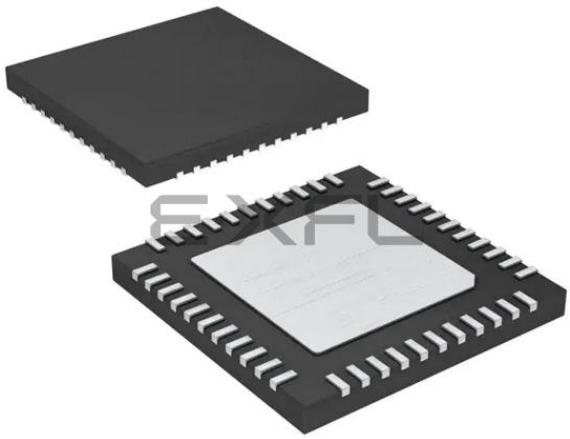

Welcome to E-XFL.COM

What is "Embedded - Microcontrollers"?

"Embedded - Microcontrollers" refer to small, integrated circuits designed to perform specific tasks within larger systems. These microcontrollers are essentially compact computers on a single chip, containing a processor core, memory, and programmable input/output peripherals. They are called "embedded" because they are embedded within electronic devices to control various functions, rather than serving as standalone computers. Microcontrollers are crucial in modern electronics, providing the intelligence and control needed for a wide range of applications.

Applications of "Embedded - Microcontrollers"

Details	
Product Status	Active
Core Processor	MIPS32® M4K™
Core Size	32-Bit Single-Core
Speed	72MHz
Connectivity	I²C, IrDA, LINbus, PMP, SPI, UART/USART
Peripherals	Brown-out Detect/Reset, DMA, HLVD, I²S, POR, PWM, WDT
Number of I/O	34
Program Memory Size	128KB (128K x 8)
Program Memory Type	FLASH
EEPROM Size	-
RAM Size	32K x 8
Voltage - Supply (Vcc/Vdd)	2.5V ~ 3.6V
Data Converters	A/D 13x10b
Oscillator Type	Internal
Operating Temperature	-40°C ~ 105°C (TA)
Mounting Type	Surface Mount
Package / Case	44-VQFN Exposed Pad
Supplier Device Package	44-QFN (8x8)
Purchase URL	https://www.e-xfl.com/product-detail/microchip-technology/pic32mx154f128dt-v-ml

TABLE 6: PIN NAMES FOR 28-PIN USB DEVICES WITHOUT VBAT

28-PIN SOIC (TOP VIEW)(1,2,3)

1 28

SOIC

PIC32MX254F128B
PIC32MX274F256B

Pin #	Full Pin Name	Pin #	Full Pin Name
1	$\overline{\text{MCLR}}$	15	VBUS
2	PGED3/VREF+/AN0/C3INC/RPA0/ASDA1/CTED1/PMD7/RA0	16	TDI/RPB7/CTED3/PMD5/INT0/RB7
3	PGEC3/VREF-/AN1/RPA1/ASCL1/CTED2/PMD6/RA1	17	TCK/RPB8/SCL1/CTED10/PMD4/RB8
4	PGED2/AN2/C1IND/C2INB/C3IND/RPB0/PMD0/RB0	18	TDO/RPB9/SDA1/CTED4/PMD3/RB9
5	PGEC2/AN3/C1INC/C2INA/LVDIN/RPB1/CTED12/PMD1//RB1	19	VSS
6	PGED1/AN4/C1INB/C2IND/RPB2/SDA2/CTED13/PMD2/RB2	20	VCAP
7	PGEC1/AN5/C1INA/C2INC/RTCC/RPB3/SCL2/PMWR/RB3	21	D+
8	VSS	22	D-
9	OSC1/CLKI/RPA2/RA2	23	VUSB3V3
10	OSC2/CLKO/RPA3/PMA0/RA3	24	AN11/RPB13/CTPLS/PMRD/RB13
11	SOSCI/RPB4/CTED11/RB4(4)	25	CVREFOUT/AN10/C3INB/RPB14/SCK1/CTED5/PMA1/RB14
12	SOSCO/RPA4/T1CK/CTED9/RA4	26	AN9/C3INA/RPB15/SCK2/CTED6/PMCS1/RB15
13	VDD	27	AVSS
14	TMS/RPB5/USBID/RB5	28	AVDD

Note 1: The RPn pins can be used by remappable peripherals. See Table 1 for the available peripherals and **12.3 "Peripheral Pin Select"** for restrictions.
2: Every I/O port pin (RAx-RBx) can be used as a change notification pin (CNAx-CNBx). See **12.0 "I/O Ports"** for more information.
3: Shaded pins are 5V tolerant.
4: This is an input-only pin.

 © 2016 Microchip Technology Inc.

TABLE 8: PIN NAMES FOR 28-PIN GENERAL PURPOSE DEVICES WITHOUT VBAT

28-PIN QFN (TOP VIEW)(1,2,3.4)

PIC32MX154F128B
PIC32MX174F256B

28 1

Pin #	Full Pin Name	Pin #	Full Pin Name
1	PGED2/AN2/C1IND/C2INB/C3IND/RPB0/RB0	15	TDO/RPB9/SDA1/CTED4/PMD3/RB9
2	PGEC2/AN3/C1INC/C2INA/LVDIN/RPB1/CTED12/RB1	16	VSS
3	AN4/C1INB/C2IND/RPB2/SDA2/CTED13/RB2	17	VCAP
4	AN5/C1INA/C2INC/RTCC/RPB3/SCL2/RB3	18	PGED1/RPB10/CTED11/PMD2/RB10
5	VSS	19	PGEC1/TMS/RPB11/PMD1/RB11
6	OSC1/CLKI/RPA2/RA2	20	AN12/PMD0/RB12
7	OSC2/CLKO/RPA3/PMA0/RA3	21	AN11/RPB13/CTPLS/PMRD/RB13
8	SOSCI/RPB4/RB4(5)	22	CVREFOUT/AN10/C3INB/RPB14/SCK1/CTED5/PMWR/RB14
9	SOSCO/RPA4/T1CK/CTED9/RA4	23	AN9/C3INA/RPB15/SCK2/CTED6/PMCS1/RB15
10	VDD	24	AVSS
11	PGED3/RPB5/ASDA2/PMD7/RB5	25	AVDD
12	PGEC3/RPB6/ASCL2/PMD6/RB6	26	$\overline{\text{MCLR}}$
13	TDI/RPB7/CTED3/PMD5/INT0/RB7	27	VREF+/AN0/C3INC/RPA0/ASDA1/CTED1/PMA1/RA0
14	TCK/RPB8/SCL1/CTED10/PMD4/RB8	28	VREF-/AN1/RPA1/ASCL1/CTED2/RA1

Note 1: The RPn pins can be used by remappable peripherals. See Table 1 for the available peripherals and **12.3 "Peripheral Pin Select"** for restrictions.
2: Every I/O port pin (RAx-RBx) can be used as a change notification pin (CNAx-CNBx). See **12.0 "I/O Ports"** for more information.
3: The metal plane at the bottom of the device is not connected to any pins and is recommended to be connected to VSS externally.
4: Shaded pins are 5V tolerant.
5: This is an input-only pin.

 © 2016 Microchip Technology Inc.

TABLE 12: PIN NAMES FOR 44-PIN GENERAL PURPOSE DEVICES WITHOUT VBAT

44-PIN QFN AND TQFP (TOP VIEW)(1,2,3,5)

PIC32MX154F128D
PIC32MX174F256D

44 1 44 1

Pin #	Full Pin Name	Pin #	Full Pin Name
1	RPB9/SDA1/CTED4/PMA7/RB9	23	AN4/C1INB/C2IND/RPB2/SDA2/CTED13/RB2
2	RPC6/PMA1/RC6	24	AN5/C1INA/C2INC/RTCC/RPB3/SCL2/PMA2/RB3
3	RPC7/PMCS1/RC7	25	AN6/RPC0/RC0
4	RPC8/PMD5/RC8	26	AN7/RPC1/RC1
5	RPC9/CTED7/PMD6/RC9	27	AN8/RPC2/PMWR/RC2
6	VSS	28	VDD
7	VCAP	29	VSS
8	PGED1/RPB10/CTED11/PMA8/RB10	30	OSC1/CLKI/RPA2/RA2
9	PGEC1/TMS/RPB11/PMA9/RB11	31	OSC2/CLKO/RPA3/RA3
10	AN12/PMD0/RB12	32	TDO/RPA8/PMD2/RA8
11	AN11/RPB13/CTPLS/PMRD/RB13	33	SOSCI/RPB4/CTED11/RB4
12	PGED4/PMA10/RA10	34	SOSCO/RPA4/T1CK/RA4
13	PGEC4/TCK/CTED8/PMD3/RA7	35	TDI/RPA9/PMD1/RA9
14	CVREFOUT/AN10/C3INB/RPB14/SCK1/CTED5/RB14	36	RPC3/RC3
15	AN9/C3INA/RPB15/SCK2/CTED6/PMA0/RB15	37	RPC4/PMD4/RC4
16	AVSS	38	RPC5/PMD7/RC5
17	AVDD	39	VSS
18	$\overline{\text{MCLR}}$	40	VDD
19	VREF+/AN0/C3INC/RPA0/ASDA1/CTED1/RA0	41	PGED3/RPB5/ASDA2/PMA3/RB5
20	VREF-/AN1/RPA1/ASCL1/CTED2/RA1	42	PGEC3/RPB6/ASCL2/PMA6/RB6
21	PGED2/AN2/C1IND/C2INB/C3IND/RPB0/RB0	43	RPB7/CTED3/PMA5/INT0/RB7
22	PGEC2/AN3/C1INC/C2INA/LVDIN/RPB1/CTED12/RB1	44	RPB8/SCL1/CTED10/PMA4/RB8

Note 1: The RPn pins can be used by remappable peripherals. See Table 1 for the available peripherals and **12.3 "Peripheral Pin Select"** for restrictions.
2: Every I/O port pin (RAx-RBx) can be used as a change notification pin (CNAx-CNBx). See **12.0 "I/O Ports"** for more information.
3: The metal plane at the bottom of the device is not connected to any pins and is recommended to be connected to VSS externally.
4: Shaded pins are 5V tolerant.

 © 2016 Microchip Technology Inc.

The MIPS architecture defines that the result of a multiply or divide operation be placed in the HI and LO registers. Using the Move-From-HI (MFHI) and Move-From-LO (MFLO) instructions, these values can be transferred to the General Purpose Register file.

In addition to the HI/LO targeted operations, the MIPS32® architecture also defines a multiply instruction, MUL, which places the least significant results in the primary register file instead of the HI/LO register pair. By avoiding the explicit MFLO instruction required when using the LO register, and by supporting multiple destination registers, the throughput of multiply-intensive operations is increased.

Two other instructions, Multiply-Add (MADD) and Multiply-Subtract (MSUB), are used to perform the multiply-accumulate and multiply-subtract operations. The MADD instruction multiplies two numbers and then adds the product to the current contents of the HI and LO registers. Similarly, the MSUB instruction multiplies two operands and then subtracts the product from the HI and LO registers. The MADD and MSUB operations are commonly used in DSP algorithms.

3.2.3 SYSTEM CONTROL COPROCESSOR (CP0)

In the MIPS architecture, CP0 is responsible for the virtual-to-physical address translation, the exception control system, the processor's diagnostics capability, the operating modes (Kernel, User and Debug) and whether interrupts are enabled or disabled. Configuration information, such as presence of options like MIPS16e, is also available by accessing the CP0 registers, listed in Table 3-2.

TABLE 3-2: COPROCESSOR 0 REGISTERS

Register Number	Register Name	Function
0-6	Reserved	Reserved in the PIC32MX1XX/2XX XLP Family core.
7	HWREna	Enables access via the RDHWR instruction to selected hardware registers.
8	BadVAddr(1)	Reports the address for the most recent address-related exception.
9	Count(1)	Processor cycle count.
10	Reserved	Reserved in the PIC32MX1XX/2XX XLP Family core.
11	Compare(1)	Timer interrupt control.
12	Status(1)	Processor status and control.
12	IntCtl(1)	Interrupt system status and control.
12	SRSCtl(1)	Shadow register set status and control.
12	SRSMap(1)	Provides mapping from vectored interrupt to a shadow set.
13	Cause(1)	Cause of last general exception.
14	EPC(1)	Program counter at last exception.
15	PRId	Processor identification and revision.
15	EBASE	Exception vector base register.
16	Config	Configuration register.
16	Config1	Configuration Register 1.
16	Config2	Configuration Register 2.
16	Config3	Configuration Register 3.
17-22	Reserved	Reserved in the PIC32MX1XX/2XX XLP Family core.
23	Debug(2)	Debug control and exception status.
24	DEPC(2)	Program counter at last debug exception.
25-29	Reserved	Reserved in the PIC32MX1XX/2XX XLP Family core.
30	ErrorEPC(1)	Program counter at last error.
31	DESAVE(2)	Debug handler scratchpad register.

Note 1: Registers used in exception processing.
2: Registers used during debug.

REGISTER 8-9: CLKDIAG: USER CLOCK DIAGNOSTIC CONTROL REGISTER

Bit Range	Bit 31/23/15/7	Bit 30/22/14/6	Bit 29/21/13/5	Bit 28/20/12/4	Bit 27/19/11/3	Bit 26/18/10/2	Bit 25/17/9/1	Bit 24/16/8/0
31:24	U-0	U-0	U-0	U-0	U-0	U-0	U-0	U-0
	—	—	—	—	—	—	—	—
23:16	U-0	U-0	U-0	U-0	U-0	U-0	U-0	U-0
	—	—	—	—	—	—	—	—
15:8	U-0	U-0	U-0	U-0	U-0	U-0	U-0	U-0
	—	—	—	—	—	—	—	—
7:0	U-0	U-0	R/W-0	R/W-0	R/W-0	R/W-0	R/W-0	R/W-0
	—	—	UPLLSTOP	SPLLSTOP	LPRCSTOP	FRCSTOP	SOSCSTOP	POSCSTOP

Legend:			
R = Readable bit	W = Writable bit	U = Unimplemented bit, read as ‘0’	
-n = Value at POR	‘1’ = Bit is set	‘0’ = Bit is cleared	x = Bit is unknown

bit 31-6 **Unimplemented:** Read as ‘0’

bit 5 **UPLLSTOP**: USB PLL (UPLL) Clock Stop Control Value bit
1 = UPLL clock source is stopped
0 = UPLL clock source runs as normal

bit 4 **SPLLSTOP:** System PLL (SPLL) Clock Stop Control Value bit
1 = SPLL clock source is stopped
0 = SPLL clock source runs as normal

bit 3 **LPRCSTOP:** Low-Power RC Oscillator (LPRC) Clock Stop Control Value bit
1 = LPRC clock source is stopped
0 = LPRC clock source runs as normal

bit 2 **FRCSTOP:** Fast RC Oscillator (FRC) Clock Stop Control Value bit
1 = FRC clock source is stopped
0 = FRC clock source runs as normal

bit 1 **SOSCSTOP:** Secondary Oscillator (SOSC) Clock Stop Control Value bit
1 = SOSC clock source is stopped
0 = SOSC clock source runs as normal

bit 0 **POSCSTOP:** Primary Oscillator (POSC) Clock Stop Control Value bit
1 = POSC clock source is stopped
0 = POSC clock source runs as normal

 © 2016 Microchip Technology Inc.

TABLE 9-3: DMA CHANNELS 0-3 REGISTER MAP (CONTINUED)

Virtual Address (BF88_#)	Register Name(1)	Bit Range	Bits 31/15	30/14	29/13	28/12	27/11	26/10	25/9	24/8	23/7	22/6	21/5	20/4	19/3	18/2	17/1	16/0	All Resets
3170	DCH1SSIZ	31:16	—	—	—	—	—	—	—	—	—	—	—	—	—	—	—	—	0000
		15:0	CHSSIZ<15:0>																0000
3180	DCH1DSIZ	31:16	—	—	—	—	—	—	—	—	—	—	—	—	—	—	—	—	0000
		15:0	CHDSIZ<15:0>																0000
3190	DCH1SPTR	31:16	—	—	—	—	—	—	—	—	—	—	—	—	—	—	—	—	0000
		15:0	CHSPTR<15:0>																0000
31A0	DCH1DPTR	31:16	—	—	—	—	—	—	—	—	—	—	—	—	—	—	—	—	0000
		15:0	CHDPTR<15:0>																0000
31B0	DCH1CSIZ	31:16	—	—	—	—	—	—	—	—	—	—	—	—	—	—	—	—	0000
		15:0	CHCSIZ<15:0>																0000
31C0	DCH1CPTR	31:16	—	—	—	—	—	—	—	—	—	—	—	—	—	—	—	—	0000
		15:0	CHCPTR<15:0>																0000
31D0	DCH1DAT	31:16	—	—	—	—	—	—	—	—	—	—	—	—	—	—	—	—	0000
		15:0	—	—	—	—	—	—	—	—	CHPDAT<7:0>								0000
31E0	DCH2CON	31:16	—	—	—	—	—	—	—	—	—	—	—	—	—	—	—	—	0000
		15:0	CHBUSY	—	—	—	—	—	—	CHCHNS	CHEN	CHAED	CHCHN	CHAEN	—	CHEDET	CHPRI<1:0>		0000
31F0	DCH2ECON	31:16	—	—	—	—	—	—	—	—	CHAIRQ<7:0>								00FF
		15:0	CHSIRQ<7:0>								CFORCE	CABORT	PATEN	SIRQEN	AIRQEN	—	—	—	FF00
3200	DCH2INT	31:16	—	—	—	—	—	—	—	—	CHSDIE	CHSHIE	CHDDIE	CHDHIE	CHBCIE	CHCCIE	CHTAIE	CHERIE	0000
		15:0	—	—	—	—	—	—	—	—	CHSDIF	CHSHIF	CHDDIF	CHDHIF	CHBCIF	CHCCIF	CHTAIF	CHERIF	0000
3210	DCH2SSA	31:16	CHSSA<31:0>																0000
		15:0																	0000
3220	DCH2DSA	31:16	CHDSA<31:0>																0000
		15:0																	0000
3230	DCH2SSIZ	31:16	—	—	—	—	—	—	—	—	—	—	—	—	—	—	—	—	0000
		15:0	CHSSIZ<15:0>																0000
3240	DCH2DSIZ	31:16	—	—	—	—	—	—	—	—	—	—	—	—	—	—	—	—	0000
		15:0	CHDSIZ<15:0>																0000
3250	DCH2SPTR	31:16	—	—	—	—	—	—	—	—	—	—	—	—	—	—	—	—	0000
		15:0	CHSPTR<15:0>																0000
3260	DCH2DPTR	31:16	—	—	—	—	—	—	—	—	—	—	—	—	—	—	—	—	0000
		15:0	CHDPTR<15:0>																0000
3270	DCH2CSIZ	31:16	—	—	—	—	—	—	—	—	—	—	—	—	—	—	—	—	0000
		15:0	CHCSIZ<15:0>																0000

Legend: x = unknown value on Reset; — = unimplemented, read as '0'. Reset values are shown in hexadecimal.

Note 1: All registers in this table have corresponding CLR, SET and INV registers at their virtual addresses, plus offsets of 0x4, 0x8 and 0xC, respectively. See **12.2 "CLR, SET and INV Registers"** for more information.

Advance Information

© 2016 Microchip Technology Inc.

REGISTER 10-1: CHECON: CACHE CONTROL REGISTER

Bit Range	Bit 31/23/15/7	Bit 30/22/14/6	Bit 29/21/13/5	Bit 28/20/12/4	Bit 27/19/11/3	Bit 26/18/10/2	Bit 25/17/9/1	Bit 24/16/8/0
31:24	U-0	U-0	U-0	U-0	U-0	U-0	U-0	U-0
	—	—	—	—	—	—	—	—
23:16	U-0	U-0	U-0	U-0	U-0	U-0	U-0	R/W-0
	—	—	—	—	—	—	—	CHECOH
15:8	U-0	U-0	U-0	U-0	U-0	U-0	R/W-0	R/W-0
	—	—	—	—	—	—	DCSZ<1:0>	
7:0	U-0	U-0	R/W-0	R/W-0	U-0	R/W-1	R/W-1	R/W-1
	—	—	PREFEN<1:0>		—	PFMWS<2:0>		

Legend:			
R = Readable bit	W = Writable bit	U = Unimplemented bit, read as ‘0’	
-n = Value at POR	‘1’ = Bit is set	‘0’ = Bit is cleared	x = Bit is unknown

bit 31-17 **Unimplemented:** Write ‘0’; ignore read

bit 16 **CHECOH:** Cache Coherency Setting on a PFM Program Cycle bit
1 = Invalidate all data and instruction lines
0 = Invalidate all data lnes and instruction lines that are not locked

bit 15-10 **Unimplemented:** Write ‘0’; ignore read

bit 9-8 **DCSZ<1:0>:** Data Cache Size in Lines bits
11 = Enable data caching with a size of 4 Lines
10 = Enable data caching with a size of 2 Lines
01 = Enable data caching with a size of 1 Line
00 = Disable data caching
Changing these bits induce all lines to be reinitialized to the “invalid” state.

bit 7-6 **Unimplemented:** Write ‘0’; ignore read

bit 5-4 **PREFEN<1:0>:** Predictive Prefetch Enable bits
11 = Enable predictive prefetch for both cacheable and non-cacheable regions
10 = Enable predictive prefetch for non-cacheable regions only
01 = Enable predictive prefetch for cacheable regions only
00 = Disable predictive prefetch

bit 3 **Unimplemented:** Write ‘0’; ignore read

bit 2-0 **PFMWS<2:0>:** PFM Access Time Defined in Terms of SYSLK Wait States bits
111 = Seven Wait states
110 = Six Wait states
101 = Five Wait states
100 = Four Wait states
011 = Three Wait states
010 = Two Wait states
001 = One Wait state
000 = Zero Wait state

TABLE 11-1: USB REGISTER MAP (CONTINUED)

Virtual Address (BF88_#)	Register Name(1)	Bit Range	Bits																All Resets
			31/15	30/14	29/13	28/12	27/11	26/10	25/9	24/8	23/7	22/6	21/5	20/4	19/3	18/2	17/1	16/0	
5390	U1EP9	31:16	—	—	—	—	—	—	—	—	—	—	—	—	—	—	—	—	0000
		15:0	—	—	—	—	—	—	—	—	—	—	—	EPCONDIS	EPRXEN	EPTXEN	EPSTALL	EPHSHK	0000
53A0	U1EP10	31:16	—	—	—	—	—	—	—	—	—	—	—	—	—	—	—	—	0000
		15:0	—	—	—	—	—	—	—	—	—	—	—	EPCONDIS	EPRXEN	EPTXEN	EPSTALL	EPHSHK	0000
53B0	U1EP11	31:16	—	—	—	—	—	—	—	—	—	—	—	—	—	—	—	—	0000
		15:0	—	—	—	—	—	—	—	—	—	—	—	EPCONDIS	EPRXEN	EPTXEN	EPSTALL	EPHSHK	0000
53C0	U1EP12	31:16	—	—	—	—	—	—	—	—	—	—	—	—	—	—	—	—	0000
		15:0	—	—	—	—	—	—	—	—	—	—	—	EPCONDIS	EPRXEN	EPTXEN	EPSTALL	EPHSHK	0000
53D0	U1EP13	31:16	—	—	—	—	—	—	—	—	—	—	—	—	—	—	—	—	0000
		15:0	—	—	—	—	—	—	—	—	—	—	—	EPCONDIS	EPRXEN	EPTXEN	EPSTALL	EPHSHK	0000
53E0	U1EP14	31:16	—	—	—	—	—	—	—	—	—	—	—	—	—	—	—	—	0000
		15:0	—	—	—	—	—	—	—	—	—	—	—	EPCONDIS	EPRXEN	EPTXEN	EPSTALL	EPHSHK	0000
53F0	U1EP15	31:16	—	—	—	—	—	—	—	—	—	—	—	—	—	—	—	—	0000
		15:0	—	—	—	—	—	—	—	—	—	—	—	EPCONDIS	EPRXEN	EPTXEN	EPSTALL	EPHSHK	0000

Legend: x = unknown value on Reset; — = unimplemented, read as '0'. Reset values are shown in hexadecimal.

Note 1: With the exception of those noted, all registers in this table (except as noted) have corresponding CLR, SET and INV registers at their virtual address, plus an offset of 0x4, 0x8, and 0xC respectively. See **12.2 "CLR, SET and INV Registers"** for more information.

2: This register does not have associated SET and INV registers.

3: This register does not have associated CLR, SET and INV registers.

4: Reset value for this bit is undefined.

TABLE 12-4: PORTB REGISTER MAP

Virtual Address (BF88_#)	Register Name	Bit Range	Bits																All Resets
			31/15	30/14	29/13	28/12	27/11	26/10	25/9	24/8	23/7	22/6	21/5	20/4	19/3	18/2	17/1	16/0	
6100	ANSELB	31:16	—	—	—	—	—	—	—	—	—	—	—	—	—	—	—	—	0000
		15:0	ANSB15	ANSB14	ANSB13(3)	ANSB12(2)	—	—	—	—	—	—	—	—	ANSB3	ANSB2	ANSB1	ANSB0	E00F
6110	TRISB	31:16	—	—	—	—	—	—	—	—	—	—	—	—	—	—	—	—	0000
		15:0	TRISB15	TRISB14	TRISB13(3)	TRISB12(2)	TRISB11(2)	TRISB10(2)	TRISB9	TRISB8	TRISB7	TRISB6(2)	TRISB5	TRISB4	TRISB3	TRISB2	TRISB1	TRISB0	FFFF
6120	PORTB	31:16	—	—	—	—	—	—	—	—	—	—	—						0000
		15:0	RB15	RB14	RB13(3)	RB12(2)	RB11(2)	RB10(2)	RB9	RB8	RB7	RC6(2)	RB5	RB4	RB3	RB2	RB1	RB0	xxxx
6130	LATB	31:16	—	—	—	—	—	—	—	—	—	—	—	—	—	—	—	—	0000
		15:0	LATB15	LATB14	LATB13(3)	LATB12(2)	LATB11(2)	LATB10(2)	LATB9	LATB8	LATB7	LATB6(2)	LATB5	LATB4	LATB3	LATB2	LATB1	LATB0	xxxx
6140	ODCB	31:16	—	—	—	—	—	—	—	—	—	—	—	—	—	—	—	—	0000
		15:0	ODCB15	ODCB14	ODCB13(3)	ODCB12(2)	ODCB11(2)	ODCB10(2)	ODCB9	ODCB8	ODCB7	ODCB6	ODCB5	ODCB4	ODCB3	ODCB2	ODCB1	ODCB0	0000
6150	CNPUB	31:16	—	—	—	—	—	—	—	—	—	—	—	—	—	—	—	—	0000
		15:0	CNPUB15	CNPUB14	CNPUB13(3)	CNPUB12(2)	CNPUB11(2)	CNPUB10(2)	CNPUB9	CNPUB8	CNPUB7	CNPUB6(2)	CNPUB5	CNPUB4	CNPUB3	CNPUB2	CNPUB1	CNPUB0	0000
6160	CNPDB	31:16	—	—	—	—	—	—	—	—	—	—	—	—	—	—	—	—	0000
		15:0	CNPDB15	CNPDB14	CNPDB13	CNPDB12(2)	CNPDB11(2)	CNPDB10(2)	CNPDB9	CNPDB8	CNPDB7	CNPDB6(2)	CNPDB5	CNPDB4	CNPDB3	CNPDB2	CNPDB1	CNPDB0	0000
6170	CNCONB	31:16	—	—	—	—	—	—	—	—	—	—	—	—	—	—	—	—	0000
		15:0	ON	—	SIDL	—	—	—	—	—	—	—	—	—	—	—	—	—	0000
6180	CNENB	31:16	—	—	—	—	—	—	—	—	—	—	—	—	—	—	—	—	0000
		15:0	CNIEB15	CNIEB14	CNIEB13(3)	CNIEB11(2)	CNIEB11(2)	CNIEB10(2)	CNIEB9	CNIEB8	CNIEB7	CNIEB6(2)	CNIEB5	CNIEB4	CNIEB3	CNIEB2	CNIEB1	CNIEB0	0000
6190	CNSTATB	31:16	—	—	—	—	—	—	—	—	—	—	—	—	—	—	—	—	0000
		15:0	CN STATB15	CN STATB14	CN STATB13(3)	CN STATB12(2)	CN STATB11(2)	CN STATB10(2)	CN STATB9	CN STATB8	CN STATB7	CN STATB6(2)	CN STATB5	CN STATB4	CN STATB3	CN STATB2	CN STATB1	CN STATB0	0000

Legend: x = unknown value on Reset; — = unimplemented, read as '0'. Reset values are shown in hexadecimal.

Note 1: All registers in this table have corresponding CLR, SET and INV registers at their virtual addresses, plus offsets of 0x4, 0x8 and 0xC, respectively. See **12.2 "CLR, SET and INV Registers"** for more information.

2: This bit is not available on USB devices.

3: This bit is not available on VBAT devices.

© 2016 Microchip Technology Inc.

17.1 Input Capture Control Registers

TABLE 17-1: INPUT CAPTURE 1-INPUT CAPTURE 5 REGISTER MAP

Virtual Address (BF80_#)	Register Name	Bit Range	Bits																All Resets
			31/15	30/14	29/13	28/12	27/11	26/10	25/9	24/8	23/7	22/6	21/5	20/4	19/3	18/2	17/1	16/0	
2000	IC1CON(1)	31:16	—	—	—	—	—	—	—	—	—	—	—	—	—	—	—	—	0000
		15:0	ON	—	SIDL	—	—	—	FEDGE	C32	ICTMR	ICI<1:0>		ICOV	ICBNE	ICM<2:0>			0000
2010	IC1BUF	31:16	IC1BUF<31:0>																xxxx
		15:0																	xxxx
2200	IC2CON(1)	31:16	—	—	—	—	—	—	—	—	—	—	—	—	—	—	—	—	0000
		15:0	ON	—	SIDL	—	—	—	FEDGE	C32	ICTMR	ICI<1:0>		ICOV	ICBNE	ICM<2:0>			0000
2210	IC2BUF	31:16	IC2BUF<31:0>																xxxx
		15:0																	xxxx
2400	IC3CON(1)	31:16	—	—	—	—	—	—	—	—	—	—	—	—	—	—	—	—	0000
		15:0	ON	—	SIDL	—	—	—	FEDGE	C32	ICTMR	ICI<1:0>		ICOV	ICBNE	ICM<2:0>			0000
2410	IC3BUF	31:16	IC3BUF<31:0>																xxxx
		15:0																	xxxx
2600	IC4CON(1)	31:16	—	—	—	—	—	—	—	—	—	—	—	—	—	—	—	—	0000
		15:0	ON	—	SIDL	—	—	—	FEDGE	C32	ICTMR	ICI<1:0>		ICOV	ICBNE	ICM<2:0>			0000
2610	IC4BUF	31:16	IC4BUF<31:0>																xxxx
		15:0																	xxxx
2800	IC5CON(1)	31:16	—	—	—	—	—	—	—	—	—	—	—	—	—	—	—	—	0000
		15:0	ON	—	SIDL	—	—	—	FEDGE	C32	ICTMR	ICI<1:0>		ICOV	ICBNE	ICM<2:0>			0000
2810	IC5BUF	31:16	IC5BUF<31:0>																xxxx
		15:0																	xxxx

Legend: x = unknown value on Reset; — = unimplemented, read as '0'. Reset values are shown in hexadecimal.

Note 1: This register has corresponding CLR, SET and INV registers at its virtual address, plus an offset of 0x4, 0x8 and 0xC, respectively. See **12.2 "CLR, SET and INV Registers"** for more information.

Advance Information

© 2016 Microchip Technology Inc.

21.0 UNIVERSAL ASYNCHRONOUS RECEIVER TRANSMITTER (UART)

Note: This data sheet summarizes the features of the PIC32MX1XX/2XX 28/44-pin XLP Family of devices. It is not intended to be a comprehensive reference source. To complement the information in this data sheet, refer to **Section 21. "Universal Asynchronous Receiver Transmitter (UART)"** (DS60001107), which is available from the *Documentation > Reference Manual* section of the Microchip PIC32 web site (www.microchip.com/pic32).

The UART module is one of the serial I/O modules available in PIC32MX1XX/2XX 28/44-pin XLP Family devices. The UART is a full-duplex, asynchronous communication channel that communicates with peripheral devices and personal computers through protocols, such as RS-232, RS-485, LIN, and IrDA®. The UART module also supports the hardware flow control option, with $\overline{\text{UxCTS}}$ and $\overline{\text{UxRTS}}$ pins, and also includes an IrDA encoder and decoder.

The following are key features of the UART module:

- Full-duplex, 8-bit or 9-bit data transmission
- Even, Odd or No Parity options (for 8-bit data)
- One or two Stop bits
- Hardware auto-baud feature
- Hardware flow control option
- Fully integrated Baud Rate Generator (BRG) with 16-bit prescaler
- Baud rates ranging from 33.4 bps to 17.5 Mbps at 72 MHz
- 8-level deep First In First Out (FIFO) transmit data buffer
- 8-level deep FIFO receive data buffer
- Parity, framing and buffer overrun error detection
- Support for interrupt-only on address detect (9th bit = 1)
- Separate transmit and receive interrupts
- Loopback mode for diagnostic support
- LIN protocol support
- IrDA encoder and decoder with 16x baud clock output for external IrDA encoder/decoder support
- Auto-baud support
- Ability to receive data during Sleep mode

Figure 21-1 illustrates a simplified block diagram of the UART module.

FIGURE 21-1: UART SIMPLIFIED BLOCK DIAGRAM

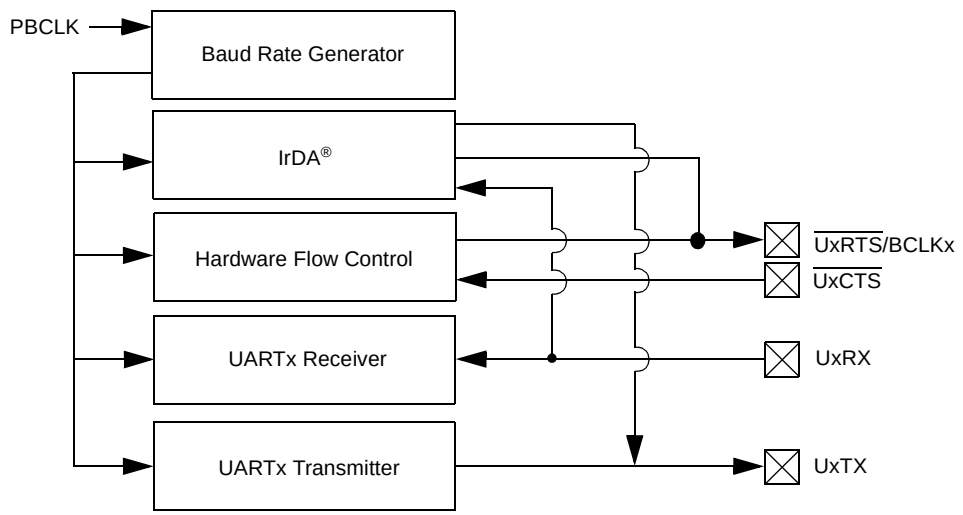

Note: Not all pins are available for all UART modules. Refer to the device-specific pin diagram for more information.

REGISTER 23-4: RTCDATE: RTC DATE VALUE REGISTER

Bit Range	Bit 31/23/15/7	Bit 30/22/14/6	Bit 29/21/13/5	Bit 28/20/12/4	Bit 27/19/11/3	Bit 26/18/10/2	Bit 25/17/9/1	Bit 24/16/8/0
31:24	R/W-x	R/W-x	R/W-x	R/W-x	R/W-x	R/W-x	R/W-x	R/W-x
	YEAR10<3:0>				YEAR01<3:0>			
23:16	U-0	U-0	U-0	R/W-x	R/W-x	R/W-x	R/W-x	R/W-x
	—	—	—	MONTH10	MONTH01<3:0>			
15:8	U-0	U-0	R/W-x	R/W-x	R/W-x	R/W-x	R/W-x	R/W-x
	—	—	DAY10<1:0>		DAY01<3:0>			
7:0	U-0	U-0	U-0	U-0	U-0	R/W-x	R/W-x	R/W-x
	—	—	—	—	—	WDAY01<2:0>		

Legend:			
R = Readable bit	W = Writable bit	U = Unimplemented bit, read as ‘0’	
-n = Value at POR	‘1’ = Bit is set	‘0’ = Bit is cleared	x = Bit is unknown

bit 31-28 **YEAR10<3:0>:** Binary-Coded Decimal Value of Years bits, 10s place digit; contains a value from 0 to 9

bit 27-24 **YEAR01<3:0>:** Binary-Coded Decimal Value of Years bits, 1s place digit; contains a value from 0 to 9

bit 23-21 **Unimplemented:** Read as ‘0’

bit 20 **MONTH10:** Binary-Coded Decimal Value of Months bits, 10s place digit; contains a value of 0 or 1

bit 19-16 **MONTH01<3:0>:** Binary-Coded Decimal Value of Months bits, 1s place digit; contains a value from 0 to 9

bit 15-14 **Unimplemented:** Read as ‘0’

bit 13-12 **DAY10<1:0>:** Binary-Coded Decimal Value of Days bits, 10s place digit; contains a value of 0 to 3

bit 11-8 **DAY01<3:0>:** Binary-Coded Decimal Value of Days bits, 1s place digit; contains a value from 0 to 9

bit 7-3 **Unimplemented:** Read as ‘0’

bit 2-0 **WDAY01<2:0>:** Binary-Coded Decimal Value of Weekdays bits; contains a value from 0 to 6

Note: This register is only writable when RTCWREN = 1 (RTCCON<3>).

REGISTER 23-5: ALRMTIME: ALARM TIME VALUE REGISTER

Bit Range	Bit 31/23/15/7	Bit 30/22/14/6	Bit 29/21/13/5	Bit 28/20/12/4	Bit 27/19/11/3	Bit 26/18/10/2	Bit 25/17/9/1	Bit 24/16/8/0
31:24	U-0	U-0	R/W-x	R/W-x	R/W-x	R/W-x	R/W-x	R/W-x
	—	—	HR10<1:0>		HR01<3:0>			
23:16	U-0	R/W-x	R/W-x	R/W-x	R/W-x	R/W-x	R/W-x	R/W-x
	—	MIN10<2:0>			MIN01<3:0>			
15:8	U-0	R/W-x	R/W-x	R/W-x	R/W-x	R/W-x	R/W-x	R/W-x
	—	SEC10<2:0>			SEC01<3:0>			
7:0	U-0	U-0	U-0	U-0	U-0	U-0	U-0	U-0
	—	—	—	—	—	—	—	—

Legend:			
R = Readable bit	W = Writable bit	U = Unimplemented bit, read as ‘0’	
-n = Value at POR	‘1’ = Bit is set	‘0’ = Bit is cleared	x = Bit is unknown

bit 31-30 **Unimplemented:** Read as ‘0’
bit 29-28 **HR10<1:0>:** Binary Coded Decimal value of hours bits, 10s place digit; contains a value from 0 to 2
bit 27-24 **HR01<3:0>:** Binary Coded Decimal value of hours bits, 1s place digit; contains a value from 0 to 9
bit 23 **Unimplemented:** Read as ‘0’
bit 22-20 **MIN10<2:0>:** Binary Coded Decimal value of minutes bits, 10s place digit; contains a value from 0 to 5
bit 19-16 **MIN01<3:0>:** Binary Coded Decimal value of minutes bits, 1s place digit; contains a value from 0 to 9
bit 15 **Unimplemented:** Read as ‘0’
bit 14-12 **SEC10<2:0>:** Binary Coded Decimal value of seconds bits, 10s place digit; contains a value from 0 to 5
bit 11-8 **SEC01<3:0>:** Binary Coded Decimal value of seconds bits, 1s place digit; contains a value from 0 to 9
bit 7-0 **Unimplemented:** Read as ‘0’

 © 2016 Microchip Technology Inc.

NOTES:

 © 2016 Microchip Technology Inc.

25.0 COMPARATOR

Note: This data sheet summarizes the features of the PIC32MX1XX/2XX 28/44-pin XLP Family of devices. It is not intended to be a comprehensive reference source. To complement the information in this data sheet, refer to **Section 19. "Comparator"** (DS60001110), which is available from the *Documentation > Reference Manual* section of the Microchip PIC32 web site (www.microchip.com/pic32).

The Analog Comparator module contains three comparators that can be configured in a variety of ways.

The following are key features of the Comparator module:

- Selectable inputs available include:
  - Analog inputs multiplexed with I/O pins
  - On-chip internal absolute voltage reference (IVREF)
  - Comparator voltage reference (CVREF)
- Outputs can be Inverted
- Selectable interrupt generation

A block diagram of the comparator module is provided in Figure 25-1.

FIGURE 25-1: COMPARATOR BLOCK DIAGRAM

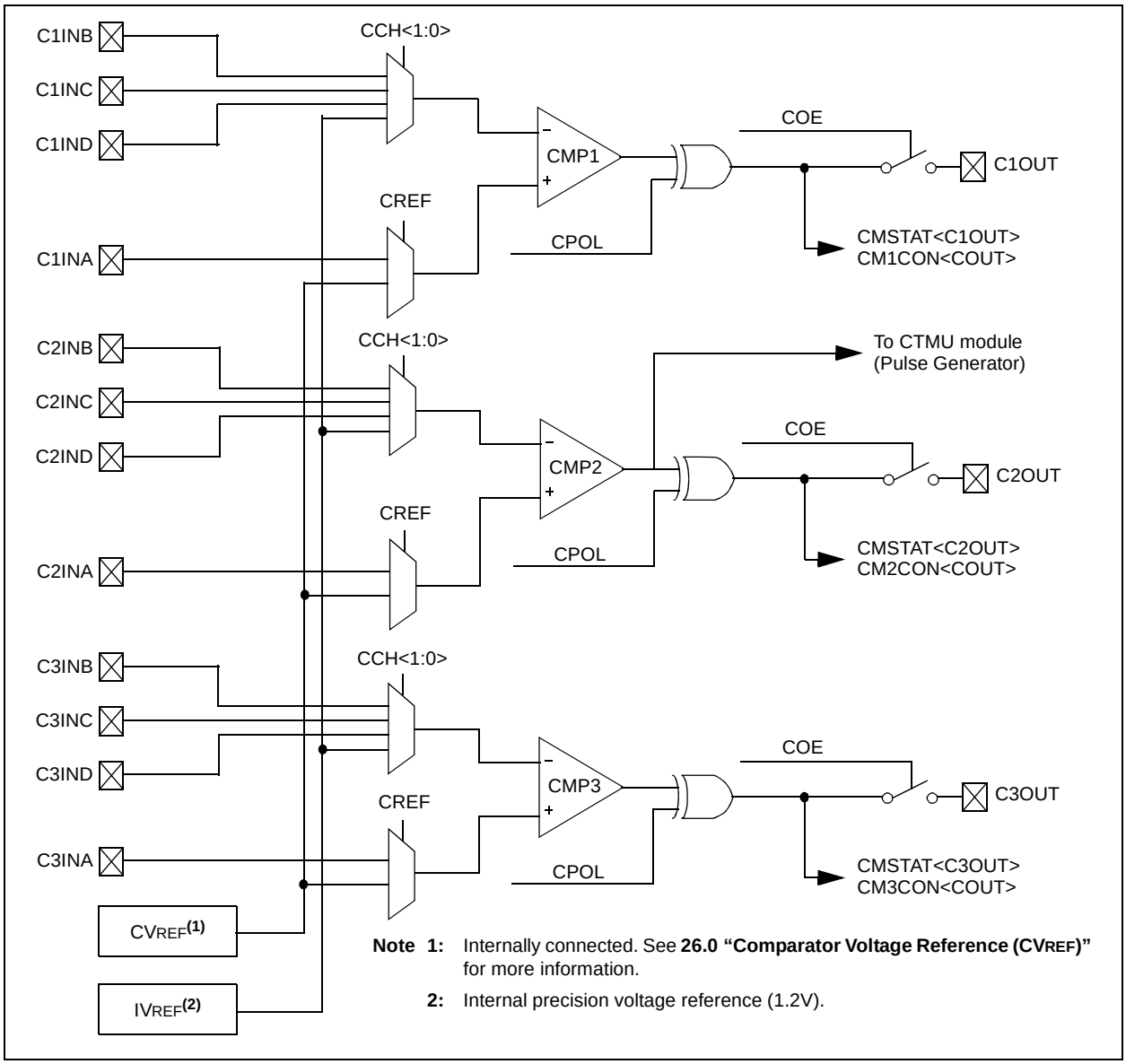

Note 1: Internally connected. See **26.0 "Comparator Voltage Reference (CVREF)"** for more information.

2: Internal precision voltage reference (1.2V).

REGISTER 29-3: DSGPRX: DEEP SLEEP PERSISTENT GENERAL PURPOSE REGISTER 'x' (x = 0 THROUGH 32)

Bit Range	Bit 31/23/15/7	Bit 30/22/14/6	Bit 29/21/13/5	Bit 28/20/12/4	Bit 27/19/11/3	Bit 26/18/10/2	Bit 25/17/9/1	Bit 24/16/8/0
31:24	R/W-x	R/W-x	R/W-x	R/W-x	R/W-x	R/W-x	R/W-x	R/W-x
	Deep Sleep Persistent General Purpose bits							
23:16	R/W-x	R/W-x	R/W-x	R/W-x	R/W-x	R/W-x	R/W-x	R/W-x
	Deep Sleep Persistent General Purpose bits							
15:8	R/W-x	R/W-x	R/W-x	R/W-x	R/W-x	R/W-x	R/W-x	R/W-x
	Deep Sleep Persistent General Purpose bits							
7:0	R/W-x	R/W-x	R/W-x	R/W-x	R/W-x	R/W-x	R/W-x	R/W-x
	Deep Sleep Persistent General Purpose bits							

Legend:			
R = Readable bit	W = Writable bit	U = Unimplemented bit, read as '0'	
-n = Value at POR	'1' = Bit is set	'0' = Bit is cleared	x = Bit is unknown

bit 31-0 **Deep Sleep Persistent General Purpose bits**

Note: The contents of the DSGPR0 register are retained, even in Deep Sleep and VBAT modes. The DSPGR1 through DSPGR32 registers are disabled by default in Deep Sleep and VBAT modes, but can be enabled with the DSGPREN bit (DSCON<13>). All register bits are reset only in the case of a VDD Power-on Reset (POR) event outside of Deep Sleep mode.

 © 2016 Microchip Technology Inc.

TABLE 33-9: DC CHARACTERISTICS: POWER-DOWN CURRENT (I_{PD})

DC CHARACTERISTICS			Standard Operating Conditions: 2.5V to 3.6V (unless otherwise stated) Operating temperature -40°C ≤ TA ≤ +85°C for Industrial -40°C ≤ TA ≤ +105°C for V-Temp		
Param. No.	**Typical(2)**	**Maximum**	**Units**	**Conditions**	
Power-Down Current (I_{PD}) (Note 1)					
DC40k	—	—	μA	-40°C	Sleep **(Note 1)**
DC40l	25	42	μA	+25°C	
DC40m	240	390	μA	+85°C	
DC40n	—	—	μA	+105°C	
DC41k	—	—	nA	-40°C	Deep Sleep **(Note 5)**
DC41l	673	800	nA	+25°C	
DC41m	—	—	nA	+85°C	
DC41n	—	—	nA	+105°C	
DC42k	—	—	nA	-40°C	V_{BAT} **(Note 6)**
DC42l	—	—	nA	+25°C	
DC42m	—	—	nA	+85°C	
DC42n	—	—	nA	+105°C	
Module Differential Current					
DC44a	5	—	μA	3.6V	Watchdog Timer Current: ΔI_{WDT} **(Note 3)**
DC44b	23	—	μA	3.6V	RTCC + Timer1 w/32 kHz Crystal: ΔI_{RTCC} + ΔI_{TMR} **(Note 3)**
DC44c	1000	—	mA	3.6V	ADC Current: ΔI_{ADC} **(Notes 3, 4)**
DC44d	15	—	μA	3.6V	Deadman Timer Current: ΔI_{DMT}
DC44e	0.71	—	μA	3.6V	Deep Sleep Watchdog Timer Current: ΔI_{DSWDT} **(Note 3)**
DC44f	0.8	—	μA	3.6V	RTCC Current: ΔI_{RTCC} **(Note 3)**

Note 1: The test conditions for I_{PD} current measurements are as follows:
- Oscillator mode is EC (for 8 MHz and below) and EC+PLL (for above 8 MHz) with OSC1 driven by external square wave from rail-to-rail, (OSC1 input clock input over/undershoot < 100 mV required)
- OSC2/CLKO is configured as an I/O input pin
- USB PLL is disabled (USBMD = 1), V_{USB3V3} is connected to V_{SS}
- CPU is in Sleep mode
- L1 Cache and Prefetch modules are disabled
- No peripheral modules are operating, (ON bit = 0), and the associated PMD bit is set. All clocks are disabled ON bit (PBxDIV<15>) = 0 (x ≠ 1,7)
- WDT, DMT, Clock Switching, Fail-Safe Clock Monitor, and Secondary Oscillator are disabled
- All I/O pins are configured as inputs and pulled to V_{SS}
- $\overline{MCLR}$ = V_{DD}
- RTCC and JTAG are disabled
- Voltage regulator is in Stand-by mode (VREGS = 0; IOANCPEN = 0)

2: Data in the "Typical" column is at 3.3V, +25°C unless otherwise stated. Parameters are for design guidance only and are not tested.

3: The Δ current is the additional current consumed when the module is enabled. This current should be added to the base I_{PD} current.

4: Voltage regulator is operational (VREGS = 1).

5: The test conditions for Deep Sleep mode current measurements are as follows:
- All I/O pins are configured as inputs and pulled to V_{SS}
- DSBOREN, DSWDTEN, and DGPREN are set to '0' and RTCDIS is set to '1'

6: The test conditions for VBAT mode current measurements is as follows:
- VBATBOREN is set to '0'

FIGURE 33-13: SPIx MODULE SLAVE MODE (CKE = 1) TIMING CHARACTERISTICS

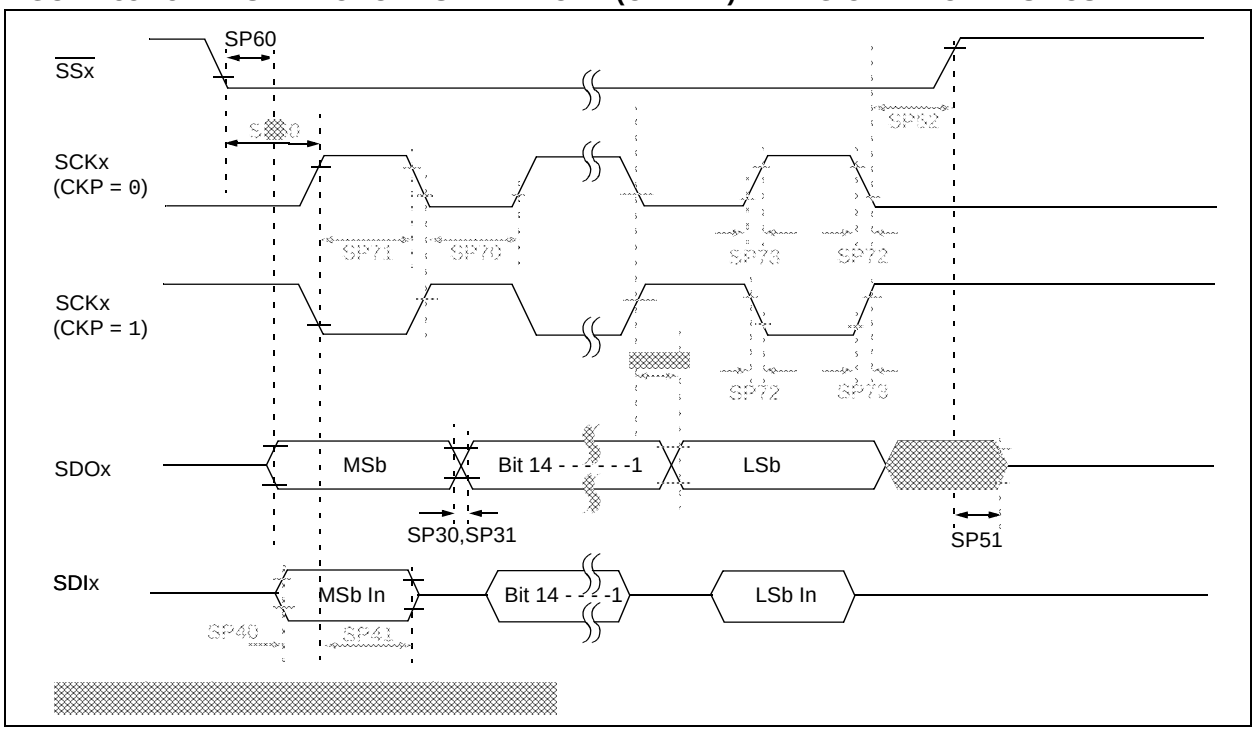

TABLE 33-32: SPIx MODULE SLAVE MODE (CKE = 1) TIMING REQUIREMENTS

AC CHARACTERISTICS			Standard Operating Conditions: 2.5V to 3.6V (unless otherwise stated) Operating temperature -40°C ≤ TA ≤ +85°C for Industrial -40°C ≤ TA ≤ +105°C for V-temp				
Param. No.	**Symbol**	**Characteristics(1)**	**Min.**	**Typical(2)**	**Max.**	**Units**	**Conditions**
SP70	TscL	SCKx Input Low Time **(Note 3)**	Tsck/2	—	—	ns	—
SP71	TscH	SCKx Input High Time **(Note 3)**	Tsck/2	—	—	ns	—
SP72	TscF	SCKx Input Fall Time	—	5	10	ns	—
SP73	TscR	SCKx Input Rise Time	—	5	10	ns	—
SP30	TdoF	SDOx Data Output Fall Time **(Note 4)**	—	—	—	ns	See parameter DO32
SP31	TdoR	SDOx Data Output Rise Time **(Note 4)**	—	—	—	ns	See parameter DO31
SP35	TscH2doV, TscL2doV	SDOx Data Output Valid after SCKx Edge	—	—	20	ns	VDD > 2.7V
			—	—	30	ns	VDD < 2.7V
SP40	TdiV2scH, TdiV2scL	Setup Time of SDIx Data Input to SCKx Edge	10	—	—	ns	—
SP41	TscH2diL, TscL2diL	Hold Time of SDIx Data Input to SCKx Edge	10	—	—	ns	—
SP50	TssL2scH, TssL2scL	$\overline{SSx}$ ↓ to SCKx ↓ or SCKx ↑ Input	175	—	—	ns	—

Note 1: These parameters are characterized, but not tested in manufacturing.

2: Data in “Typical” column is at 3.3V, 25°C unless otherwise stated. Parameters are for design guidance only and are not tested.

3: The minimum clock period for SCKx is 50 ns.

4: Assumes 50 pF load on all SPIx pins.

 © 2016 Microchip Technology Inc.

TABLE 33-38: PARALLEL SLAVE PORT REQUIREMENTS

AC CHARACTERISTICS			Standard Operating Conditions: 2.5V to 3.6V (unless otherwise stated) Operating temperature -40°C ≤ TA ≤ +85°C for Industrial -40°C ≤ TA ≤ +105°C for V-temp				
Param.No.	**Symbol**	**Characteristics(1)**	**Min.**	**Typ.**	**Max.**	**Units**	**Conditions**
PS1	TdtV2wrH	Data In Valid before $\overline{WR}$ or $\overline{CS}$ Inactive (setup time)	20	—	—	ns	—
PS2	TwrH2dtI	$\overline{WR}$ or $\overline{CS}$ Inactive to Data-In Invalid (hold time)	40	—	—	ns	—
PS3	TrdL2dtV	$\overline{RD}$ and $\overline{CS}$ Active to Data-Out Valid	—	—	60	ns	—
PS4	TrdH2dtI	$\overline{RD}$ Active or $\overline{CS}$ Inactive to Data-Out Invalid	0	—	10	ns	—
PS5	Tcs	$\overline{CS}$ Active Time	TPB + 40	—	—	ns	—
PS6	TWR	$\overline{WR}$ Active Time	TPB + 25	—	—	ns	—
PS7	TRD	$\overline{RD}$ Active Time	TPB + 25	—	—	ns	—

Note 1: These parameters are characterized, but not tested in manufacturing.

FIGURE 33-21: PARALLEL MASTER PORT READ TIMING DIAGRAM

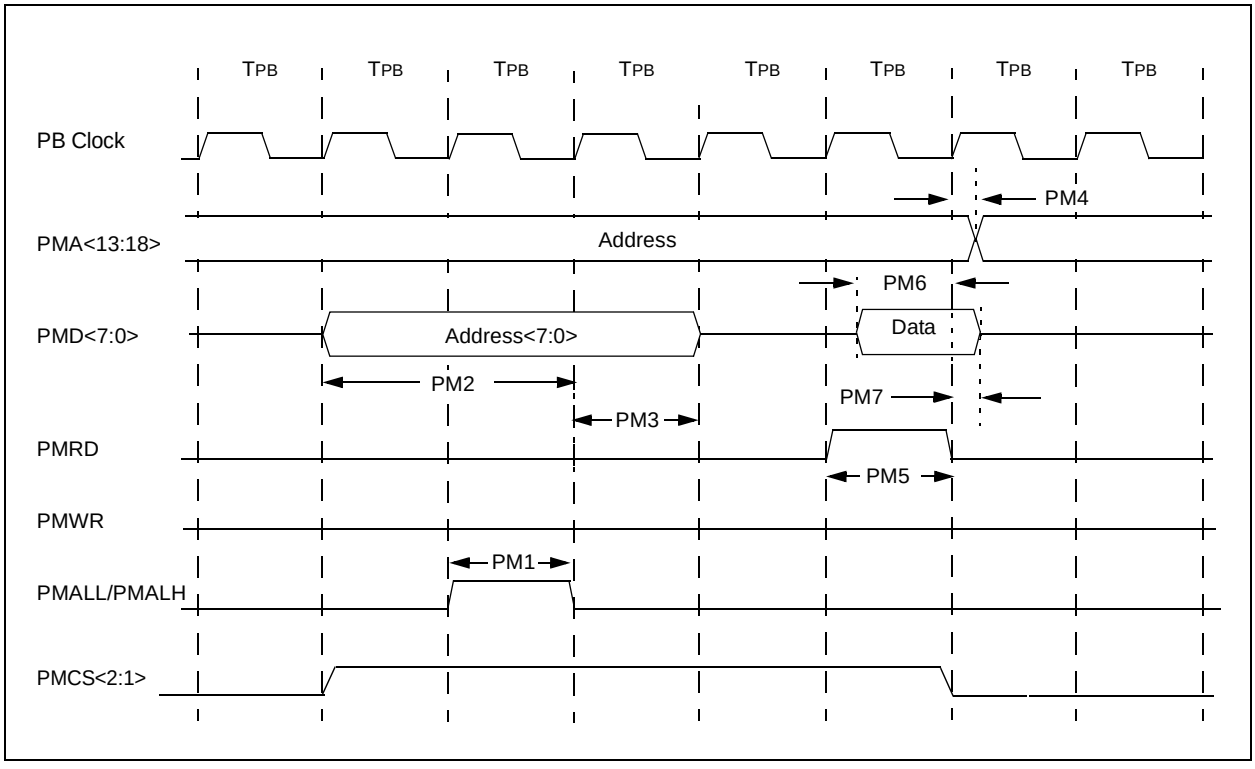

 © 2016 Microchip Technology Inc.

NOTES:

 © 2016 Microchip Technology Inc.