Welcome to E-XFL.COM

What is "Embedded - Microcontrollers"?

"Embedded - Microcontrollers" refer to small, integrated circuits designed to perform specific tasks within larger systems. These microcontrollers are essentially compact computers on a single chip, containing a processor core, memory, and programmable input/output peripherals. They are called "embedded" because they are embedded within electronic devices to control various functions, rather than serving as standalone computers. Microcontrollers are crucial in modern electronics, providing the intelligence and control needed for a wide range of applications.

Applications of "Embedded - Microcontrollers"

Details	
Product Status	Obsolete
Core Processor	8052
Core Size	8-Bit
Speed	40MHz
Connectivity	EBI/EMI, UART/USART
Peripherals	POR, WDT
Number of I/O	36
Program Memory Size	32KB (32K x 8)
Program Memory Type	FLASH
EEPROM Size	-
RAM Size	512 x 8
Voltage - Supply (Vcc/Vdd)	4.5V ~ 5.5V
Data Converters	-
Oscillator Type	Internal
Operating Temperature	0°C ~ 70°C (TA)
Mounting Type	Surface Mount
Package / Case	44-BQFP
Supplier Device Package	-
Purchase URL	https://www.e-xfl.com/product-detail/nuvoton-technology-corporation-america/w78e058b40fl

1. GENERAL DESCRIPTION

The W78E058B is an 8-bit microcontroller which has an in-system programmable Flash EPROM for firmware updating. The instruction set of the W78E058B is fully compatible with the standard 8052. The W78E058B contains a 32K bytes of main ROM and a 4K bytes of auxiliary ROM which allows the contents of the 32KB main ROM to be updated by the loader program located at the 4KB auxiliary ROM; 512 bytes of on-chip RAM; four 8-bit bi-directional and bit-addressable I/O ports; an additional 4-bit port P4; three 16-bit timer/counters; a serial port. These peripherals are supported by a eight sources two-level interrupt capability. To facilitate programming and verification, the ROM inside the W78E058B allows the program memory to be programmed and read electronically. Once the code is confirmed, the user can protect the code for security.

The W78E058B microcontroller has two power reduction modes, idle mode and power-down mode, both of which are software selectable. The idle mode turns off the processor clock but allows for continued peripheral operation. The power-down mode stops the crystal oscillator for minimum power consumption. The external clock can be stopped at any time and in any state without affecting the processor.

2. FEATURES

- Fully static design 8-bit CMOS microcontroller
- 32K bytes of in-system programmable Flash EPROM for Application Program (APROM)
- 4K bytes of auxiliary ROM for Loader Program (LDROM)
- 512 bytes of on-chip RAM (including 256 bytes of AUX-RAM, software selectable)
- 64K bytes program memory address space and 64K bytes data memory address space
- Four 8-bit bi-directional ports
- One 4-bit multipurpose programmable port
- Three 16-bit timer/counters
- One full duplex serial port
- Eight-sources, two-level interrupt capability
- Built-in power management
- Code protection
- Packaged in
  - Lead Free (RoHS) DIP 40: W78E058B40DL
  - Lead Free (RoHS) PLCC 44: W78E058B40PL
  - Lead Free (RoHS) PQFP 44: W78E058B40FL

5.3 Clock

The W78E058B is designed with either a crystal oscillator or an external clock. Internally, the clock is divided by two before it is used by default. This makes the W78E058B relatively insensitive to duty cycle variations in the clock.

5.4 Crystal Oscillator

The W78E058B incorporates a built-in crystal oscillator. To make the oscillator work, a crystal must be connected across pins XTAL1 and XTAL2. In addition, a load capacitor must be connected from each pin to ground.

5.5 External Clock

An external clock should be connected to pin XTAL1. Pin XTAL2 should be left unconnected. The XTAL1 input is a CMOS-type input, as required by the crystal oscillator.

5.6 Power Management

Idle Mode

Setting the IDL bit in the PCON register enters the idle mode. In the idle mode, the internal clock to the processor is stopped. The peripherals and the interrupt logic continue to be clocked. The processor will exit idle mode when either an interrupt or a reset occurs.

Power-down Mode

When the PD bit in the PCON register is set, the processor enters the power-down mode. In this mode all of the clocks are stopped, including the oscillator. To exit from power-down mode is by a hardware reset or external interrupts $\overline{\text{INT0}}$ to $\overline{\text{INT1}}$ when enabled and set to level triggered.

5.7 Reduce EMI Emission

The W78E058B allows user to diminish the gain of on-chip oscillator amplifier by using programmer to clear the B7 bit of security register. Once B7 is set to 0, a half of gain will be decreased. Care must be taken if user attempts to diminish the gain of oscillator amplifier, reducing a half of gain may affect the external crystal operating improperly at high frequency. The value of C1 and C2 may need some adjustment while running at lower gain.

5.8 Reset

The external RESET signal is sampled at S5P2. To take effect, it must be held high for at least two machine cycles while the oscillator is running. An internal trigger circuit in the reset line is used to deglitch the reset line when the W78E058B is used with an external RC network. The reset logic also has a special glitch removal circuit that ignores glitches on the reset line. During reset, the ports are initialized to FFH, the stack pointer to 07H, PCON (with the exception of bit 4) to 00H, and all of the other SFR registers except SBUF to 00H. SBUF is not reset.

W78E058B Special Function Registers (SFRs) and Reset Values

F8									FF
F0	+B 00000000						CHPENR 00000000		F7
E8									EF
E0	+ACC 00000000								E7
D8	+P4 xxxx1111								DF
D0	+PSW 00000000								D7
C8	+T2CON 00000000		RCAP2L 00000000	RCAP2H 00000000	TL2 00000000	TH2 00000000			CF
C0	XICON 00000000		P4CONA 00000000	P4CONB 00000000	SFRAL 00000000	SFRAH 00000000	SFRFD 00000000	SFRCN 00000000	C7
B8	+IP 00000000							CHPCON 0xx00000	BF
B0	+P3 00000000				P43AL 00000000	P43AH 00000000			B7
A8	+IE 00000000				P42AL 00000000	P42AH 00000000	P2ECON 0000xx00		AF
A0	+P2 11111111								A7
98	+SCON 00000000	SBUF xxxxxxxx							9F
90	+P1 11111111				P41AL 00000000	P41AH 00000000			97
88	+TCON 00000000	TMOD 00000000	TL0 00000000	TL1 00000000	TH0 00000000	TH1 00000000			8F
80	+P0 11111111	SP 00000111	DPL 00000000	DPH 00000000	P40AL 00000000	P40AH 00000000		PCON 00110000	87

Notes:

1.The SFRs marked with a plus sign(+) are both byte- and bit-addressable.

2. The text of SFR with bold type characters are extension function registers.

Eight-source interrupt information

INTERRUPT SOURCE	VECTOR ADDRESS	POLLING SEQUENCE WITHIN PRIORITY LEVEL	ENABLE REQUIRED SETTINGS	INTERRUPT TYPE EDGE/LEVEL
External Interrupt 0	03H	0 (highest)	IE.0	TCON.0
Timer/Counter 0	0BH	1	IE.1	-
External Interrupt 1	13H	2	IE.2	TCON.2
Timer/Counter 1	1BH	3	IE.3	-
Serial Port	23H	4	IE.4	-
Timer/Counter 2	2BH	5	IE.5	-
External Interrupt 2	33H	6	XICON.2	XICON.0
External Interrupt 3	3BH	7 (lowest)	XICON.6	XICON.3

P4CONB (C3H)

BIT	NAME	FUNCTION
7, 6	P43FUN1 P43FUN0	00: Mode 0. P4.3 is a general purpose I/O port which is the same as Port1. 01: Mode 1. P4.3 is a Read Strobe signal for chip select purpose. The address range depends on the SFR P43AH, P43AL, P43CMP1 and P43CMP0. 10: Mode 2. P4.3 is a Write Strobe signal for chip select purpose. The address range depends on the SFR P43AH, P43AL, P43CMP1 and P43CMP0. 11: Mode 3. P4.3 is a Read/Write Strobe signal for chip select purpose. The address range depends on the SFR P43AH, P43AL, P43CMP1, and P43CMP0.
5, 4	P43CMP1 P43CMP0	Chip-select signals address comparison: 00: Compare the full address (16 bits length) with the base address register P43AH, P43AL. 01: Compare the 15 high bits (A15 – A1) of address bus with the base address register P43AH, P43AL. 10: Compare the 14 high bits (A15 – A2) of address bus with the base address register P43AH, P43AL. 11: Compare the 8 high bits (A15 – A8) of address bus with the base address register P43AH, P43AL.
3, 2	P42FUN1 P42FUN0	The P4.2 function control bits which are the similar definition as P43FUN1, P43FUN0.
1, 0	P42CMP1 P42CMP0	The P4.2 address comparator length control bits which are the similar definition as P43CMP1, P43CMP0.

P4CONA (C2H)

BIT	NAME	FUNCTION
7, 6	P41FUN1 P41FUN0	The P4.1 function control bits which are the similar definition as P43FUN1, P43FUN0.
5, 4	P41CMP1 P41CMP0	The P4.1 address comparator length control bits which are the similar definition as P43CMP1, P43CMP0.
3, 2	P40FUN1 P40FUN0	The P4.0 function control bits which are the similar definition as P43FUN1, P43FUN0.
1, 0	P40CMP1 P40CMP0	The P4.0 address comparator length control bits which are the similar definition as P43CMP1, P43CMP0.

P2ECON (AEH)

BIT	NAME	FUNCTION
7	P43CSINV	The active polarity of P4.3 when pin P4.3 is defined as read and/or write strobe signal. 1: P4.3 is active high when pin P4.3 is defined as read and/or write strobe signal. 0: P4.3 is active low when pin P4.3 is defined as read and/or write strobe signal.
6	P42CSINV	The similarity definition as P43SINV.
5	P41CSINV	The similarity definition as P43SINV.
4	P40CSINV	The similarity definition as P43SINV.
3	-	Reserve
2	-	Reserve
1	-	0
0	-	0

5.11 Port 4 Base Address Registers

P40AH, P40AL

The Base address register for comparator of P4.0. P40AH contains the high-order byte of address, P40AL contains the low-order byte of address.

P41AH, P41AL

The Base address register for comparator of P4.1. P41AH contains the high-order byte of address, P41AL contains the low-order byte of address.

P42AH, P42AL

The Base address register for comparator of P4.2. P42AH contains the high-order byte of address, P42AL contains the low-order byte of address.

P43AH, P43AL

The Base address register for comparator of P4.3. P43AH contains the high-order byte of address, P43AL contains the low-order byte of address.

P4 (D8H)

BIT	NAME	FUNCTION
7	-	Reserve
6	-	Reserve
5	-	Reserve
4	-	Reserve
3	P43	Port 4 Data bit which outputs to pin P4.3 at mode 0.
2	P42	Port 4 Data bit. which outputs to pin P4.2 at mode 0.
1	P41	Port 4 Data bit. which outputs to pin P4.1at mode 0.
0	P40	Port 4 Data bit which outputs to pin P4.0 at mode 0.

Here is an example to program the P4.0 as a write strobe signal at the I/O port address 1234H –1237H and positive polarity, and P4.1 – P4.3 are used as general I/O ports.

```
MOV  P40AH, #12H
MOV  P40AL, #34H            ; Base I/O address 1234H for P4.0
MOV  P4CONA, #00001010B     ; P4.0 a write strobe signal and address line A0 and A1 are masked.
MOV  P4CONB, #00H           ; P4.1 – P4.3 as general I/O port which are the same as PORT1
MOV  P2ECON, #10H           ; Write the P40SINV = 1 to inverse the P4.0 write strobe polarity
                            ; default is negative.
```

Then any instruction MOVX @DPTR, A (with DPTR = 1234H – 1237H) will generate the positive polarity write strobe signal at pin P4.0. And the instruction MOV P4, #XX will output the bit3 to bit1 of data #XX to pin P4.3 – P4.1.

applications, the in-system programming feature make it possible to easily update the system firmware without opening the chassis.

SFRAH, SFRAL: The objective address of on-chip ROM in the in-system programming mode. SFRAH contains the high-order byte of address, SFRAL contains the low-order byte of address.

SFRFD: The programming data for on-chip ROM in programming mode.

SFRCN: The control byte of on-chip ROM programming mode.

SFRCN (C7)

BIT	NAME	FUNCTION
7	-	Reserve.
6	WFWIN	On-chip ROM bank select for in-system programming. 0: 32K bytes ROM bank is selected as destination for re-programming. 1: 4K bytes ROM bank is selected as destination for re-programming.
5	OEN	ROM output enable.
4	CEN	ROM chip enable.
3, 2, 1, 0	CTRL [3:0]	The flash control signals

MODE	WFWIN	CTRL<3:0>	OEN	CEN	SFRAH, SFRAL	SFRFD
Erase 32KB APROM	0	0010	1	0	X	X
Program 32KB APROM	0	0001	1	0	Address in	Data in
Read 32KB APROM	0	0000	0	0	Address in	Data out
Erase 4KB LDROM	1	0010	1	0	X	X
Program 4KB LDROM	1	0001	1	0	Address in	Data in
Read 4KB LDROM	1	0000	0	0	Address in	Data out

F04KBOOT Mode

P4.3	P2.7	P2.6	MODE
X	L	L	FO4KBOOT
L	X	X	FO4KBOOT

The Reset Timing For Entering F04KBOOT Mode

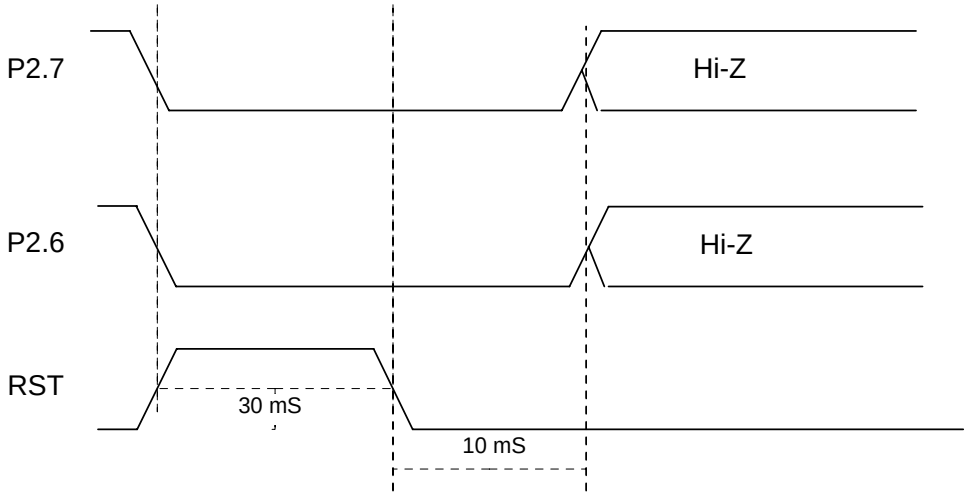

6. SECURITY

During the on-chip ROM programming mode, the ROM can be programmed and verified repeatedly. Until the code inside the ROM is confirmed OK, the code can be protected. The protection of ROM and those operations on it are described below.

The W78E058B has a Security Register that can be accessed in programming mode. Those bits of the Security Registers can not be changed once they have been programmed from high to low. They can only be reset through erase-all operation. The Security Register is located at the 0FFFFH of the LDROM space.

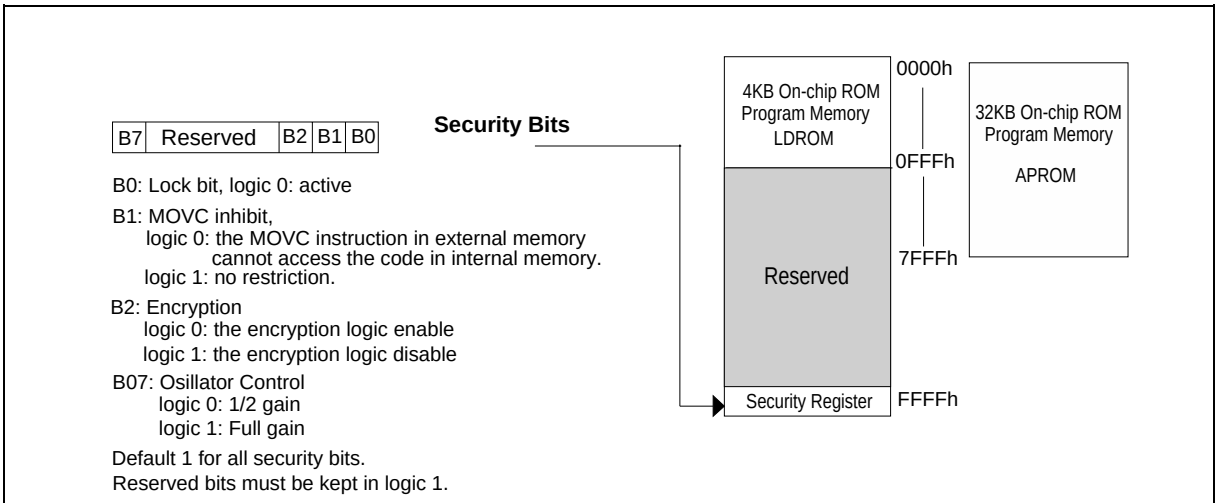

Special Setting Register

6.1 Lock Bit

This bit is used to protect the customer's program code in the W78E058B. It may be set after the programmer finishes the programming and verifies sequence. Once this bit is set to logic 0, both the ROM data and Security Register can not be accessed again.

6.2 MOVC Inhibit

This bit is used to restrict the accessible region of the MOVC instruction. It can prevent the MOVC instruction in external program memory from reading the internal program code. When this bit is set to logic 0, a MOVC instruction in external program memory space will be able to access code only in the external memory, not in the internal memory. A MOVC instruction in internal program memory space will always be able to access the ROM data in both internal and external memory. If this bit is logic 1, there are no restrictions on the MOVC instruction.

6.3 Encryption

This bit is used to enable/disable the encryption logic for code protection. Once encryption feature is enabled, the data presented on port 0 will be encoded via encryption logic. Only whole chip erase will reset this bit.

6.4 Oscillator Control

W78E058B/E516 allow user to diminish the gain of on-chip oscillator amplifier by using programmer to set the bit B7 of security register. Once B7 is set to 0, a half of gain will be decreased. Care must be taken if user attempts to diminish the gain of oscillator amplifier, reducing a half of gain may improperly affect the external crystal operation at high frequency above 24 MHz. The value of R and C1, C2 may need some adjustment while running at lower gain.

7. ELECTRICAL CHARACTERISTICS

7.1 Absolute Maximum Ratings

PARAMETER	SYMBOL	MIN.	MAX.	UNIT
DC Power Supply	$V_{DD} - V_{SS}$	-0.3	+6.0	V
Input Voltage	V_{IN}	V_{SS} -0.3	V_{DD} +0.3	V
Operating Temperature	T_A	0	70	°C
Storage Temperature	T_{ST}	-55	+150	°C

Note: Exposure to conditions beyond those listed under Absolute Maximum Ratings may adversely affect the life and reliability of the device.

7.2 D.C. Characteristics

(VDD–VSS = 5V ±10%, TA = 25° C, Fosc = 20 MHz, unless otherwise specified.)

PARAMETER	SYM.	SPECIFICATION			TEST CONDITIONS
		MIN.	MAX.	UNIT	
Operating Voltage	V_{DD}	4.5	5.5	V	RST = 1, P0 = V_{DD}
Operating Current	I_{DD}	-	20	mA	No load V_{DD} = 5.5V
Idle Current	I_{IDLE}	-	6	mA	Idle mode V_{DD} = 5.5V
Power Down Current	I_{PWDN}	-	50	μA	Power-down mode V_{DD} = 5.5V
Input Current P1, P2, P3, P4	I_{IN1}	-50	+10	μA	V_{DD} = 5.5V V_{IN} = 0V or V_{DD}
Input Current RST	I_{IN2}	-10	+300	μA	V_{DD} = 5.5V 0V < V_{IN} < V_{DD}
Input Leakage Current P0, $\overline{EA}$	I_{LK}	-10	+10	μA	V_{DD} = 5.5V 0V < V_{IN} < V_{DD}
Logic 1 to 0 Transition Current P1, P2, P3, P4	I_{TL} [*4]	-500	-	μA	V_{DD} = 5.5V V_{IN} = 2.0V
Input Low Voltage P0, P1, P2, P3, P4, $\overline{EA}$	VIL1	0	0.8	V	VDD = 4.5V
Input Low Voltage RST	V IL2	0	0.8	V	VDD = 4.5V

D.C. Characteristics, continued

PARAMETER	SYM.	SPECIFICATION			TEST CONDITIONS
		MIN.	MAX.	UNIT	
Input Low Voltage XTAL1[*4]	V_{IL3}	0	0.8	V	V_{DD} = 4.5V
Input High Voltage P0, P1, P2, P3, P4, $\overline{EA}$	V_{IH1}	2.4	V_{DD} +0.2	V	V_{DD} = 5.5V
Input High Voltage RST	V_{IH2}	3.5	V_{DD} +0.2	V	V_{DD} = 5.5V
Input High Voltage XTAL1[*4]	V_{IH3}	3.5	V_{DD} +0.2	V	V_{DD} = 5.5V
Output Low Voltage P1, P2, P3, P4	V_{OL1}	-	0.45	V	V_{DD} = 4.5V I_{OL} = +2 mA
Output Low Voltage P0, ALE, $\overline{PSEN}$ [*3]	V_{OL2}	-	0.45	V	V_{DD} = 4.5V I_{OL} = +4 mA
Sink current P1, P3, P4	Isk1	4	12	mA	V_{DD} = 4.5V V_{IN} = 0.45V
Sink current P0, P2, ALE, $\overline{PSEN}$	Isk2	10	20	mA	V_{DD} = 4.5V V_{IN} = 0.45V
Output High Voltage P1, P2, P3, P4	V_{OH1}	2.4	-	V	V_{DD} = 4.5V I_{OH} = -100 μA
Output High Voltage P0, ALE, $\overline{PSEN}$ [*3]	V_{OH2}	2.4	-	V	V_{DD} = 4.5V I_{OH} = -400 μA
Source Current P1, P2, P3, P4	Isr1	-120	-250	μA	V_{DD} = 4.5V V_{IN} = 2.4V
Source Current P0, P2, ALE, $\overline{PSEN}$	Isr2	-8	-20	mA	V_{DD} = 4.5V V_{IN} = 2.4V

Notes:

*1. RST pin is a Schmitt trigger input.

*2. P0, ALE and $\overline{PSEN}$ are tested in the external access mode.

*3. XTAL1 is a CMOS input.

*4. Pins of P1, P2, P3, P4 can source a transition current when they are being externally driven from 1 to 0.

7.3 A.C. Characteristics

The AC specifications are a function of the particular process used to manufacture the part, the ratings of the I/O buffers, the capacitive load, and the internal routing capacitance. Most of the specifications can be expressed in terms of multiple input clock periods (T_{CP}), and actual parts will usually experience less than a ±20 nS variation. The numbers below represent the performance expected from a 0.6 micron CMOS process when using 2 and 4 mA output buffers.

7.3.1 Clock Input Waveform

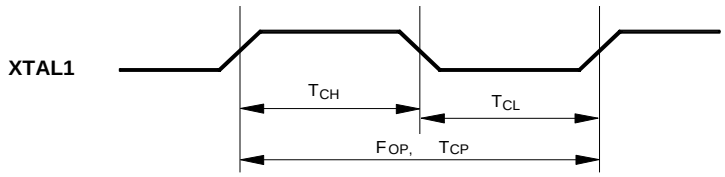

PARAMETER	SYMBOL	MIN.	TYP.	MAX.	UNIT	NOTES
Operating Speed	F_{OP}	0	-	40	MHz	1
Clock Period	T_{CP}	25	-	-	nS	2
Clock High	T_{CH}	10	-	-	nS	3
Clock Low	T_{CL}	10	-	-	nS	3

Notes:

1. The clock may be stopped indefinitely in either state.
2. The T_{CP} specification is used as a reference in other specifications.
3. There are no duty cycle requirements on the XTAL1 input.

7.3.2 Program Fetch Cycle

PARAMETER	SYMBOL	MIN.	TYP.	MAX.	UNIT	NOTES
Address Valid to ALE Low	T_{AAS}	1 T_{CP}-Δ	-	-	nS	4
Address Hold from ALE Low	T_{AAH}	1 T_{CP}-Δ	-	-	nS	1, 4
ALE Low to $\overline{PSEN}$ Low	T_{APL}	1 T_{CP}-Δ	-	-	nS	4
$\overline{PSEN}$ Low to Data Valid	T_{PDA}	-	-	2 T_{CP}	nS	2
Data Hold after $\overline{PSEN}$ High	T_{PDH}	0	-	1 T_{CP}	nS	3
Data Float after $\overline{PSEN}$ High	T_{PDZ}	0	-	1 T_{CP}	nS	
ALE Pulse Width	T_{ALW}	2 T_{CP}-Δ	2 T_{CP}	-	nS	4
$\overline{PSEN}$ Pulse Width	T_{PSW}	3 T_{CP}-Δ	3 T_{CP}	-	nS	4

Notes:

1. P0.0 – P0.7, P2.0 – P2.7 remain stable throughout entire memory cycle.
2. Memory access time is 3 T_{CP}.
3. Data have been latched internally prior to $\overline{PSEN}$ going high.
4. "Δ" (due to buffer driving delay and wire loading) is 20 nS.

8. TIMING WAVEFORMS

8.1 Program Fetch Cycle

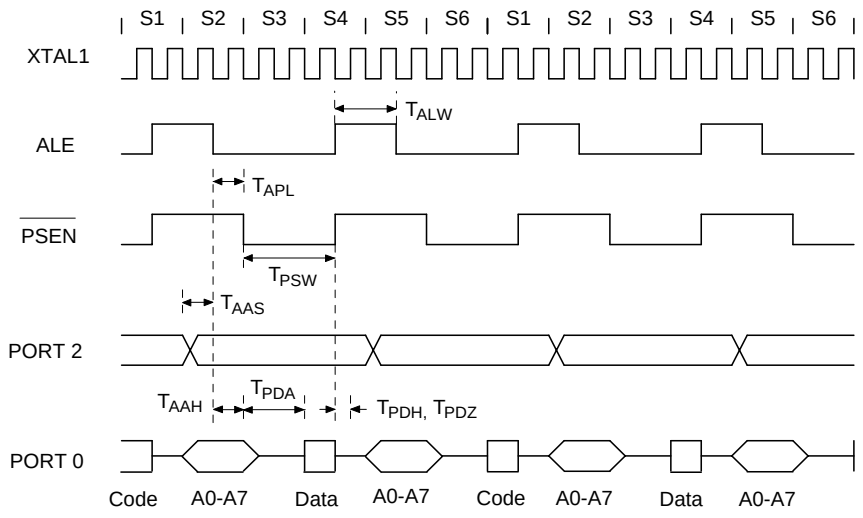

8.2 Data Read Cycle

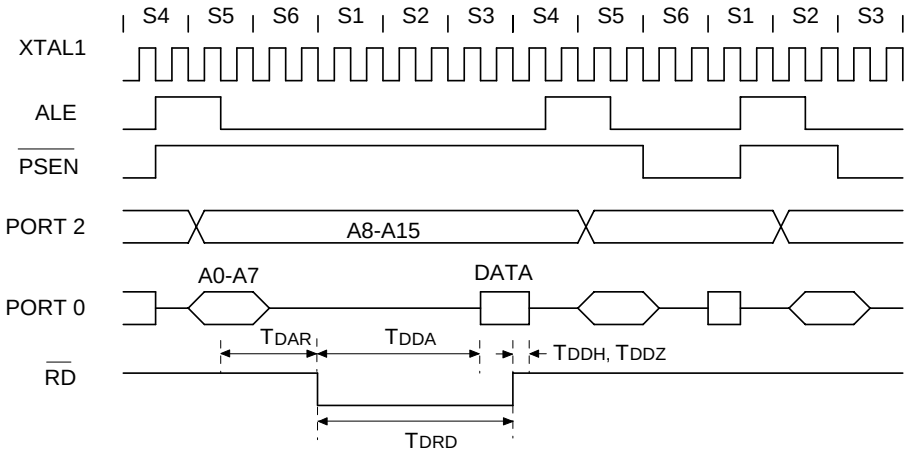
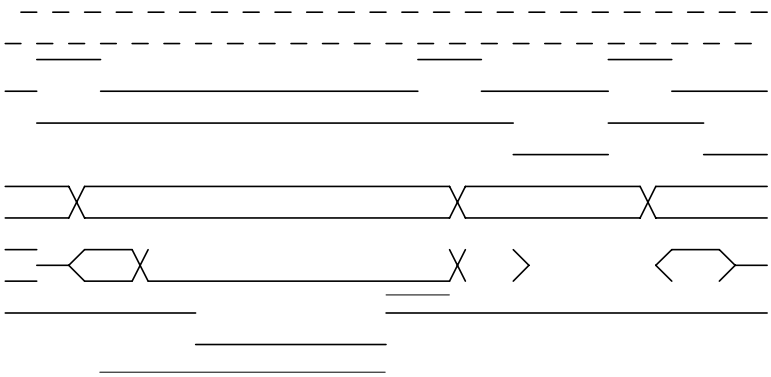
8.3 Data Write Cycle