Microchip Technology - PIC32MZ0512EFE100-E/PF Datasheet

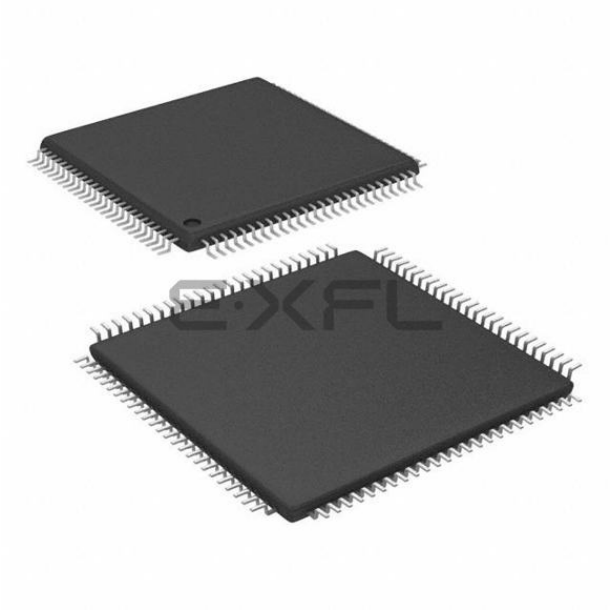

Welcome to E-XFL.COM

What is "Embedded - Microcontrollers"?

"Embedded - Microcontrollers" refer to small, integrated circuits designed to perform specific tasks within larger systems. These microcontrollers are essentially compact computers on a single chip, containing a processor core, memory, and programmable input/output peripherals. They are called "embedded" because they are embedded within electronic devices to control various functions, rather than serving as standalone computers. Microcontrollers are crucial in modern electronics, providing the intelligence and control needed for a wide range of applications.

Applications of "Embedded - Microcontrollers"

Details	
Product Status	Active
Core Processor	MIPS32® M-Class
Core Size	32-Bit Single-Core
Speed	180MHz
Connectivity	EBI/EMI, Ethernet, I²C, PMP, SPI, SQI, UART/USART, USB OTG
Peripherals	Brown-out Detect/Reset, DMA, I²S, POR, PWM, WDT
Number of I/O	78
Program Memory Size	512KB (512K x 8)
Program Memory Type	FLASH
EEPROM Size	-
RAM Size	128K x 8
Voltage - Supply (Vcc/Vdd)	2.1V ~ 3.6V
Data Converters	A/D 40x12b
Oscillator Type	Internal
Operating Temperature	-40°C ~ 125°C
Mounting Type	Surface Mount
Package / Case	100-TQFP
Supplier Device Package	100-TQFP (14x14)
Purchase URL	https://www.e-xfl.com/product-detail/microchip-technology/pic32mz0512efe100-e-pf

TABLE 1-4: OC1 THROUGH OC9 PINOUT I/O DESCRIPTIONS

Pin Name	Pin Number				Pin Type	Buffer Type	Description
	64-pin QFN/ TQFP	100-pin TQFP	124-pin VTLA	144-pin TQFP/ LQFP			
Output Compare							
OC1	PPS	PPS	PPS	PPS	O	—	Output Compare Outputs 1-9
OC2	PPS	PPS	PPS	PPS	O	—	
OC3	PPS	PPS	PPS	PPS	O	—	
OC4	PPS	PPS	PPS	PPS	O	—	
OC5	PPS	PPS	PPS	PPS	O	—	
OC6	PPS	PPS	PPS	PPS	O	—	
OC7	PPS	PPS	PPS	PPS	O	—	
OC8	PPS	PPS	PPS	PPS	O	—	
OC9	PPS	PPS	PPS	PPS	O	—	
OCFA	PPS	PPS	PPS	PPS	I	ST	Output Compare Fault A Input
OCFB	30	44	B24	62	I	ST	Output Compare Fault B Input

Legend: CMOS = CMOS-compatible input or output; Analog = Analog input; P = Power
ST = Schmitt Trigger input with CMOS levels; O = Output; I = Input
TTL = Transistor-transistor Logic input buffer; PPS = Peripheral Pin Select

TABLE 1-5: EXTERNAL INTERRUPTS PINOUT I/O DESCRIPTIONS

Pin Name	Pin Number				Pin Type	Buffer Type	Description
	64-pin QFN/ TQFP	100-pin TQFP	124-pin VTLA	144-pin TQFP/ LQFP			
External Interrupts							
INT0	46	71	A48	104	I	ST	External Interrupt 0
INT1	PPS	PPS	PPS	PPS	I	ST	External Interrupt 1
INT2	PPS	PPS	PPS	PPS	I	ST	External Interrupt 2
INT3	PPS	PPS	PPS	PPS	I	ST	External Interrupt 3
INT4	PPS	PPS	PPS	PPS	I	ST	External Interrupt 4

Legend: CMOS = CMOS-compatible input or output; Analog = Analog input; P = Power
ST = Schmitt Trigger input with CMOS levels; O = Output; I = Input
TTL = Transistor-transistor Logic input buffer; PPS = Peripheral Pin Select

REGISTER 3-2: CONFIG1: CONFIGURATION REGISTER 1; CP0 REGISTER 16, SELECT 1

Bit Range	Bit 31/23/15/7	Bit 30/22/14/6	Bit 29/21/13/5	Bit 28/20/12/4	Bit 27/19/11/3	Bit 26/18/10/2	Bit 25/17/9/1	Bit 24/16/8/0
31:24	r-1	R-0	R-0	R-1	R-1	R-1	R-1	R-0
	—	MMU Size<5:0>						IS<2>
23:16	R-1	R-0	R-0	R-1	R-1	R-0	R-1	R-1
	IS<1:0>		IL<2:0>			IA<2:0>		
15:8	R-0	R-0	R-0	R-0	R-1	R-1	R-0	R-1
	DS<2:0>			DL<2:0>			DA<2:1>	
7:0	R-1	U-0	U-0	R-1	R-1	R-0	R-1	R-1
	DA<0>	—	—	PC	WR	CA	EP	FP

Legend:	r = Reserved bit		
R = Readable bit	W = Writable bit	U = Unimplemented bit, read as ‘0’	
-n = Value at POR	‘1’ = Bit is set	‘0’ = Bit is cleared	x = Bit is unknown

bit 31 **Reserved:** This bit is hardwired to a ‘1’ to indicate the presence of the Config2 register.

bit 30-25 **MMU Size<5:0>:** Contains the number of TLB entries minus 1
`001111` = 16 TLB entries

bit 24-22 **IS<2:0>:** Instruction Cache Sets bits
`010` = Contains 256 instruction cache sets per way

bit 21-19 **IL<2:0>:** Instruction-Cache Line bits
`011` = Contains instruction cache line size of 16 bytes

bit 18-16 **IA<2:0:** Instruction-Cache Associativity bits
`011` = Contains 4-way instruction cache associativity

bit 15-13 **DS<2:0>:** Data-Cache Sets bits
`000` = Contains 64 data cache sets per way

bit 12-10 **DL<2:0>:** Data-Cache Line bits
`011` = Contains data cache line size of 16 bytes

bit 9-7 **DA<2:0>:** Data-Cache Associativity bits
`011` = Contains the 4-way set associativity for the data cache

bit 6-5 **Unimplemented:** Read as ‘`0`’

bit 4 **PC:** Performance Counter bit
`1` = The processor core contains Performance Counters

bit 3 **WR:** Watch Register Presence bit
`1` = No Watch registers are present

bit 2 **CA:** Code Compression Implemented bit
`0` = No MIPS16e® present

bit 1 **EP:** EJTAG Present bit
`1` = Core implements EJTAG

bit 0 **FP:** Floating Point Unit bit
`1` = Floating Point Unit is present

© 2015-2016 Microchip Technology Inc.

FIGURE 4-1: MEMORY MAP FOR DEVICES WITH 512 KB OF PROGRAM MEMORY(1,2)

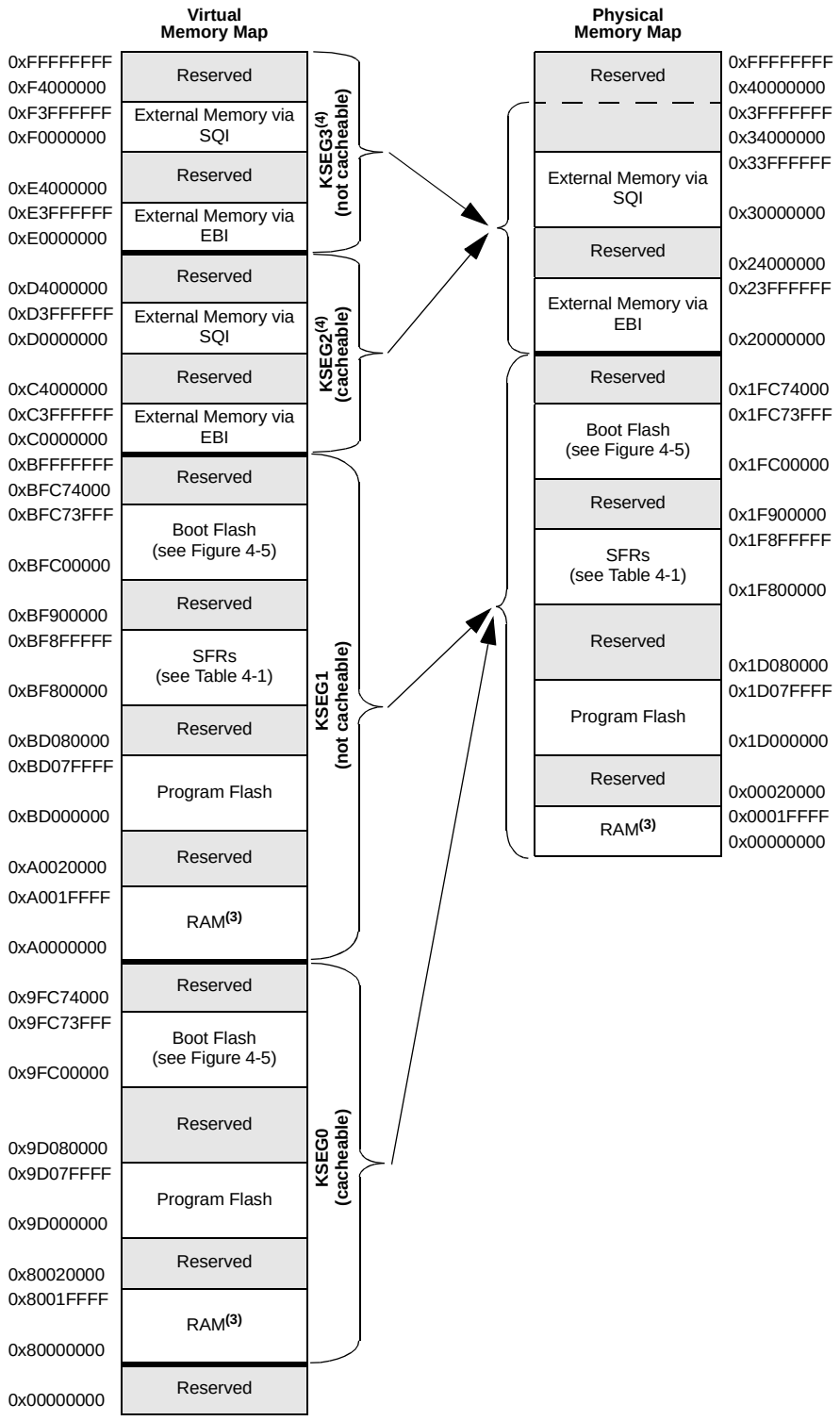

Note 1: Memory areas are not shown to scale.
2: The Cache, MMU, and TLB are initialized by compiler start-up code.
3: RAM memory is divided into two equal banks: RAM Bank 1 and RAM Bank 2 on a half boundary.
4: The MMU must be enabled and the TLB must be set up to access this segment.

© 2015-2016 Microchip Technology Inc.

7.1 CPU Exceptions

CPU coprocessor 0 contains the logic for identifying and managing exceptions. Exceptions can be caused by a variety of sources, including boundary cases in data, external events or program errors. Table 7-1 lists the exception types in order of priority.

TABLE 7-1: MIPS32® M-CLASS MICROPROCESSOR CORE EXCEPTION TYPES

Exception Type (In Order of Priority)	Description	Branches to	Status Bits Set	Debug Bits Set	EXCCODE	XC32 Function Name
Highest Priority						
Reset	Assertion $\overline{\text{MCLR}}$ or a Power-on Reset (POR).	0xBFC0_0000	BEV, ERL	—	—	`_on_reset`
Soft Reset	Assertion of a software Reset.	0xBFC0_0000	BEV, SR, ERL	—	—	`_on_reset`
DSS	EJTAG debug single step.	0xBFC0_0480	—	DSS	—	—
DINT	EJTAG debug interrupt. Caused by the assertion of the external EJ_DINT input or by setting the EjtagBrk bit in the ECR register.	0xBFC0_0480	—	DINT	—	—
NMI	Assertion of NMI signal.	0xBFC0_0000	BEV, NMI, ERL	—	—	`_nmi_handler`
Machine Check	TLB write that conflicts with an existing entry.	EBASE+0x180	MCHECK, EXL	—	0x18	`_general_exception_handler`
Interrupt	Assertion of unmasked hardware or software interrupt signal.	See Table 7-2.	IPL<2:0>	—	0x00	See Table 7-2.
Deferred Watch	Deferred watch (unmasked by K|DM=>!(K|DM) transition).	EBASE+0x180	WP, EXL	—	0x17	`_general_exception_handler`
DIB	EJTAG debug hardware instruction break matched.	0xBFC0_0480	—	DIB	—	—
WATCH	A reference to an address that is in one of the Watch registers (fetch).	EBASE+0x180	EXL	—	0x17	`_general_exception_handler`
AdEL	Fetch address alignment error. Fetch reference to protected address.	EBASE+0x180	EXL	—	0x04	`_general_exception_handler`
TLBL	Fetch TLB miss or fetch TLB hit to page with V = 0.	EBASE if Status.EXL = 0	—	—	0x02	—
		EBASE+0x180 if Status.EXL == 1	—	—	0x02	`_general_exception_handler`
TLBL Execute Inhibit	An instruction fetch matched a valid TLB entry that had the XI bit set.	EBASE+0x180	EXL	—	0x14	`_general_exception_handler`
IBE	Instruction fetch bus error.	EBASE+0x180	EXL	—	0x06	`_general_exception_handler`

© 2015-2016 Microchip Technology Inc.

TABLE 7-3: INTERRUPT REGISTER MAP (CONTINUED)

Virtual Address (BF81_#)	Register Name(1)	Bit Range	Bits																All Resets
			31/15	30/14	29/13	28/12	27/11	26/10	25/9	24/8	23/7	22/6	21/5	20/4	19/3	18/2	17/1	16/0	
03D0	IPC41	31:16	—	—	—	FCEIP<2:0>			FCEIS<1:0>		—	—	—	RTCCIP<2:0>			RTCCIS<1:0>		0000
		15:0	—	—	—	SPI4TXIP<2:0>			SPI4TXIS<1:0>		—	—	—	SPI4RXIP<2:0>			SPI4RXIS<1:0>		0000
03E0	IPC42	31:16	—	—	—	U4RXIP<2:0>			U4RXIS<1:0>		—	—	—	U4EIP<2:0>			U4EIS<1:0>		0000
		15:0	—	—	—	SQI1IP<2:0>			SQI1IS<1:0>		—	—	—	PREIP<2:0>			PREIS<1:0>		0000
03F0	IPC43	31:16	—	—	—	I2C4MIP<2:0>			I2C4MIS<1:0>		—	—	—	I2C4SIP<2:0>			I2C4SIS<1:0>		0000
		15:0	—	—	—	I2C4BIP<2:0>			I2C4BIS<1:0>		—	—	—	U4TXIP<2:0>			U4TXIS<1:0>		0000
0400	IPC44	31:16	—	—	—	U5EIP<2:0>			U5EIS<1:0>		—	—	—	SPI5TXIP<2:0>(2)			SPI5TXIS<1:0>(2)		0000
		15:0	—	—	—	SPI5RXIP<2:0>(2)			SPI5RXIS<1:0>(2)		—	—	—	SPI5EIP<2:0>(2)			SPI5EIS<1:0>(2)		0000
0410	IPC45	31:16	—	—	—	I2C5SIP<2:0>			I2C5SIS<1:0>		—	—	—	I2C5BIP<2:0>			I2C5BIS<1:0>		0000
		15:0	—	—	—	U5TXIP<2:0>			U5TXIS<1:0>		—	—	—	U5RXIP<2:0>			U5RXIS<1:0>		0000
0420	IPC46	31:16	—	—	—	SPI6TXIP<2:0>(2)			SPI6TXIS<1:0>(2)		—	—	—	SPI6RXIP<2:0>(2)			SPI6RXIS<1:0>(2)		0000
		15:0	—	—	—	SPI6EIP<2:0>(2)			SPI6EIS<1:0>(2)		—	—	—	I2C5MIP<2:0>			I2C5MIS<1:0>		0000
0430	IPC47	31:16	—	—	—	—	—	—	—	—	—	—	—	U6TXIP<2:0>			U6TXIS<1:0>		0000
		15:0	—	—	—	U6RXIP<2:0>			U6RXIS<1:0>		—	—	—	U6EIP<2:0>			U6EIS<1:0>		0000
0440	IPC48	31:16	—	—	—	—	—	—	—	—	—	—	—	ADCURDYIP<2:0>			ADCURDYIS<1:0>		0000
		15:0	—	—	—	ADCARDYIP<2:0>			ADCARDYIS<1:0>		—	—	—	ADCEOSIP<2:0>			ADCEOSIS<1:0>		0000
0450	IPC49	31:16	—	—	—	ADC1EIP<2:0>			ADC1EIS<1:0>					ADC0EIP<2:0>			ADC0EIS<1:0>		0000
		15:0	—	—	—	—	—	—	—	—				ADCGRPIP<2:0>			ADCGRPIS<1:0>		0000
0460	IPC50	31:16	—	—	—	—	—	—	—	—				ADC4EIP<2:0>			ADC4EIS<1:0>		0000
		15:0	—	—	—	ADC3EIP<2:0>			ADC3EIS<1:0>					ADC2EIP<2:0>			ADC2EIS<1:0>		0000
0470	IPC51	31:16	—	—	—	ADC1WIP<2:0>			ADC1WIS<1:0>					ADC0WIP<2:0>			ADC0WIS<1:0>		0000
		15:0	—	—	—	ADC7EIP<2:0>			ADC7EIS<1:0>					—	—	—	—	—	0000
0480	IPC52	31:16	—	—	—	—	—	—	—	—				ADC4WIP<2:0>			ADC4WIS<1:0>		0000
		15:0	—	—	—	ADC3WIP<2:0>			ADC3WIS<1:0>					ADC2WIP<2:0>			ADC2WIS<1:0>		0000
0490	IPC53	31:16	—	—	—	—	—	—	—	—				—	—	—	—	—	0000
		15:0	—	—	—	ADC7WIP<2:0>			ADC7WIS<1:0>					—	—	—	—	—	0000
0540	OFF000	31:16	—	—	—	—	—	—	—	—	—	—	—	—	—	—	VOFF<17:16>		0000
		15:0	VOFF<15:1>															—	0000
0544	OFF001	31:16	—	—	—	—	—	—	—	—	—	—	—	—	—	—	VOFF<17:16>		0000
		15:0	VOFF<15:1>															—	0000

Legend: x = unknown value on Reset; — = unimplemented, read as '0'. Reset values are shown in hexadecimal.

Note 1: All registers in this table with the exception of the OFFx registers, have corresponding CLR, SET, and INV registers at their virtual addresses, plus offsets of 0x4, 0x8 and 0xC, respectively. See **Section 12.3 "CLR, SET, and INV Registers"** for more information.

2: This bit or register is not available on 64-pin devices.

3: This bit or register is not available on devices without a CAN module.

4: This bit or register is not available on 100-pin devices.

5: Bits 31 and 30 are not available on 64-pin and 100-pin devices; bits 29 through 14 are not available on 64-pin devices.

6: Bits 31, 30, 29, and bits 5 through 0 are not available on 64-pin and 100-pin devices; bit 31 is not available on 124-pin devices; bit 22 is not available on 64-pin devices.

7: This bit or register is not available on devices without a Crypto module.

8: This bit or register is not available on 124-pin devices.

© 2015-2016 Microchip Technology Inc.

TABLE 10-3: DMA CHANNEL 0 THROUGH CHANNEL 7 REGISTER MAP (CONTINUED)

Virtual Address (BF81_#)	Register Name(1)	Bit Range	Bits 31/15	30/14	29/13	28/12	27/11	26/10	25/9	24/8	23/7	22/6	21/5	20/4	19/3	18/2	17/1	16/0	All Resets
1170	DCH1SSIZ	31:16	—	—	—	—	—	—	—	—	—	—	—	—	—	—	—	—	0000
		15:0	CHSSIZ<15:0>																0000
1180	DCH1DSIZ	31:16	—	—	—	—	—	—	—	—	—	—	—	—	—	—	—	—	0000
		15:0	CHDSIZ<15:0>																0000
1190	DCH1SPTR	31:16	—	—	—	—	—	—	—	—	—	—	—	—	—	—	—	—	0000
		15:0	CHSPTR<15:0>																0000
11A0	DCH1DPTR	31:16	—	—	—	—	—	—	—	—	—	—	—	—	—	—	—	—	0000
		15:0	CHDPTR<15:0>																0000
11B0	DCH1CSIZ	31:16	—	—	—	—	—	—	—	—	—	—	—	—	—	—	—	—	0000
		15:0	CHCSIZ<15:0>																0000
11C0	DCH1CPTR	31:16	—	—	—	—	—	—	—	—	—	—	—	—	—	—	—	—	0000
		15:0	CHCPTR<15:0>																0000
11D0	DCH1DAT	31:16	—	—	—	—	—	—	—	—	—	—	—	—	—	—	—	—	0000
		15:0	CHPDAT<15:0>																0000
11E0	DCH2CON	31:16	CHPIGN<7:0>								—	—	—	—	—	—	—	—	0000
		15:0	CHBUSY	—	CHPIGNEN	—	CHPATLEN	—	—	CHCHNS	CHEN	CHAED	CHCHN	CHAEN	—	CHEDET	CHPRI<1:0>		0000
11F0	DCH2ECON	31:16	—	—	—	—	—	—	—	—	CHAIRQ<7:0>								00FF
		15:0	CHSIRQ<7:0>								CFORCE	CABORT	PATEN	SIRQEN	AIRQEN	—	—	—	FF00
1200	DCH2INT	31:16	—	—	—	—	—	—	—	—	CHSDIE	CHSHIE	CHDDIE	CHDHIE	CHBCIE	CHCCIE	CHTAIE	CHERIE	0000
		15:0	—	—	—	—	—	—	—	—	CHSDIF	CHSHIF	CHDDIF	CHDHIF	CHBCIF	CHCCIF	CHTAIF	CHERIF	0000
1210	DCH2SSA	31:16	CHSSA<31:0>																0000
		15:0																	0000
1220	DCH2DSA	31:16	CHDSA<31:0>																0000
		15:0																	0000
1230	DCH2SSIZ	31:16	—	—	—	—	—	—	—	—	—	—	—	—	—	—	—	—	0000
		15:0	CHSSIZ<15:0>																0000
1240	DCH2DSIZ	31:16	—	—	—	—	—	—	—	—	—	—	—	—	—	—	—	—	0000
		15:0	CHDSIZ<15:0>																0000
1250	DCH2SPTR	31:16	—	—	—	—	—	—	—	—	—	—	—	—	—	—	—	—	0000
		15:0	CHSPTR<15:0>																0000
1260	DCH2DPTR	31:16	—	—	—	—	—	—	—	—	—	—	—	—	—	—	—	—	0000
		15:0	CHDPTR<15:0>																0000
1270	DCH2CSIZ	31:16	—	—	—	—	—	—	—	—	—	—	—	—	—	—	—	—	0000
		15:0	CHCSIZ<15:0>																0000

Legend: x = unknown value on Reset; — = unimplemented, read as '0'. Reset values are shown in hexadecimal.

Note 1: All registers in this table have corresponding CLR, SET and INV registers at their virtual addresses, plus offsets of 0x4, 0x8 and 0xC, respectively. See **Section 12.3 "CLR, SET, and INV Registers"** for more information.

© 2015-2016 Microchip Technology Inc.

REGISTER 10-14: DCHxSPTR: DMA CHANNEL x SOURCE POINTER REGISTER

Bit Range	Bit 31/23/15/7	Bit 30/22/14/6	Bit 29/21/13/5	Bit 28/20/12/4	Bit 27/19/11/3	Bit 26/18/10/2	Bit 25/17/9/1	Bit 24/16/8/0
31:24	U-0	U-0	U-0	U-0	U-0	U-0	U-0	U-0
	—	—	—	—	—	—	—	—
23:16	U-0	U-0	U-0	U-0	U-0	U-0	U-0	U-0
	—	—	—	—	—	—	—	—
15:8	R-0	R-0	R-0	R-0	R-0	R-0	R-0	R-0
	CHSPTR<15:8>							
7:0	R-0	R-0	R-0	R-0	R-0	R-0	R-0	R-0
	CHSPTR<7:0>							

Legend:			
R = Readable bit	W = Writable bit	U = Unimplemented bit, read as ‘0’	
-n = Value at POR	‘1’ = Bit is set	‘0’ = Bit is cleared	x = Bit is unknown

bit 31-16 **Unimplemented:** Read as ‘0’

bit 15-0 **CHSPTR<15:0>:** Channel Source Pointer bits

1111111111111111 = Points to byte 65,535 of the source

•

•

•

0000000000000001 = Points to byte 1 of the source

0000000000000000 = Points to byte 0 of the source

Note: When in Pattern Detect mode, this register is reset on a pattern detect.

REGISTER 10-15: DCHxDPTR: DMA CHANNEL x DESTINATION POINTER REGISTER

Bit Range	Bit 31/23/15/7	Bit 30/22/14/6	Bit 29/21/13/5	Bit 28/20/12/4	Bit 27/19/11/3	Bit 26/18/10/2	Bit 25/17/9/1	Bit 24/16/8/0
31:24	U-0	U-0	U-0	U-0	U-0	U-0	U-0	U-0
	—	—	—	—	—	—	—	—
23:16	U-0	U-0	U-0	U-0	U-0	U-0	U-0	U-0
	—	—	—	—	—	—	—	—
15:8	R-0	R-0	R-0	R-0	R-0	R-0	R-0	R-0
	CHDPTR<15:8>							
7:0	R-0	R-0	R-0	R-0	R-0	R-0	R-0	R-0
	CHDPTR<7:0>							

Legend:			
R = Readable bit	W = Writable bit	U = Unimplemented bit, read as ‘0’	
-n = Value at POR	‘1’ = Bit is set	‘0’ = Bit is cleared	x = Bit is unknown

bit 31-16 **Unimplemented:** Read as ‘0’

bit 15-0 **CHDPTR<15:0>:** Channel Destination Pointer bits

1111111111111111 = Points to byte 65,535 of the destination

•

•

•

0000000000000001 = Points to byte 1 of the destination

0000000000000000 = Points to byte 0 of the destination

TABLE 21-1: I2C1 THROUGH I2C5 REGISTER MAP (CONTINUED)

Virtual Address (BF82_#)	Register Name(1)	Bit Range	Bits 31/15	30/14	29/13	28/12	27/11	26/10	25/9	24/8	23/7	22/6	21/5	20/4	19/3	18/2	17/1	16/0	All Resets
0430	I2C3MSK	31:16	—	—	—	—	—	—	—	—	—	—	—	—	—	—	—	—	0000
		15:0	—	—	—	—	—	—	Address Mask Register										0000
0440	I2C3BRG	31:16	—	—	—	—	—	—	—	—	—	—	—	—	—	—	—	—	0000
		15:0	Baud Rate Generator Register																0000
0450	I2C3TRN	31:16	—	—	—	—	—	—	—	—	—	—	—	—	—	—	—	—	0000
		15:0	—	—	—	—	—	—	—	—	Transmit Register								0000
0460	I2C3RCV	31:16	—	—	—	—	—	—	—	—	—	—	—	—	—	—	—	—	0000
		15:0	—	—	—	—	—	—	—	—	Receive Register								0000
0600	I2C4CON	31:16	—	—	—	—	—	—	—	—	—	PCIE	SCIE	BOEN	SDAHT	SBCDE	AHEN	DHEN	0000
		15:0	ON	—	SIDL	SCLREL	STRICT	A10M	DISSLW	SMEN	GCEN	STREN	ACKDT	ACKEN	RCEN	PEN	RSEN	SEN	1000
0610	I2C4STAT	31:16	—	—	—	—	—	—	—	—	—	—	—	—	—	—	—	—	0000
		15:0	ACKSTAT	TRSTAT	ACKTIM	—	—	BCL	GCSTAT	ADD10	IWCOL	I2COV	D/A	P	S	R/W	RBF	TBF	0000
0620	I2C4ADD	31:16	—	—	—	—	—	—	—	—	—	—	—	—	—	—	—	—	0000
		15:0	—	—	—	—	—	—	Address Register										0000
0630	I2C4MSK	31:16	—	—	—	—	—	—	—	—	—	—	—	—	—	—	—	—	0000
		15:0	—	—	—	—	—	—	Address Mask Register										0000
0640	I2C4BRG	31:16	—	—	—	—	—	—	—	—	—	—	—	—	—	—	—	—	0000
		15:0	Baud Rate Generator Register																0000
0650	I2C4TRN	31:16	—	—	—	—	—	—	—	—	—	—	—	—	—	—	—	—	0000
		15:0	—	—	—	—	—	—	—	—	Transmit Register								0000
0660	I2C4RCV	31:16	—	—	—	—	—	—	—	—	—	—	—	—	—	—	—	—	0000
		15:0	—	—	—	—	—	—	—	—	Receive Register								0000
0800	I2C5CON	31:16	—	—	—	—	—	—	—	—	—	PCIE	SCIE	BOEN	SDAHT	SBCDE	AHEN	DHEN	0000
		15:0	ON	—	SIDL	SCLREL	STRICT	A10M	DISSLW	SMEN	GCEN	STREN	ACKDT	ACKEN	RCEN	PEN	RSEN	SEN	1000
0810	I2C5STAT	31:16	—	—	—	—	—	—	—	—	—	—	—	—	—	—	—	—	0000
		15:0	ACKSTAT	TRSTAT	ACKTIM	—	—	BCL	GCSTAT	ADD10	IWCOL	I2COV	D/A	P	S	R/W	RBF	TBF	0000
0820	I2C5ADD	31:16	—	—	—	—	—	—	—	—	—	—	—	—	—	—	—	—	0000
		15:0	—	—	—	—	—	—	Address Register										0000
0830	I2C5MSK	31:16	—	—	—	—	—	—	—	—	—	—	—	—	—	—	—	—	0000
		15:0	—	—	—	—	—	—	Address Mask Register										0000
0840	I2C5BRG	31:16	—	—	—	—	—	—	—	—	—	—	—	—	—	—	—	—	0000
		15:0	Baud Rate Generator Register																0000
0850	I2C5TRN	31:16	—	—	—	—	—	—	—	—	—	—	—	—	—	—	—	—	0000
		15:0	—	—	—	—	—	—	—	—	Transmit Register								0000
0860	I2C5RCV	31:16	—	—	—	—	—	—	—	—	—	—	—	—	—	—	—	—	0000
		15:0	—	—	—	—	—	—	—	—	Receive Register								0000

Legend: x = unknown value on Reset; — = unimplemented, read as ‘0’. Reset values are shown in hexadecimal.

Note 1: All registers in this table except I2CxRCV have corresponding CLR, SET and INV registers at their virtual addresses, plus offsets of 0x4, 0x8 and 0xC, respectively. See **Section 12.3 “CLR, SET, and INV Registers”** for more information.

2: This register is not available on 64-pin devices.

© 2015-2016 Microchip Technology Inc.

REGISTER 21-1: I2CxCON: I^{2}C CONTROL REGISTER (CONTINUED)

bit 12 **SCLREL:** SCLx Release Control bit (when operating as I^{2}C slave)
1 = Release SCLx clock
0 = Hold SCLx clock low (clock stretch)

If STREN = 1:
Bit is R/W (i.e., software can write '0' to initiate stretch and write '1' to release clock). Hardware clear at beginning of slave transmission. Hardware clear at end of slave reception.

If STREN = 0:
Bit is R/S (i.e., software can only write '1' to release clock). Hardware clear at beginning of slave transmission.

bit 11 **STRICT:** Strict I^{2}C Reserved Address Rule Enable bit
1 = Strict reserved addressing is enforced. Device does not respond to reserved address space or generate addresses in reserved address space.
0 = Strict I^{2}C Reserved Address Rule is not enabled

bit 10 **A10M:** 10-bit Slave Address bit
1 = I2CxADD is a 10-bit slave address
0 = I2CxADD is a 7-bit slave address

bit 9 **DISSLW:** Disable Slew Rate Control bit
1 = Slew rate control is disabled
0 = Slew rate control is enabled

bit 8 **SMEN:** SMBus Input Levels bit
1 = Enable I/O pin thresholds compliant with SMBus specification
0 = Disable SMBus input thresholds

bit 7 **GCEN:** General Call Enable bit (when operating as I^{2}C slave)
1 = Enable interrupt when a general call address is received in the I2CxRSR (module is enabled for reception)
0 = General call address is disabled

bit 6 **STREN:** SCLx Clock Stretch Enable bit (when operating as I^{2}C slave)
Used in conjunction with SCLREL bit.
1 = Enable software or receive clock stretching
0 = Disable software or receive clock stretching

bit 5 **ACKDT:** Acknowledge Data bit (when operating as I^{2}C master, applicable during master receive)
Value that is transmitted when the software initiates an Acknowledge sequence.
1 = Send NACK during Acknowledge
0 = Send ACK during Acknowledge

bit 4 **ACKEN:** Acknowledge Sequence Enable bit
(when operating as I^{2}C master, applicable during master receive)
1 = Initiate Acknowledge sequence on SDAx and SCLx pins and transmit ACKDT data bit. Hardware clear at end of master Acknowledge sequence.
0 = Acknowledge sequence not in progress

bit 3 **RCEN:** Receive Enable bit (when operating as I^{2}C master)
1 = Enables Receive mode for I^{2}C. Hardware clear at end of eighth bit of master receive data byte.
0 = Receive sequence not in progress

bit 2 **PEN:** Stop Condition Enable bit (when operating as I^{2}C master)
1 = Initiate Stop condition on SDAx and SCLx pins. Hardware clear at end of master Stop sequence.
0 = Stop condition not in progress

bit 1 **RSEN:** Repeated Start Condition Enable bit (when operating as I^{2}C master)
1 = Initiate Repeated Start condition on SDAx and SCLx pins. Hardware clear at end of master Repeated Start sequence.
0 = Repeated Start condition not in progress

bit 0 **SEN:** Start Condition Enable bit (when operating as I^{2}C master)
1 = Initiate Start condition on SDAx and SCLx pins. Hardware clear at end of master Start sequence.
0 = Start condition not in progress

© 2015-2016 Microchip Technology Inc.

23.1 PMP Control Registers

TABLE 23-1: PARALLEL MASTER PORT REGISTER MAP

Virtual Address (BF82_#)	Register Name(1)	Bit Range	Bits																All Resets
			31/15	30/14	29/13	28/12	27/11	26/10	25/9	24/8	23/7	22/6	21/5	20/4	19/3	18/2	17/1	16/0	
E000	PMCON	31:16	—	—	—	—	—	—	—	—	RDSTART	—	—	—	—	—	DUALBUF	—	0000
		15:0	ON	—	SIDL	ADRMUX<1:0>		PMPTTL	PTWREN	PTRDEN	CSF<1:0>		ALP	CS2P	CS1P	—	WRSP	RDSP	0000
E010	PMMODE	31:16	—	—	—	—	—	—	—	—	—	—	—	—	—	—	—	—	0000
		15:0	BUSY	IRQM<1:0>		INCM<1:0>		MODE16	MODE<1:0>		WAITB<1:0>		WAITM<3:0>				WAITE<1:0>		0000
E020	PMADDR	31:16	—	—	—	—	—	—	—	—	—	—	—	—	—	—	—	—	0000
		15:0	CS2	CS1	ADDR<13:0>														0000
			ADDR15	ADDR14															0000
E030	PMDOUT	31:16	—	—	—	—	—	—	—	—	—	—	—	—	—	—	—	—	0000
		15:0	DATAOUT<15:0>																0000
E040	PMDIN	31:16	—	—	—	—	—	—	—	—	—	—	—	—	—	—	—	—	0000
		15:0	DATAIN<15:0>																0000
E050	PMAEN	31:16	—	—	—	—	—	—	—	—	—	—	—	—	—	—	—	—	0000
		15:0	PTEN<15:0>																0000
E060	PMSTAT	31:16	—	—	—	—	—	—	—	—	—	—	—	—	—	—	—	—	0000
		15:0	IBF	IBOV	—	—	IB3F	IB2F	IB1F	IB0F	OBE	OBUF	—	—	OB3E	OB2E	OB1E	OB0E	008F
E070	PMWADDR	31:16	—	—	—	—	—	—	—	—	—	—	—	—	—	—	—	—	0000
		15:0	WCS2	WCS1	—	—	—	—	—	—	—	—	—	—	—	—	—	—	0000
			WADDR15	WADDR14	WADDR<13:0>														0000
E080	PMRADDR	31:16	—	—	—	—	—	—	—	—	—	—	—	—	—	—	—	—	0000
		15:0	RCS2	RCS1	—	—	—	—	—	—	—	—	—	—	—	—	—	—	0000
			RADDR15	RADDR14	RADDR<13:0>														0000
E090	PMRDIN	31:16	31:16	—	—	—	—	—	—	—	—	—	—	—	—	—	—	—	0000
		15:0	15:0	RDATAIN<15:0>															0000

Legend: x = unknown value on Reset; — = unimplemented, read as ‘0’. Reset values are shown in hexadecimal.

Note 1: All registers in this table have corresponding CLR, SET and INV registers at their virtual addresses, plus offsets of 0x4, 0x8 and 0xC, respectively. See **Section 12.3 “CLR, SET, and INV Registers”** for more information.

© 2015-2016 Microchip Technology Inc.

REGISTER 26-5: CESTAT: CRYPTO ENGINE STATUS REGISTER

Bit Range	Bit 31/23/15/7	Bit 30/22/14/6	Bit 29/21/13/5	Bit 28/20/12/4	Bit 27/19/11/3	Bit 26/18/10/2	Bit 25/17/9/1	Bit 24/16/8/0
31:24	R-0	R-0	R-0	R-0	R-0	R-0	R-0	R-0
	ERRMODE<2:0>			ERROP<2:0>			ERRPHASE<1:0>	
23:16	U-0	U-0	R-0	R-0	R-0	R-0	R-0	R-0
	—	—	BDSTATE<3:0>				START	ACTIVE
15:8	R-0	R-0	R-0	R-0	R-0	R-0	R-0	R-0
	BDCTRL<15:8>							
7:0	R-0	R-0	R-0	R-0	R-0	R-0	R-0	R-0
	BDCTRL<7:0>							

Legend:			
R = Readable bit	W = Writable bit	U = Unimplemented bit, read as ‘0’	
-n = Value at POR	‘1’ = Bit is set	‘0’ = Bit is cleared	x = Bit is unknown

bit 31-29 **ERRMODE<2:0>:** Internal Error Mode Status bits
- 111 = Reserved
- 110 = Reserved
- 101 = Reserved
- 100 = Reserved
- 011 = CEK operation
- 010 = KEK operation
- 001 = Preboot authentication
- 000 = Normal operation

bit 28-26 **ERROP<2:0>:** Internal Error Operation Status bits
- 111 = Reserved
- 110 = Reserved
- 101 = Reserved
- 100 = Authentication
- 011 = Reserved
- 010 = Decryption
- 001 = Encryption
- 000 = Reserved

bit 25-24 **ERRPHASE<1:0>:** Internal Error Phase of DMA Status bits
- 11 = Destination data
- 10 = Source data
- 01 = Security Association (SA) access
- 00 = Buffer Descriptor (BD) access

bit 23-22 **Unimplemented:** Read as ‘0’

bit 21-18 **BDSTATE<3:0>:** Buffer Descriptor Processor State Status bits

The current state of the BDP:
- 1111 = Reserved
- •
- •
- •
- 0111 = Reserved
- 0110 = SA fetch
- 0101 = Fetch BDP is disabled
- 0100 = Descriptor is done
- 0011 = Data phase
- 0010 = BDP is loading
- 0001 = Descriptor fetch request is pending
- 0000 = BDP is idle

bit 17 **START:** DMA Start Status bit
- 1 = DMA start has occurred
- 0 = DMA start has not occurred

© 2015-2016 Microchip Technology Inc.

Figure 26-10: Format of SA_CTRL (Continued)

bit 16-10 **ALGO<6:0>:** Type of Algorithm to Use
1xxxxxx = HMAC 1
x1xxxxx = SHA-256
xx1xxxx = SHA1
xxx1xxx = MD5
xxxx1xx = AES
xxxxx1x = TDES
xxxxxx1 = DES

bit 9 **ENC:** Type of Encryption Setting
1 = Encryption
0 = Decryption

bit 8-7 **KEYSIZE<1:0>:** Size of Keys in SA_AUTHKEYx or SA_ENCKEYx
11 = Reserved; do not use
10 = 256 bits
01 = 192 bits
00 = 128 bits(1)

bit 6-4 **MULTITASK<2:0>:** How to Combine Parallel Operations in the Crypto Engine
111 = Parallel pass (decrypt and authenticate incoming data in parallel)
101 = Pipe pass (encrypt the incoming data, and then perform authentication on the encrypted data)
011 = Reserved
010 = Reserved
001 = Reserved
000 = Encryption or authentication or decryption (no pass)

bit 3-0 **CRYPTOALGO<3:0>:** Mode of operation for the Crypto Algorithm
1111 = Reserved
1110 = AES_GCM (for AES processing)
1101 = RCTR (for AES processing)
1100 = RCBC_MAC (for AES processing)
1011 = ROFB (for AES processing)
1010 = RCFB (for AES processing)
1001 = RCBC (for AES processing)
1000 = RECB (for AES processing)
0111 = TOFB (for Triple-DES processing)
0110 = TCFB (for Triple-DES processing)
0101 = TCBC (for Triple-DES processing)
0100 = TECB (for Triple-DES processing)
0011 = OFB (for DES processing)
0010 = CFB (for DES processing)
0001 = CBC (for DES processing)
0000 = ECB (for DES processing)

Note 1: This setting does not alter the size of SA_AUTHKEYx or SA_ENCKEYx in the Security Association, only the number of bits of SA_AUTHKEYx and SA_ENCKEYx that are used.

© 2015-2016 Microchip Technology Inc.

FIGURE 28-3: FIFO BLOCK DIAGRAM

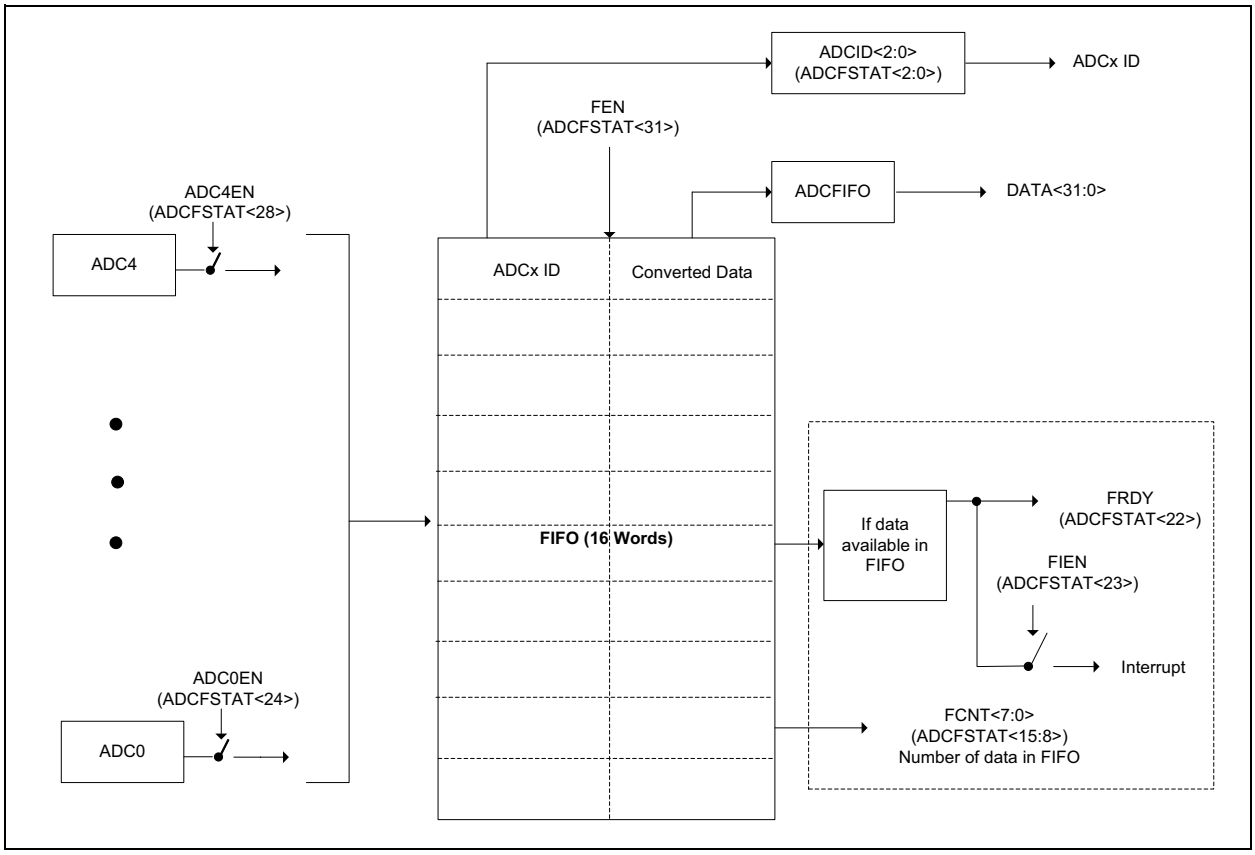

© 2015-2016 Microchip Technology Inc.

REGISTER 28-5: ADCIMCON1: ADC INPUT MODE CONTROL REGISTER 1 (CONTINUED)

bit 20 **SIGN10:** AN10 Signed Data Mode bit
1 = AN10 is using Signed Data mode
0 = AN10 is using Unsigned Data mode

bit 19 **DIFF9:** AN9 Mode bit
1 = AN9 is using Differential mode
0 = AN9 is using Single-ended mode

bit 18 **SIGN9:** AN9 Signed Data Mode bit
1 = AN9 is using Signed Data mode
0 = AN9 is using Unsigned Data mode

bit 17 **DIFF8:** AN 8 Mode bit
1 = AN8 is using Differential mode
0 = AN8 is using Single-ended mode

bit 16 **SIGN8:** AN8 Signed Data Mode bit
1 = AN8 is using Signed Data mode
0 = AN8 is using Unsigned Data mode

bit 15 **DIFF7:** AN7 Mode bit
1 = AN7 is using Differential mode
0 = AN7 is using Single-ended mode

bit 14 **SIGN7:** AN7 Signed Data Mode bit
1 = AN7 is using Signed Data mode
0 = AN7 is using Unsigned Data mode

bit 13 **DIFF6:** AN6 Mode bit
1 = AN6 is using Differential mode
0 = AN6 is using Single-ended mode

bit 12 **SIGN6:** AN6 Signed Data Mode bit
1 = AN6 is using Signed Data mode
0 = AN6 is using Unsigned Data mode

bit 11 **DIFF5:** AN5 Mode bit
1 = AN5 is using Differential mode
0 = AN5 is using Single-ended mode

bit 10 **SIGN5:** AN5 Signed Data Mode bit
1 = AN5 is using Signed Data mode
0 = AN5 is using Unsigned Data mode

bit 9 **DIFF4:** AN4 Mode bit
1 = AN4 is using Differential mode
0 = AN4 is using Single-ended mode

bit 8 **SIGN4:** AN4 Signed Data Mode bit
1 = AN4 is using Signed Data mode
0 = AN4 is using Unsigned Data mode

bit 7 **DIFF3:** AN3 Mode bit
1 = AN3 is using Differential mode
0 = AN3 is using Single-ended mode

bit 6 **SIGN3:** AN3 Signed Data Mode bit
1 = AN3 is using Signed Data mode
0 = AN3 is using Unsigned Data mode

bit 5 **DIFF2:** AN2 Mode bit
1 = AN2 is using Differential mode
0 = AN2 is using Single-ended mode

© 2015-2016 Microchip Technology Inc.

REGISTER 28-5: ADCIMCON1: ADC INPUT MODE CONTROL REGISTER 1 (CONTINUED)

bit 4 **SIGN2:** AN2 Signed Data Mode bit
1 = AN2 is using Signed Data mode
0 = AN2 is using Unsigned Data mode

bit 3 **DIFF1:** AN1 Mode bit
1 = AN1 is using Differential mode
0 = AN1 is using Single-ended mode

bit 2 **SIGN1:** AN1 Signed Data Mode bit
1 = AN1 is using Signed Data mode
0 = AN1 is using Unsigned Data mode

bit 1 **DIFF0:** AN0 Mode bit
1 = AN0 is using Differential mode
0 = AN0 is using Single-ended mode

bit 0 **SIGN0:** AN0 Signed Data Mode bit
1 = AN0 is using Signed Data mode
0 = AN0 is using Unsigned Data mode

REGISTER 28-7: ADCIMCON3: ADC INPUT MODE CONTROL REGISTER 3 (CONTINUED)

bit 16 **SIGN40:** AN40 Signed Data Mode bit(2)
1 = AN40 is using Signed Data mode
0 = AN40 is using Unsigned Data mode

bit 15 **DIFF39:** AN39 Mode bit(2)
1 = AN39 is using Differential mode
0 = AN39 is using Single-ended mode

bit 14 **SIGN39:** AN39 Signed Data Mode bit(2)
1 = AN39 is using Signed Data mode
0 = AN39 is using Unsigned Data mode

bit 13 **DIFF38:** AN38 Mode bit(2)
1 = AN38 is using Differential mode
0 = AN38 is using Single-ended mode

bit 12 **SIGN38:** AN38 Signed Data Mode bit(2)
1 = AN38 is using Signed Data mode
0 = AN38 is using Unsigned Data mode

bit 11 **DIFF37:** AN37 Mode bit(2)
1 = AN37 is using Differential mode
0 = AN37 is using Single-ended mode

bit 10 **SIGN37:** AN37 Signed Data Mode bit(2)
1 = AN37 is using Signed Data mode
0 = AN37 is using Unsigned Data mode

bit 9 **DIFF36:** AN36 Mode bit(2)
1 = AN36 is using Differential mode
0 = AN36 is using Single-ended mode

bit 8 **SIGN36:** AN36 Signed Data Mode bit(2)
1 = AN36 is using Signed Data mode
0 = AN36 is using Unsigned Data mode

bit 7 **DIFF35:** AN35 Mode bit(2)
1 = AN35 is using Differential mode
0 = AN35 is using Single-ended mode

bit 6 **SIGN35:** AN35 Signed Data Mode bit(2)
1 = AN35 is using Signed Data mode
0 = AN35 is using Unsigned Data mode

bit 5 **DIFF34:** AN34 Mode bit(1)
1 = AN34 is using Differential mode
0 = AN34 is using Single-ended mode

bit 4 **SIGN34:** AN34 Signed Data Mode bit(1)
1 = AN34 is using Signed Data mode
0 = AN34 is using Unsigned Data mode

bit 3 **DIFF33:** AN33 Mode bit(1)
1 = AN33 is using Differential mode
0 = AN33 is using Single-ended mode

bit 2 **SIGN33:** AN33 Signed Data Mode bit(1)
1 = AN33 is using Signed Data mode
0 = AN33 is using Unsigned Data mode

Note 1: This bit is not available on 64-pin devices.
2: This bit is not available on 64-pin and 100-pin devices.

© 2015-2016 Microchip Technology Inc.

REGISTER 28-18: ADCTRG2: ADC TRIGGER SOURCE 2 REGISTER

Bit Range	Bit 31/23/15/7	Bit 30/22/14/6	Bit 29/21/13/5	Bit 28/20/12/4	Bit 27/19/11/3	Bit 26/18/10/2	Bit 25/17/9/1	Bit 24/16/8/0
31:24	U-0	U-0	U-0	R/W-0	R/W-0	R/W-0	R/W-0	R/W-0
	—	—	—	TRGSRC7<4:0>				
23:16	U-0	U-0	U-0	R/W-0	R/W-0	R/W-0	R/W-0	R/W-0
	—	—	—	TRGSRC6<4:0>				
15:8	U-0	U-0	U-0	R/W-0	R/W-0	R/W-0	R/W-0	R/W-0
	—	—	—	TRGSRC5<4:0>				
7:0	U-0	U-0	U-0	R/W-0	R/W-0	R/W-0	R/W-0	R/W-0
	—	—	—	TRGSRC4<4:0>				

Legend:			
R = Readable bit	W = Writable bit	U = Unimplemented bit, read as ‘0’	
-n = Value at POR	‘1’ = Bit is set	‘0’ = Bit is cleared	x = Bit is unknown

bit 31-29 **Unimplemented:** Read as ‘0’

bit 28-24 **TRGSRC7<4:0>:** Trigger Source for Conversion of Analog Input AN7 Select bits
11111 = Reserved
•
•
•
01101 = Reserved
01100 = Comparator 2 (COUT)
01011 = Comparator 1 (COUT)
01010 = OCMP5
01001 = OCMP3
01000 = OCMP1
00111 = TMR5 match
00110 = TMR3 match
00101 = TMR1 match
00100 = INT0 External interrupt
00011 = STRIG
00010 = Global level software trigger (GLSWTRG)
00001 = Global software edge Trigger (GSWTRG)
00000 = No Trigger

For STRIG, in addition to setting the trigger, it also requires programming of the STRGSRC<4:0> bits (ADCCON1<20:16>) to select the trigger source, and requires the appropriate CSS bits to be set in the ADCCSS*x* registers.

bit 23-21 **Unimplemented:** Read as ‘0’

bit 20-16 **TRGSRC6<4:0>:** Trigger Source for Conversion of Analog Input AN6 Select bits
See bits 28-24 for bit value definitions.

bit 15-13 **Unimplemented:** Read as ‘0’

bit 12-8 **TRGSRC5<4:0>:** Trigger Source for Conversion of Analog Input AN5 Select bits
See bits 28-24 for bit value definitions.

bit 7-5 **Unimplemented:** Read as ‘0’

bit 4-0 **TRGSRC4<4:0>:** Trigger Source for Conversion of Analog Input AN4 Select bits
See bits 28-24 for bit value definitions.

FIGURE 37-11: SPIx MODULE MASTER MODE (CKE = 1) TIMING CHARACTERISTICS

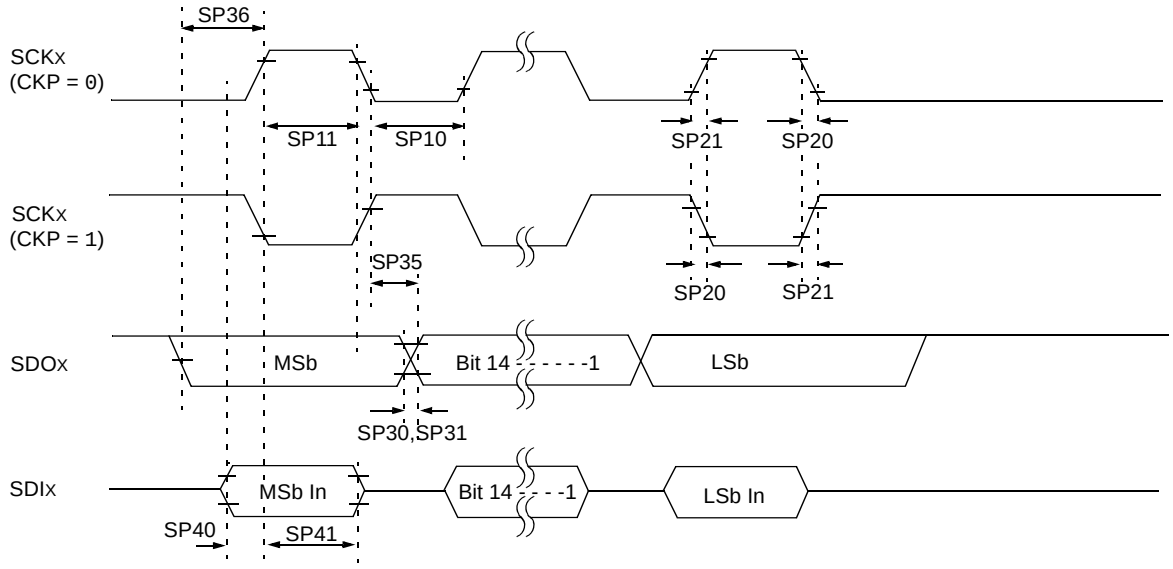

Note: Refer to Figure 37-1 for load conditions.

© 2015-2016 Microchip Technology Inc.

TABLE 37-31: SPIx MODULE MASTER MODE (CKE = 1) TIMING REQUIREMENTS

AC CHARACTERISTICS			Standard Operating Conditions: 2.1V to 3.6V (unless otherwise stated) Operating temperature -40°C ≤ TA ≤ +85°C for Industrial -40°C ≤ TA ≤ +125°C for Extended				
Param. No.	**Symbol**	**Characteristics(1)**	**Min.**	**Typ.(2)**	**Max.**	**Units**	**Conditions**
SP10	TscL	SCKx Output Low Time **(Note 3)**	Tsck/2	—	—	ns	—
SP11	TscH	SCKx Output High Time **(Note 3)**	Tsck/2	—	—	ns	—
SP15	TscK	SPI Clock Speed **(Note 5)**	— — — — —	— — — — —	25 50 25 50 25	MHz MHz MHz MHz MHz	SPI1, SPI4 through SPI6 SPI2 on RPB3, RPB5 SPI2 on other I/O SPI3 on RPB10, RPB9, RPF0 SPI3 on other I/O
SP20	TscF	SCKx Output Fall Time **(Note 4)**	—	—	—	ns	See parameter DO32
SP21	TscR	SCKx Output Rise Time **(Note 4)**	—	—	—	ns	See parameter DO31
SP30	TdoF	SDOx Data Output Fall Time **(Note 4)**	—	—	—	ns	See parameter DO32
SP31	TdoR	SDOx Data Output Rise Time **(Note 4)**	—	—	—	ns	See parameter DO31
SP35	TscH2doV, TscL2doV	SDOx Data Output Valid after SCKx Edge	—	—	7	ns	VDD > 2.7V
			—	—	10	ns	VDD < 2.7V
SP36	TdoV2sc, TdoV2scL	SDOx Data Output Setup to First SCKx Edge	—	—	7	ns	—
SP40	TdiV2scH, TdiV2scL	Setup Time of SDIx Data Input to SCKx Edge	7	—	—	ns	VDD > 2.7V
			10	—	—	ns	VDD < 2.7V
SP41	TscH2diL, TscL2diL	Hold Time of SDIx Data Input to SCKx Edge	7	—	—	ns	VDD > 2.7V
			10	—	—	ns	VDD < 2.7V

Note 1: These parameters are characterized, but not tested in manufacturing.

2: Data in “Typical” column is at 3.3V, +25°C unless otherwise stated. Parameters are for design guidance only and are not tested.

3: The minimum clock period for SCKx is 20 ns. Therefore, the clock generated in Master mode must not violate this specification.

4: Assumes 30 pF load on all SPIx pins.

5: To achieve maximum data rate, VDD must be ≥ 3.3V, the SMP bit (SPIxCON<9>) must be equal to ‘1’, and the operating temperature must be within the range of -40°C to +105°C.

A.6 DMA

The DMA controller in PIC32MZ EF devices is similar to the DMA controller in PIC32MX5XX/6XX/7XX devices. New features include the extension of pattern matching to two by bytes and the addition of the optional Pattern Ignore mode. Table A-7 lists differences (indicated by **Bold** type) that will affect software migration.

TABLE A-7: DMA DIFFERENCES

PIC32MX5XX/6XX/7XX Feature	PIC32MZ EF Feature
Read/Write Status on Error	
RDWR (DMASTAT<**3**>) `1` = Last DMA bus access when an error was detected was a read `0` = Last DMA bus access when an error was detected was a write	The RDWR bit has moved from DMASTAT<3> in PIC32MX5XX/6XX/7XX devices to DMASTAT<31> in PIC32MZ EF devices. RDWR (DMASTAT<**31**>) `1` = Last DMA bus access when an error was detected was a read `0` = Last DMA bus access when an error was detected was a write
Source-to-Destination Transfer	
On PIC32MX devices, a DMA channel performs a read of the source data and completes the transfer of this data into the destination address before it is ready to read the next data from the source.	On PIC32MZ EF devices, the DMA implements a 4-deep queue for data transfers. A DMA channel reads the source data and places it into the queue, regardless of whether previous data in the queue has been delivered to the destination address.

© 2015-2016 Microchip Technology Inc.