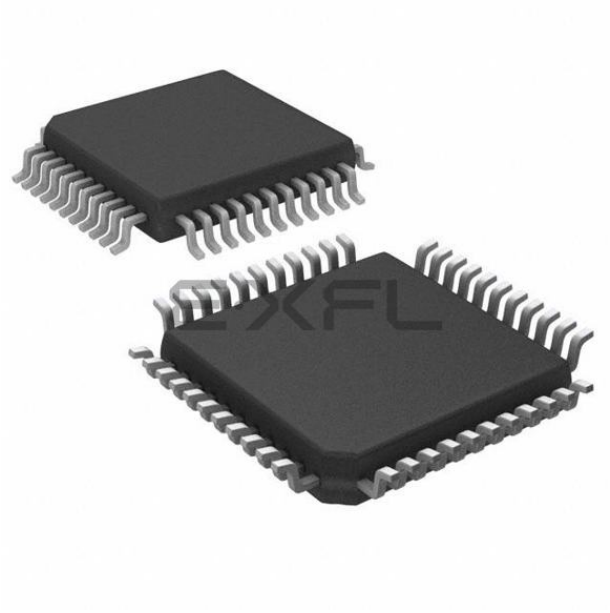

Welcome to E-XFL.COM

What is "Embedded - Microcontrollers"?

"Embedded - Microcontrollers" refer to small, integrated circuits designed to perform specific tasks within larger systems. These microcontrollers are essentially compact computers on a single chip, containing a processor core, memory, and programmable input/output peripherals. They are called "embedded" because they are embedded within electronic devices to control various functions, rather than serving as standalone computers. Microcontrollers are crucial in modern electronics, providing the intelligence and control needed for a wide range of applications.

Applications of "Embedded - Microcontrollers"

Details	
Product Status	Obsolete
Core Processor	80C51
Core Size	8-Bit
Speed	30/20MHz
Connectivity	UART/USART
Peripherals	POR
Number of I/O	32
Program Memory Size	8KB (8K x 8)
Program Memory Type	OTP
EEPROM Size	-
RAM Size	256 x 8
Voltage - Supply (Vcc/Vdd)	2.7V ~ 5.5V
Data Converters	-
Oscillator Type	Internal
Operating Temperature	-40°C ~ 85°C (TA)
Mounting Type	Surface Mount
Package / Case	44-QFP
Supplier Device Package	44-PQFP
Purchase URL	https://www.e-xfl.com/product-detail/microchip-technology/ts87c52x2-lic

Pin Configuration

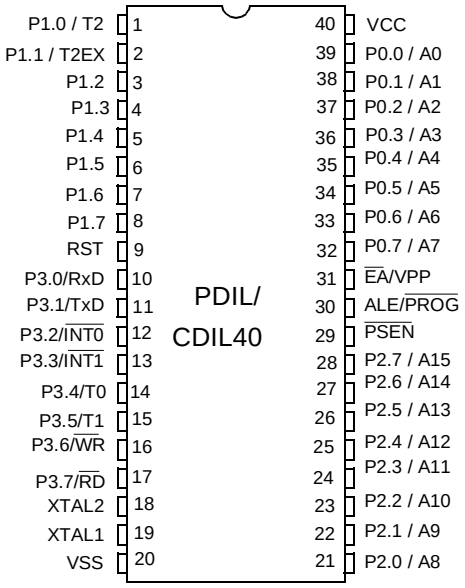

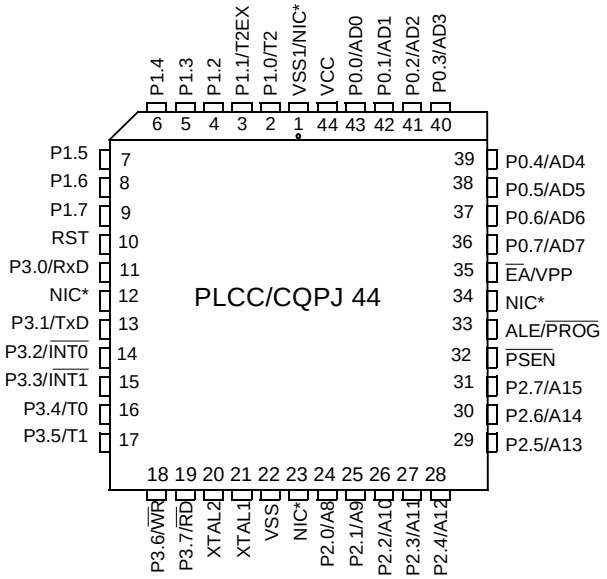

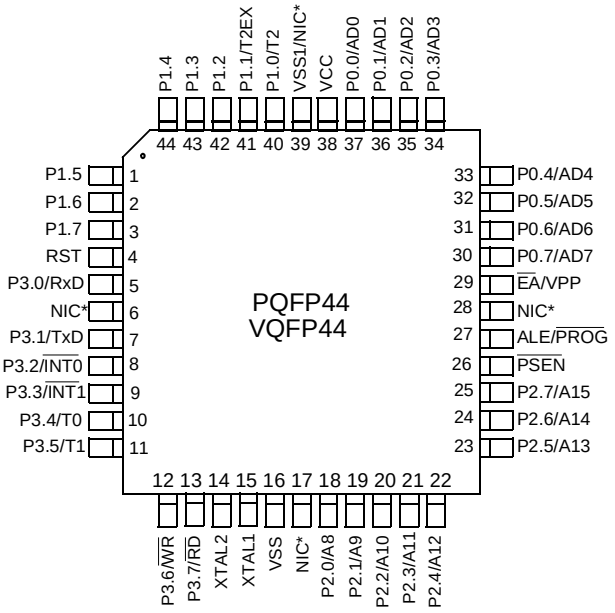

*NIC: No Internal Connection

TS80C52X2 Enhanced Features

In comparison to the original 80C52, the TS80C52X2 implements some new features, which are:

- The X2 option
- The Dual Data Pointer
- The 4 level interrupt priority system
- The power-off flag
- The ONCE mode
- The ALE disabling
- Some enhanced features are also located in the UART and the Timer 2

X2 Feature

The TS80C52X2 core needs only 6 clock periods per machine cycle. This feature called ”X2” provides the following advantages:

- Divide frequency crystals by 2 (cheaper crystals) while keeping same CPU power
- Save power consumption while keeping same CPU power (oscillator power saving)
- Save power consumption by dividing dynamically operating frequency by 2 in operating and idle modes
- Increase CPU power by 2 while keeping same crystal frequency

In order to keep the original C51 compatibility, a divider by 2 is inserted between the XTAL1 signal and the main clock input of the core (phase generator). This divider may be disabled by software.

Description

The clock for the whole circuit and peripheral is first divided by two before being used by the CPU core and peripherals. This allows any cyclic ratio to be accepted on XTAL1 input. In X2 mode, as this divider is bypassed, the signals on XTAL1 must have a cyclic ratio between 40 to 60%. Figure 1. shows the clock generation block diagram. X2 bit is validated on XTAL1÷2 rising edge to avoid glitches when switching from X2 to STD mode. Figure 2 shows the mode switching waveforms.
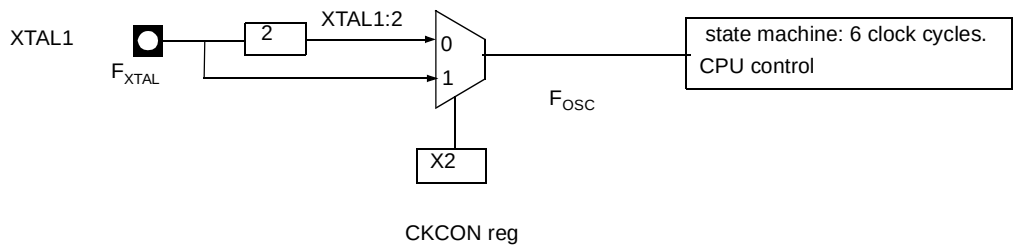
Figure 1. Clock Generation Diagram