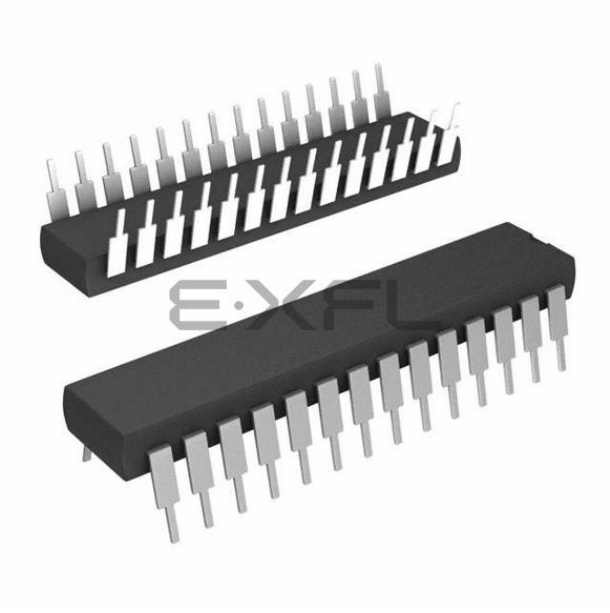

Welcome to E-XFL.COM

What is "Embedded - Microcontrollers"?

"Embedded - Microcontrollers" refer to small, integrated circuits designed to perform specific tasks within larger systems. These microcontrollers are essentially compact computers on a single chip, containing a processor core, memory, and programmable input/output peripherals. They are called "embedded" because they are embedded within electronic devices to control various functions, rather than serving as standalone computers. Microcontrollers are crucial in modern electronics, providing the intelligence and control needed for a wide range of applications.

Applications of "Embedded - Microcontrollers"

Details	
Product Status	Active
Core Processor	dsPIC
Core Size	16-Bit
Speed	60 MIPs
Connectivity	CANbus, I²C, IrDA, LINbus, SPI, UART/USART
Peripherals	Brown-out Detect/Reset, DMA, Motor Control PWM, POR, PWM, WDT
Number of I/O	21
Program Memory Size	64KB (22K x 24)
Program Memory Type	FLASH
EEPROM Size	-
RAM Size	8K x 8
Voltage - Supply (Vcc/Vdd)	4.5V ~ 5.5V
Data Converters	A/D 11x10/12b
Oscillator Type	Internal
Operating Temperature	-40°C ~ 125°C (TA)
Mounting Type	Through Hole
Package / Case	28-DIP (0.300", 7.62mm)
Supplier Device Package	28-SPDIP
Purchase URL	https://www.e-xfl.com/product-detail/microchip-technology/dspic33ev64gm102-e-sp

Pin Diagrams

28-Pin SPDIP/SOIC/SSOP(1,2,3)

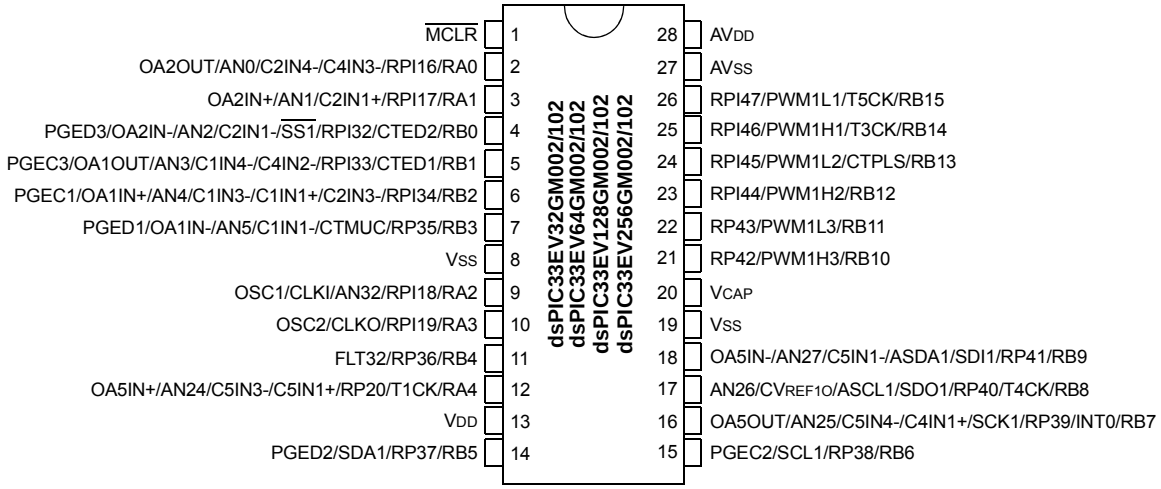

Note 1: The RPn/RPIn pins can be used by any remappable peripheral with some limitation. See **Section 11.5 “Peripheral Pin Select (PPS)”** for available peripherals and information on limitations.

2: Every I/O port pin (RAx-RGx) can be used as a Change Notification pin (CNAx-CNGx). See **Section 11.0 “I/O Ports”** for more information.

3: If the op amp is selected when OPAEN (CMxCON<10>) = 1, the OAx input is used; otherwise, the ANx input is used.

© 2013-2016 Microchip Technology Inc.

4.3 Special Function Register Maps

TABLE 4-1: CPU CORE REGISTER MAP

SFR Name	Addr.	Bit 15	Bit 14	Bit 13	Bit 12	Bit 11	Bit 10	Bit 9	Bit 8	Bit 7	Bit 6	Bit 5	Bit 4	Bit 3	Bit 2	Bit 1	Bit 0	All Resets
W0	0000	W0 (WREG)																0000
W1	0002	W1																0000
W2	0004	W2																0000
W3	0006	W3																0000
W4	0008	W4																0000
W5	000A	W5																0000
W6	000C	W6																0000
W7	000E	W7																0000
W8	0010	W8																0000
W9	0012	W9																0000
W10	0014	W10																0000
W11	0016	W11																0000
W12	0018	W12																0000
W13	001A	W13																0000
W14	001C	W14																0000
W15	001E	W15																0800
SPLIM	0020	SPLIM																xxxx
ACCAL	0022	ACCAL																xxxx
ACCAH	0024	ACCAH																xxxx
ACCAU	0026	Sign Extension of ACCA<39>								ACCAU								xxxx
ACCBL	0028	ACCBL																xxxx
ACCBH	002A	ACCBH																xxxx
ACCBU	002C	Sign Extension of ACCB<39>								ACCBU								xxxx
PCL	002E	Program Counter Low Word Register															—	0000
PCH	0030	—	—	—	—	—	—	—	—	—	Program Counter High Word Register							0000
DSRPAG	0032	—	—	—	—	—	—	Data Space Read Page Register										0001
DSWPAG	0034	—	—	—	—	—	—	—	Data Space Write Page Register									0001
RCOUNT	0036	REPEAT Loop Counter Register															0	xxxx
DCOUNT	0038	DCOUNT<15:1>															0	xxxx
DOSTARTL	003A	DOSTARTL<15:1>															0	xxxx
DOSTARTH	003C	—	—	—	—	—	—	—	—	—	—	DOSTARTH<5:0>						00xx
DOENDL	003E	DOENDL<15:1>															—	xxxx

Legend: x = unknown value on Reset; — = unimplemented, read as '0'. Reset values are shown in hexadecimal.

© 2013-2016 Microchip Technology Inc.

FIGURE 4-16: BIT-REVERSED ADDRESSING EXAMPLE

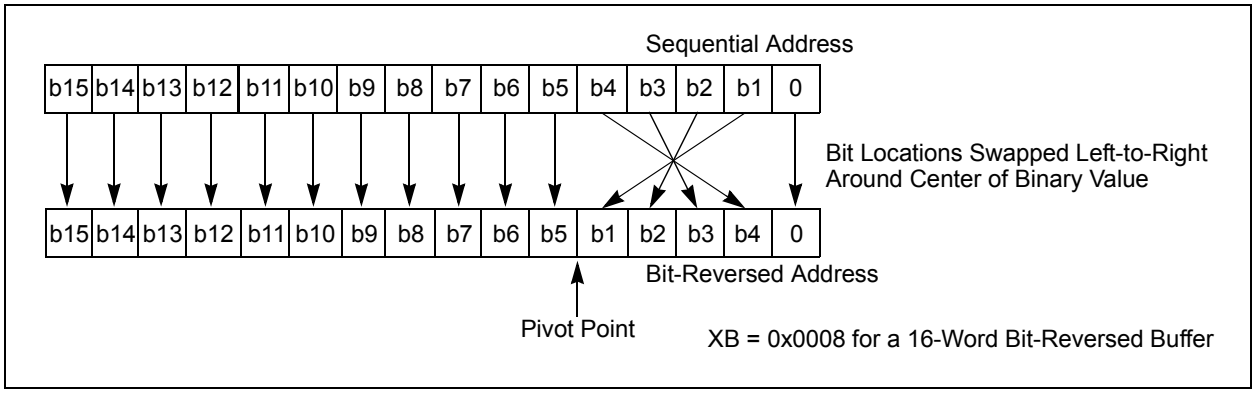

TABLE 4-46: BIT-REVERSED ADDRESSING SEQUENCE (16-ENTRY)

Normal Address					Bit-Reversed Address				
A3	A2	A1	A0	Decimal	A3	A2	A1	A0	Decimal
0	0	0	0	0	0	0	0	0	0
0	0	0	1	1	1	0	0	0	8
0	0	1	0	2	0	1	0	0	4
0	0	1	1	3	1	1	0	0	12
0	1	0	0	4	0	0	1	0	2
0	1	0	1	5	1	0	1	0	10
0	1	1	0	6	0	1	1	0	6
0	1	1	1	7	1	1	1	0	14
1	0	0	0	8	0	0	0	1	1
1	0	0	1	9	1	0	0	1	9
1	0	1	0	10	0	1	0	1	5
1	0	1	1	11	1	1	0	1	13
1	1	0	0	12	0	0	1	1	3
1	1	0	1	13	1	0	1	1	11
1	1	1	0	14	0	1	1	1	7
1	1	1	1	15	1	1	1	1	15

© 2013-2016 Microchip Technology Inc.

FIGURE 6-1: RESET SYSTEM BLOCK DIAGRAM

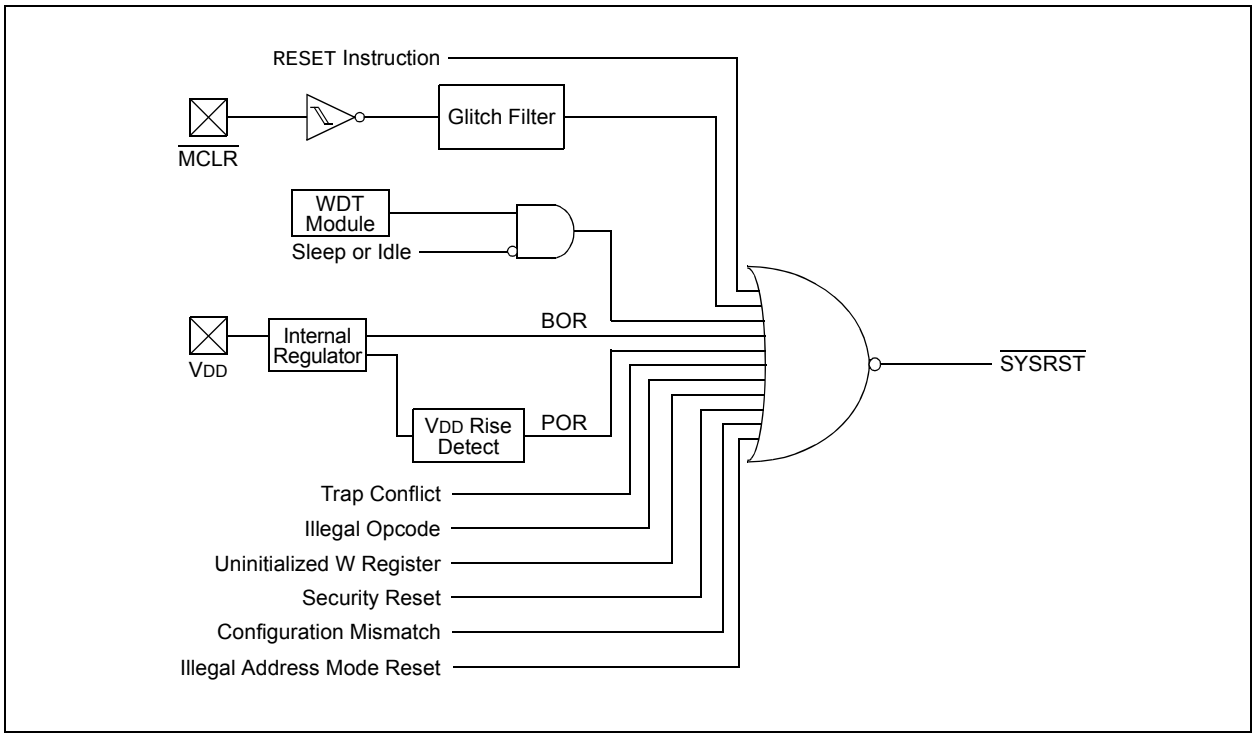

© 2013-2016 Microchip Technology Inc.

16.0 OUTPUT COMPARE

Note 1: This data sheet summarizes the features of the dsPIC33EVXXXGM00X/10X family of devices. It is not intended to be a comprehensive reference source. To complement the information in this data sheet, refer to **"Output Compare"** (DS70005157) in the *"dsPIC33/PIC24 Family Reference Manual"*, which is available from the Microchip web site (www.microchip.com).

2: Some registers and associated bits described in this section may not be available on all devices. Refer to **Section 4.0 "Memory Organization"** in this data sheet for device-specific register and bit information.

The dsPIC33EVXXXGM00X/10X family devices support up to 4 output compare modules. The output compare module can select one of eight available clock sources for its time base. The module compares the value of the timer with the value of one or two Compare registers, depending on the operating mode selected. The state of the output pin changes when the timer value matches the Compare register value. The output compare module generates either a single output pulse, or a sequence of output pulses, by changing the state of the output pin on the compare match events. The output compare module can also generate interrupts on compare match events and trigger DMA data transfers.

Figure 16-1 shows a block diagram of the output compare module.

Note: For more information on OCxR and OCxRS register restrictions, refer to the **"Output Compare"** (DS70005157) section in the *"dsPIC33/PIC24 Family Reference Manual"*.

FIGURE 16-1: OUTPUT COMPARE x MODULE BLOCK DIAGRAM

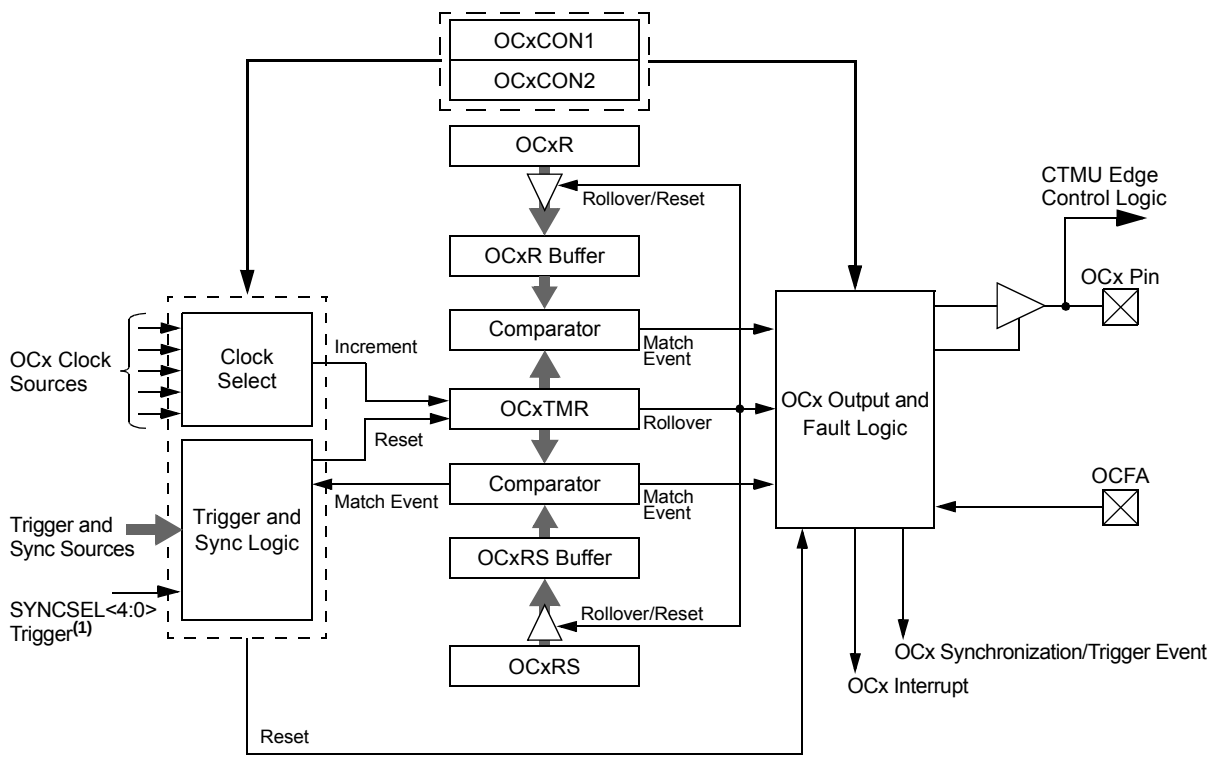

Note 1: The trigger/sync source is enabled by default and is set to Timer2 as a source. This timer must be enabled for proper OCx module operation or the trigger/sync source must be changed to another source option.

16.1 Output Compare Control Registers

REGISTER 16-1: OCxCON1: OUTPUT COMPARE x CONTROL REGISTER 1

U-0	U-0	R/W-0	R/W-0	R/W-0	R/W-0	U-0	U-0
—	—	OCSIDL	OCTSEL2	OCTSEL1	OCTSEL0	—	—
bit 15							bit 8

R/W-0	U-0	U-0	R/W-0, HSC	R/W-0	R/W-0	R/W-0	R/W-0
ENFLTA	—	—	OCFLTA	TRIGMODE	OCM2	OCM1	OCM0
bit 7							bit 0

Legend:	HSC = Hardware Settable/Clearable bit		
R = Readable bit	W = Writable bit	U = Unimplemented bit, read as ‘0’	
-n = Value at POR	‘1’ = Bit is set	‘0’ = Bit is cleared	x = Bit is unknown

bit 15-14 **Unimplemented:** Read as ‘0’

bit 13 **OCSIDL:** Output Compare x Stop in Idle Mode Control bit
1 = Output Compare x halts in CPU Idle mode
0 = Output Compare x continues to operate in CPU Idle mode

bit 12-10 **OCTSEL<2:0>:** Output Compare x Clock Select bits
111 = Peripheral clock (FP)
110 = Reserved
101 = Reserved
100 = T1CLK is the clock source of the OCx (only the synchronous clock is supported)
011 = T5CLK is the clock source of the OCx
010 = T4CLK is the clock source of the OCx
001 = T3CLK is the clock source of the OCx
000 = T2CLK is the clock source of the OCx

bit 9-8 **Unimplemented:** Read as ‘0’

bit 7 **ENFLTA:** Output Compare x Fault A Input Enable bit
1 = Output Compare Fault A (OCFA) input is enabled
0 = Output Compare Fault A (OCFA) input is disabled

bit 6-5 **Unimplemented:** Read as ‘0’

bit 4 **OCFLTA:** PWM Fault A Condition Status bit
1 = PWM Fault A condition on the OCFA pin has occurred
0 = PWM Fault A condition on the OCFA pin has not occurred

bit 3 **TRIGMODE:** Trigger Status Mode Select bit
1 = TRIGSTAT (OCxCON2<6>) is cleared when OCxRS = OCxTMR or in software
0 = TRIGSTAT is cleared only by software

Note 1: OCxR and OCxRS are double-buffered in PWM mode only.

© 2013-2016 Microchip Technology Inc.

17.2 PWM Resources

Many useful resources are provided on the main product page on the Microchip web site (www.microchip.com) for the devices listed in this data sheet. This product page contains the latest updates and additional information.

Note:	In case the above link is not accessible, enter this URL in your browser: http://www.microchip.com/wwwproducts/Devices.aspx?dDocName=en555464

17.2.1 KEY RESOURCES

- **"High-Speed PWM"** (DS70645) in the *"dsPIC33/PIC24 Family Reference Manual"*
- Code Samples
- Application Notes
- Software Libraries
- Webinars
- All Related *"dsPIC33/PIC24 Family Reference Manual"* Sections
- Development Tools

21.2 UART Control Registers

REGISTER 21-1: UxMODE: UARTx MODE REGISTER

R/W-0	U-0	R/W-0	R/W-0	R/W-0	U-0	R/W-0	R/W-0
UARTEN(1)	—	USIDL	IREN(2)	RTSMD	—	UEN1	UEN0
bit 15							bit 8

R/W-0, HC	R/W-0	R/W-0, HC	R/W-0	R/W-0	R/W-0	R/W-0	R/W-0
WAKE	LPBACK	ABAUD	URXINV	BRGH	PDSEL1	PDSEL0	STSEL
bit 7							bit 0

Legend:	HC = Hardware Clearable bit		
R = Readable bit	W = Writable bit	U = Unimplemented bit, read as ‘0’	
-n = Value at POR	‘1’ = Bit is set	‘0’ = Bit is cleared	x = Bit is unknown

bit 15 **UARTEN:** UARTx Enable bit(1)
- 1 = UARTx is enabled; all UARTx pins are controlled by UARTx as defined by UEN<1:0>
- 0 = UARTx is disabled; all UARTx pins are controlled by PORT latches; UARTx power consumption is minimal

bit 14 **Unimplemented:** Read as ‘0’

bit 13 **USIDL:** UARTx Stop in Idle Mode bit
- 1 = Discontinues module operation when the device enters Idle mode
- 0 = Continues module operation in Idle mode

bit 12 **IREN:** IrDA® Encoder and Decoder Enable bit(2)
- 1 = IrDA encoder and decoder are enabled
- 0 = IrDA encoder and decoder are disabled

bit 11 **RTSMD:** Mode Selection for $\overline{\text{UxRTS}}$ Pin bit
- 1 = $\overline{\text{UxRTS}}$ pin is in Simplex mode
- 0 = $\overline{\text{UxRTS}}$ pin is in Flow Control mode

bit 10 **Unimplemented:** Read as ‘0’

bit 9-8 **UEN<1:0>:** UARTx Pin Enable bits
- 11 = UxTX, UxRX and BCLKx pins are enabled and used; $\overline{\text{UxCTS}}$ pin is controlled by PORT latches(3)
- 10 = UxTX, UxRX, $\overline{\text{UxCTS}}$ and $\overline{\text{UxRTS}}$ pins are enabled and used(4)
- 01 = UxTX, UxRX and $\overline{\text{UxRTS}}$ pins are enabled and used; $\overline{\text{UxCTS}}$ pin is controlled by PORT latches(4)
- 00 = UxTX and UxRX pins are enabled and used; $\overline{\text{UxCTS}}$ and $\overline{\text{UxRTS}}$/BCLKx pins are controlled by PORT latches

bit 7 **WAKE:** UARTx Wake-up on Start bit Detect During Sleep Mode Enable bit
- 1 = UARTx continues to sample the UxRX pin; interrupt is generated on the falling edge, bit is cleared in hardware on the following rising edge
- 0 = Wake-up is not enabled

bit 6 **LPBACK:** UARTx Loopback Mode Select bit
- 1 = Loopback mode is enabled
- 0 = Loopback mode is disabled

Note 1: Refer to **“Universal Asynchronous Receiver Transmitter (UART)”** (DS70000582) in the *“dsPIC33/PIC24 Family Reference Manual”* for information on enabling the UART module for receive or transmit operation.

2: This feature is only available for the 16x BRG mode (BRGH = 0).

3: This feature is only available on 44-pin and 64-pin devices.

4: This feature is only available on 64-pin devices.

REGISTER 22-2: CxCTRL2: CANx CONTROL REGISTER 2

U-0	U-0	U-0	U-0	U-0	U-0	U-0	U-0
—	—	—	—	—	—	—	—
bit 15							bit 8

U-0	U-0	U-0	R-0	R-0	R-0	R-0	R-0
—	—	—	DNCNT<4:0>				
bit 7							bit 0

Legend:			
R = Readable bit	W = Writable bit	U = Unimplemented bit, read as ‘0’	
-n = Value at POR	‘1’ = Bit is set	‘0’ = Bit is cleared	x = Bit is unknown

bit 15-5 **Unimplemented:** Read as ‘0’

bit 4-0 **DNCNT<4:0>:** DeviceNet™ Filter Bit Number bits

10010-11111 = Invalid selection
10001 = Compare up to Data Byte 3, bit 6 with EID<17>
•
•
•
00001 = Compare up to Data Byte 1, bit 7 with EID<0>
00000 = Do not compare data bytes

© 2013-2016 Microchip Technology Inc.

REGISTER 24-5: ADxCHS123: ADCx INPUT CHANNELS 1, 2, 3 SELECT REGISTER

U-0	U-0	U-0	R/W-0	R/W-0	R/W-0	R/W-0	R/W-0
—	—	—	CH123SB2	CH123SB1	CH123NB1	CH123NB0	CH123SB0
bit 15							bit 8

U-0	U-0	U-0	R/W-0	R/W-0	R/W-0	R/W-0	R/W-0
—	—	—	CH123SA2	CH123SA1	CH123NA1	CH123NA0	CH123SA0
bit 7							bit 0

Legend:			
R = Readable bit	W = Writable bit	U = Unimplemented bit, read as ‘0’	
-n = Value at POR	‘1’ = Bit is set	‘0’ = Bit is cleared	x = Bit is unknown

bit 15-13 **Unimplemented:** Read as ‘0’

bit 12-11 **CH123SB<2:1>:** Channels 1, 2, 3 Positive Input Select for Sample B bits
- 1xx = CH1 positive input is AN0 (Op Amp 2), CH2 positive input is AN25 (Op Amp 5), CH3 positive input is AN6 (Op Amp 3)
- 011 = CH1 positive input is AN3 (Op Amp 1), CH2 positive input is AN0 (Op Amp 2), CH3 positive input is AN25 (Op Amp 5)
- 010 = CH1 positive input is AN3 (Op Amp 1), CH2 positive input is AN0 (Op Amp 2), CH3 positive input is AN6 (Op Amp 3)
- 001 = CH1 positive input is AN3, CH2 positive input is AN4, CH3 positive input is AN5
- 000 = CH1 positive input is AN0, CH2 positive input is AN1, CH3 positive input is AN2

bit 10-9 **CH123NB<1:0>:** Channels 1, 2, 3 Negative Input Select for Sample B bits
- 11 = CH1 negative input is AN9, CH2 negative input is AN10, CH3 negative input is AN11
- 10 = CH1 negative input is AN6, CH2 negative input is AN7, CH3 negative input is AN8
- 0x = CH1, CH2, CH3 negative inputs are VREFL

bit 8 **CH123SB0:** Channels 1, 2, 3 Positive Input Select for Sample B bit

See bits<12:11> for bit selections.

bit 7-5 **Unimplemented:** Read as ‘0’

bit 4-3 **CH123SA<2:1>:** Channels 1, 2, 3 Positive Input Select for Sample A bits
- 1xx = CH1 positive input is AN0 (Op Amp 2), CH2 positive input is AN25 (Op Amp 5), CH3 positive input is AN6 (Op Amp 3)
- 011 = CH1 positive input is AN3 (Op Amp 1), CH2 positive input is AN0 (Op Amp 2), CH3 positive input is AN25 (Op Amp 5)
- 010 = CH1 positive input is AN3 (Op Amp 1), CH2 positive input is AN0 (Op Amp 2), CH3 positive input is AN6 (Op Amp 3)
- 001 = CH1 positive input is AN3, CH2 positive input is AN4, CH3 positive input is AN5
- 000 = CH1 positive input is AN0, CH2 positive input is AN1, CH3 positive input is AN2

bit 2-1 **CH123NA<1:0>:** Channels 1, 2, 3 Negative Input Select for Sample A bits
- 11 = CH1 negative input is AN9, CH2 negative input is AN10, CH3 negative input is AN11
- 10 = CH1 negative input is AN6, CH2 negative input is AN7, CH3 negative input is AN8
- 0x = CH1, CH2, CH3 negative inputs are VREFL

bit 0 **CH123SA0:** Channels 1, 2, 3 Positive Input Select for Sample A bit

See bits<4:3> for bit selections.

REGISTER 25-2: CMxCON: COMPARATOR x CONTROL REGISTER (x = 1, 2, 3 OR 5) (CONTINUED)

bit 7-6 **EVPOL<1:0>:** Trigger/Event/Interrupt Polarity Select bits(3)

11 = Trigger/event/interrupt generated on any change of the comparator output (while CEVT = 0)

10 = Trigger/event/interrupt generated only on high-to-low transition of the polarity selected comparator output (while CEVT = 0)

If CPOL = 1 (inverted polarity):
Low-to-high transition of the comparator output.

If CPOL = 0 (non-inverted polarity):
High-to-low transition of the comparator output.

01 = Trigger/event/interrupt generated only on low-to-high transition of the polarity selected comparator output (while CEVT = 0)

If CPOL = 1 (inverted polarity):
High-to-low transition of the comparator output.

If CPOL = 0 (non-inverted polarity):
Low-to-high transition of the comparator output.

00 = Trigger/event/interrupt generation is disabled

bit 5 **Unimplemented:** Read as '0'

bit 4 **CREF:** Comparator x Reference Select bit (V_{IN}+ input)(1)

1 = V_{IN}+ input connects to the internal CV_{REFIN} voltage
0 = V_{IN}+ input connects to the CxIN1+ pin

bit 3-2 **Unimplemented:** Read as '0'

bit 1-0 **CCH<1:0>:** Op Amp/Comparator x Channel Select bits(1)

11 = Inverting input of op amp/comparator connects to the CxIN4- pin
10 = Inverting input of op amp/comparator connects to the CxIN3- pin
01 = Inverting input of op amp/comparator connects to the CxIN2- pin
00 = Inverting input of op amp/comparator connects to the CxIN1- pin

Note 1: Inputs that are selected and not available will be tied to V_{SS}. See the **"Pin Diagrams"** section for available inputs for each package.

2: The op amp and the comparator can be used simultaneously in these devices. The OPAEN bit only enables the op amp while the comparator is still functional.

3: After configuring the comparator, either for a high-to-low or low-to-high COUT transition (EVPOL<1:0> (CMxCON<7:6>) = 10 or 01), the Comparator x Event bit, CEVT (CMxCON<9>), and the Comparator Interrupt Flag, CMPIF (IFS1<2>), must be cleared before enabling the Comparator Interrupt Enable bit, CMPIE (IEC1<2>).

30.1 DC Characteristics

TABLE 30-1: OPERATING MIPS vs. VOLTAGE

Characteristic	V_{DD} Range (in Volts)	Temperature Range (in °C)	Maximum MIPS
			dsPIC33EVXXXGM00X/10X Family
I-Temp	4.5V to 5.5V(1,2)	-40°C to +85°C	70
E-Temp	4.5V to 5.5V(1,2)	-40°C to +125°C	60

Note 1: Device is functional at $V_{BORMIN} < V_{DD} < V_{DDMIN}$. Analog modules: ADC, op amp/comparator and comparator voltage reference will have degraded performance. Device functionality is tested but not characterized. Refer to Parameter BO10 in Table 30-12 for the minimum and maximum BOR values.

2: When BOR is enabled, the device will work from 4.7V to 5.5V.

Note 1: Customer operating voltage range is specified as: 4.5V to 5.5V.

TABLE 30-2: THERMAL OPERATING CONDITIONS

Rating	Symbol	Min.	Typ.	Max.	Unit
Industrial Temperature Devices:					
Operating Junction Temperature Range	T_J	-40	—	+125	°C
Operating Ambient Temperature Range	T_A	-40	—	+85	°C
Extended Temperature Devices:					
Operating Junction Temperature Range	T_J	-40	—	+140	°C
Operating Ambient Temperature Range	T_A	-40	—	+125	°C
Power Dissipation: Internal Chip Power Dissipation: $P_{INT} = V_{DD} \times (I_{DD} - \Sigma I_{OH})$ I/O Pin Power Dissipation: $I/O = \Sigma (\{V_{DD} - V_{OH}\} \times I_{OH}) + \Sigma (V_{OL} \times I_{OL})$	P_D	$P_{INT} + P_{I/O}$			W
Maximum Allowed Power Dissipation	P_{DMAX}	$(T_J - T_A)/\theta_{JA}$			W

TABLE 30-3: THERMAL PACKAGING CHARACTERISTICS

Characteristic	Symbol	Typ.	Max.	Unit	Notes
Package Thermal Resistance, 64-Pin QFN, 9x9x0.9 mm	θ_{JA}	28.0	—	°C/W	1
Package Thermal Resistance, 64-Pin TQFP, 10x10x1 mm	θ_{JA}	48.3	—	°C/W	1
Package Thermal Resistance, 44-Pin QFN, 8x8 mm	θ_{JA}	29.0	—	°C/W	1
Package Thermal Resistance, 44-Pin TQFP, 10x10x1 mm	θ_{JA}	49.8	—	°C/W	1
Package Thermal Resistance, 28-Pin QFN-S, 6x6x0.9 mm	θ_{JA}	30.0	—	°C/W	1
Package Thermal Resistance, 28-Pin SOIC, 7.50 mm	θ_{JA}	69.7	—	°C/W	1
Package Thermal Resistance, 28-Pin SSOP, 5.30 mm	θ_{JA}	71.0	—	°C/W	1
Package Thermal Resistance, 28-Pin SPDIP, 300 mil	θ_{JA}	60.0	—	°C/W	1

Note 1: Junction to ambient thermal resistance, Theta-JA (θ_{JA}) numbers are achieved by package simulations.

© 2013-2016 Microchip Technology Inc.

TABLE 30-4: DC TEMPERATURE AND VOLTAGE SPECIFICATIONS

DC CHARACTERISTICS			Standard Operating Conditions (see Note 3): 4.5V to 5.5V (unless otherwise stated) Operating temperature -40°C ≤ TA ≤ +85°C for Industrial -40°C ≤ TA ≤ +125°C for Extended				
Param No.	**Symbol**	**Characteristic**	**Min.**	**Typ.(1)**	**Max.**	**Units**	**Conditions**
Operating Voltage							
DC10	VDD	**Supply Voltage(3)**	VBOR	—	5.5	V	
DC12	VDR	**RAM Data Retention Voltage(2)**	1.8	—	—	V	
DC16	VPOR	**VDD Start Voltage** to Ensure Internal Power-on Reset Signal	—	—	VSS	V	
DC17	SVDD	**VDD Rise Rate** to Ensure Internal Power-on Reset Signal	1.0	—	—	V/ms	0V-5.0V in 5 ms
DC18	VCORE	**VDD Core** Internal Regulator Voltage	1.62	1.8	1.98	V	Voltage is dependent on load, temperature and VDD

Note 1: Data in “Typ.” column is at 5.0V, +25°C unless otherwise stated.
2: This is the limit to which VDD may be lowered without losing RAM data.
3: VDD voltage must remain at VSS for a minimum of 200 μs to ensure POR.

TABLE 30-5: FILTER CAPACITOR (CEFC) SPECIFICATIONS

Standard Operating Conditions (unless otherwise stated): Operating temperature -40°C ≤ TA ≤ +85°C for Industrial -40°C ≤ TA ≤ +125°C for Extended							
Param No.	**Symbol**	**Characteristics**	**Min.**	**Typ.**	**Max.**	**Units**	**Comments**
	CEFC	External Filter Capacitor Value(1)	4.7	10	—	μF	Capacitor must have a low series resistance (< 1Ω)

Note 1: Typical VCAP Voltage = 1.8 volts when VDD ≥ VDDMIN.

FIGURE 30-22: SPI1 MASTER MODE (FULL-DUPLEX, CKE = 1, CKP = x, SMP = 1) TIMING CHARACTERISTICS

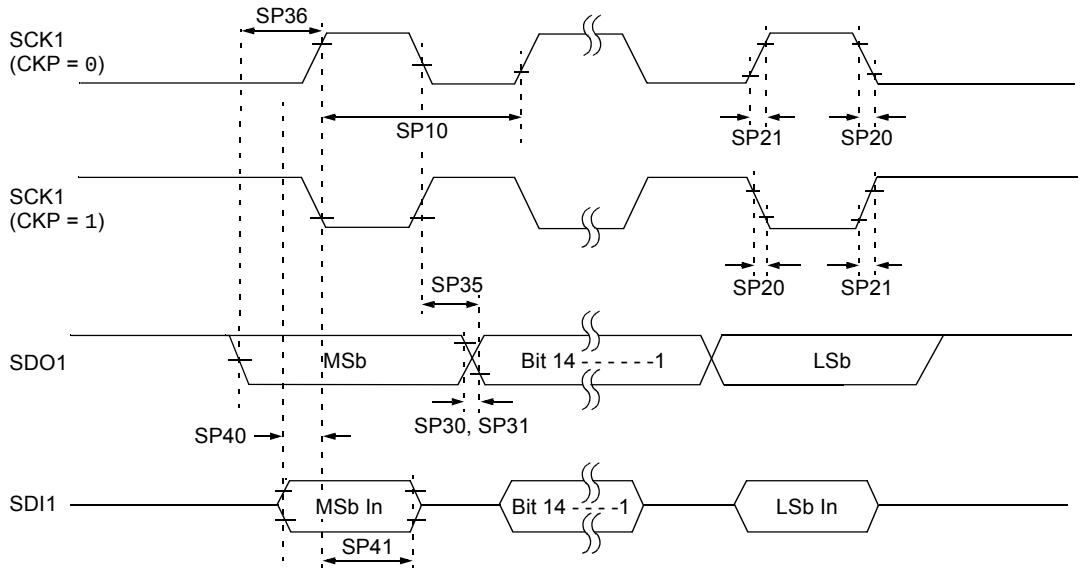

Note: Refer to Figure 30-1 for load conditions.

TABLE 30-40: SPI1 MASTER MODE (FULL-DUPLEX, CKE = 1, CKP = x, SMP = 1) TIMING REQUIREMENTS

AC CHARACTERISTICS			Standard Operating Conditions: 4.5V to 5.5V (unless otherwise stated) Operating temperature -40°C ≤ TA ≤ +85°C for Industrial -40°C ≤ TA ≤ +125°C for Extended				
Param.	**Symbol**	**Characteristic(1)**	**Min.**	**Typ.(2)**	**Max.**	**Units**	**Conditions**
SP10	FscP	Maximum SCK1 Frequency	—	—	25	MHz	See **Note 3**
SP20	TscF	SCK1 Output Fall Time	—	—	—	ns	See Parameter DO32 and **Note 4**
SP21	TscR	SCK1 Output Rise Time	—	—	—	ns	See Parameter DO31 and **Note 4**
SP30	TdoF	SDO1 Data Output Fall Time	—	—	—	ns	See Parameter DO32 and **Note 4**
SP31	TdoR	SDO1 Data Output Rise Time	—	—	—	ns	See Parameter DO31 and **Note 4**
SP35	TscH2doV, TscL2doV	SDO1 Data Output Valid after SCK1 Edge	—	6	20	ns	
SP36	TdoV2sc, TdoV2scL	SDO1 Data Output Setup to First SCK1 Edge	20	—	—	ns	
SP40	TdiV2scH, TdiV2scL	Setup Time of SDI1 Data Input to SCK1 Edge	20	—	—	ns	
SP41	TscH2diL, TscL2diL	Hold Time of SDI1 Data Input to SCK1 Edge	15	—	—	ns	

Note 1: These parameters are characterized but not tested in manufacturing.
2: Data in “Typ.” column is at 5.0V, +25°C unless otherwise stated.
3: The minimum clock period for SCK1 is 40 ns. Therefore, the clock generated in Master mode must not violate this specification.
4: Assumes 50 pF load on all SPI1 pins.

© 2013-2016 Microchip Technology Inc.

32.12 VBOR

FIGURE 32-35: TYPICAL BOR TRIP RANGE vs. TEMPERATURE

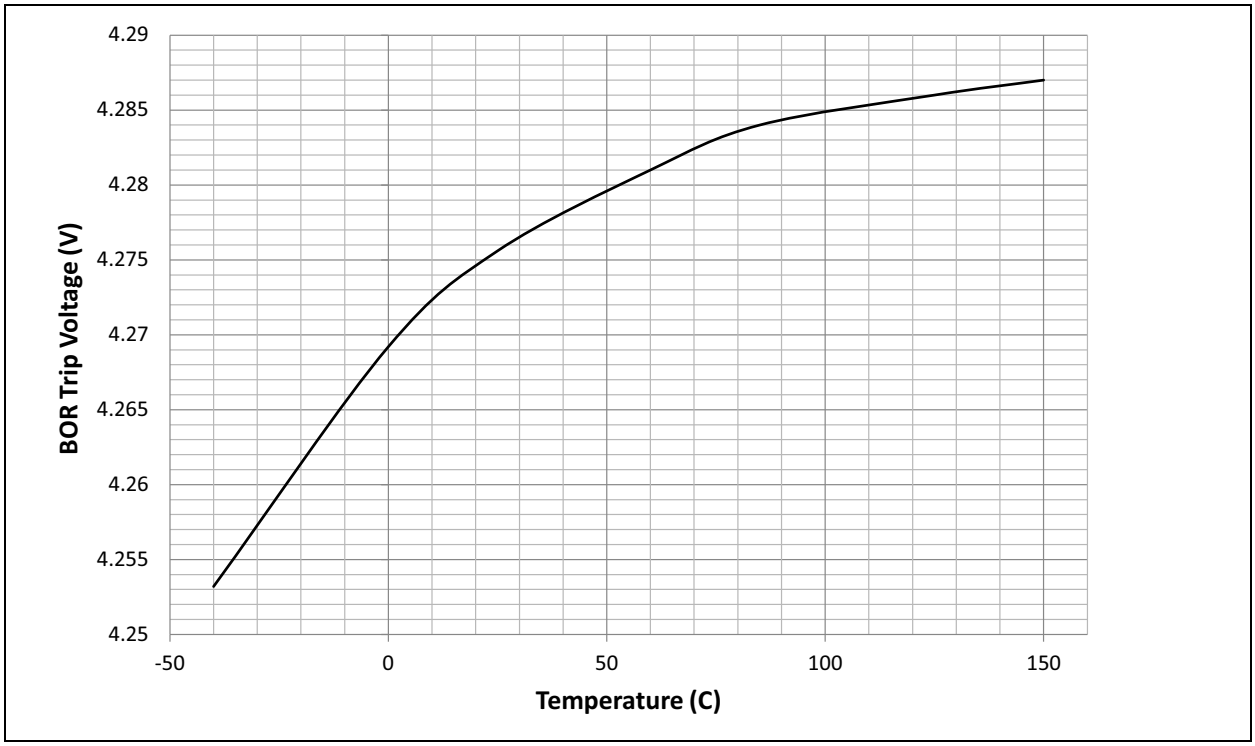

32.13 RAM Retention

FIGURE 32-36: TYPICAL RAM RETENTION VOLTAGE vs. TEMPERATURE

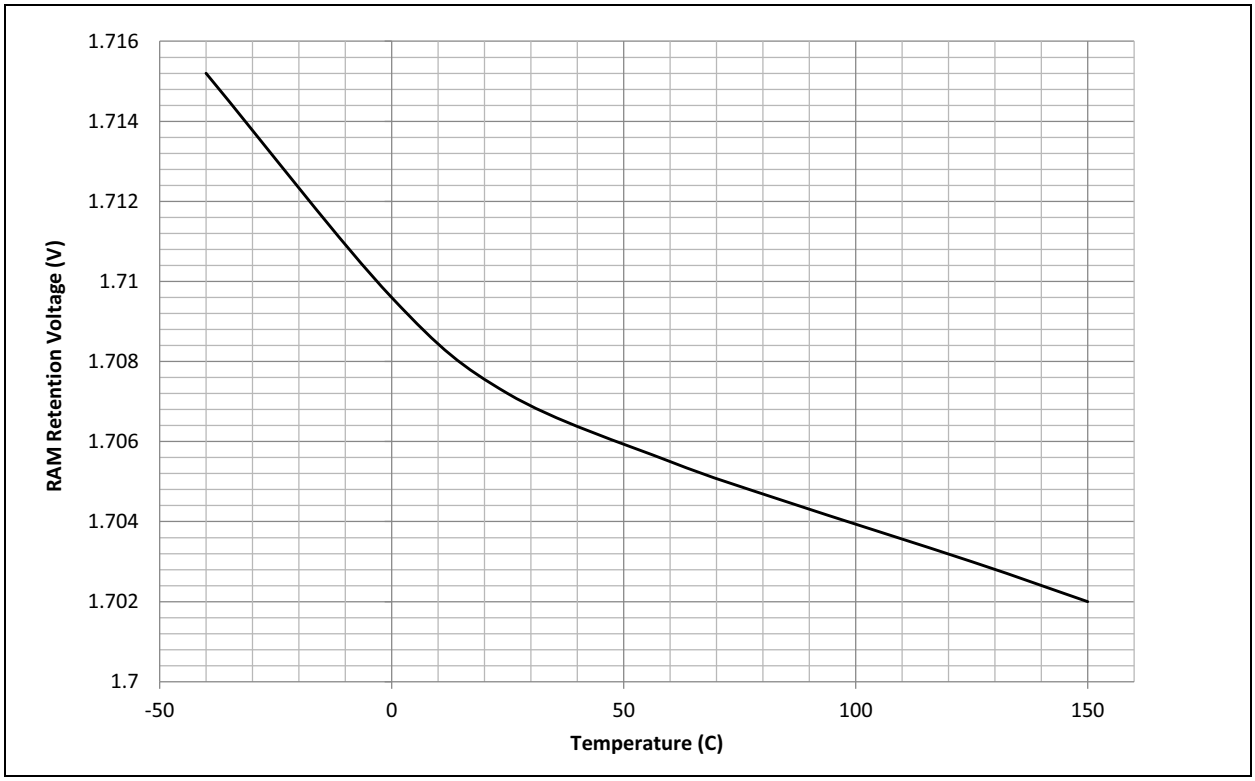

© 2013-2016 Microchip Technology Inc.

28-Lead Plastic Small Outline (SO) - Wide, 7.50 mm Body [SOIC]

Note: For the most current package drawings, please see the Microchip Packaging Specification located at http://www.microchip.com/packaging

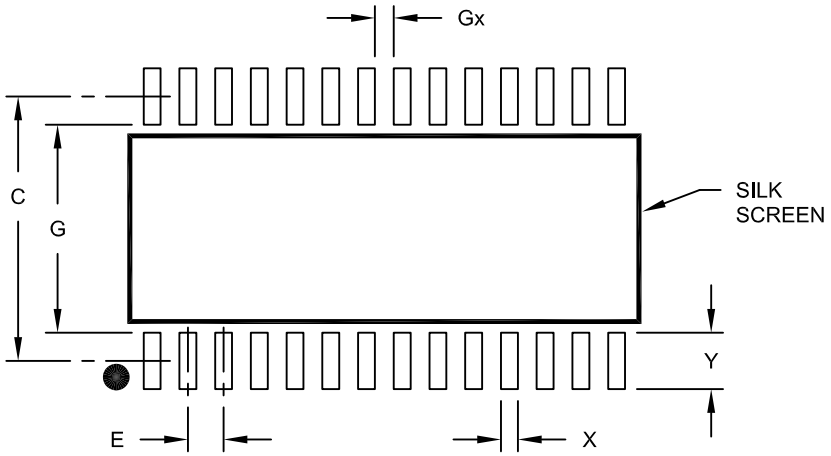

RECOMMENDED LAND PATTERN

Units		MILLIMETERS		
Dimension Limits		MIN	NOM	MAX
Contact Pitch	E	1.27 BSC		
Contact Pad Spacing	C		9.40	
Contact Pad Width (X28)	X			0.60
Contact Pad Length (X28)	Y			2.00
Distance Between Pads	Gx	0.67		
Distance Between Pads	G	7.40		

Notes:

1. Dimensioning and tolerancing per ASME Y14.5M
   BSC: Basic Dimension. Theoretically exact value shown without tolerances.

Microchip Technology Drawing No. C04-2052A

© 2013-2016 Microchip Technology Inc.

44-Lead Plastic Thin Quad Flatpack (PT) - 10x10x1.0 mm Body [TQFP]

Note: For the most current package drawings, please see the Microchip Packaging Specification located at http://www.microchip.com/packaging

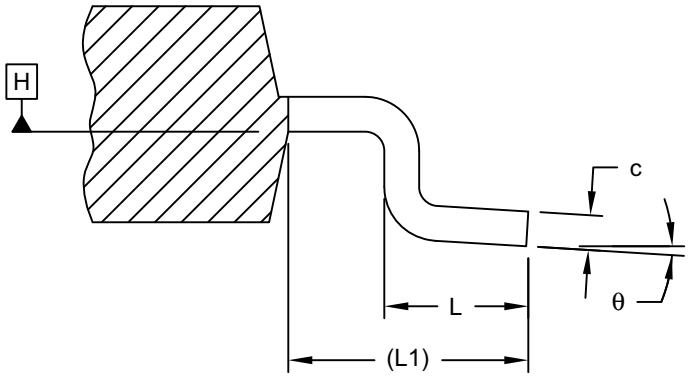

SECTION A-A

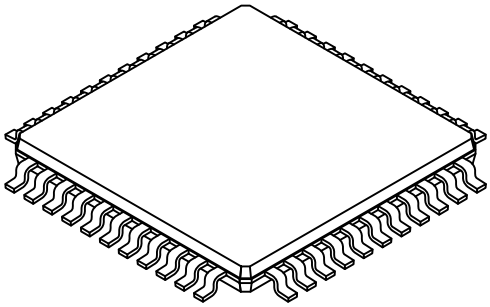

Units		MILLIMETERS		
Dimension Limits		MIN	NOM	MAX
Number of Leads	N	44		
Lead Pitch	e	0.80 BSC		
Overall Height	A	-	-	1.20
Standoff	A1	0.05	-	0.15
Molded Package Thickness	A2	0.95	1.00	1.05
Overall Width	E	12.00 BSC		
Molded Package Width	E1	10.00 BSC		
Overall Length	D	12.00 BSC		
Molded Package Length	D1	10.00 BSC		
Lead Width	b	0.30	0.37	0.45
Lead Thickness	c	0.09	-	0.20
Lead Length	L	0.45	0.60	0.75
Footprint	L1	1.00 REF		
Foot Angle	θ	0°	3.5°	7°

Notes:

1. Pin 1 visual index feature may vary, but must be located within the hatched area.
2. Exact shape of each corner is optional.
3. Dimensioning and tolerancing per ASME Y14.5M

   BSC: Basic Dimension. Theoretically exact value shown without tolerances.

   REF: Reference Dimension, usually without tolerance, for information purposes only.

Microchip Technology Drawing C04-076C Sheet 2 of 2

64-Lead Plastic Thin Quad Flatpack (PT)-10x10x1 mm Body, 2.00 mm Footprint [TQFP]

Note: For the most current package drawings, please see the Microchip Packaging Specification located at http://www.microchip.com/packaging

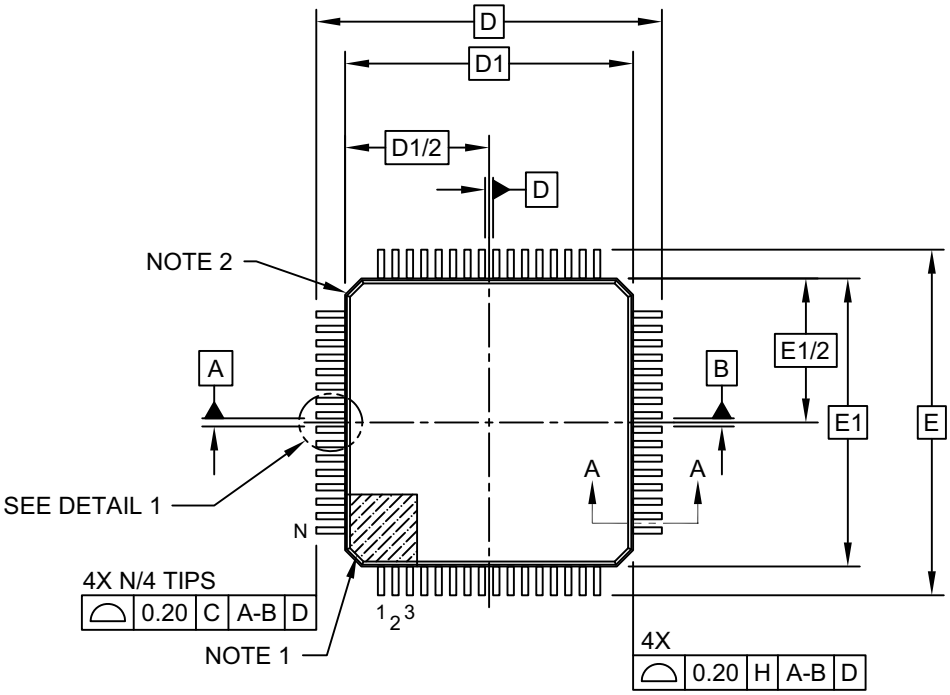

TOP VIEW

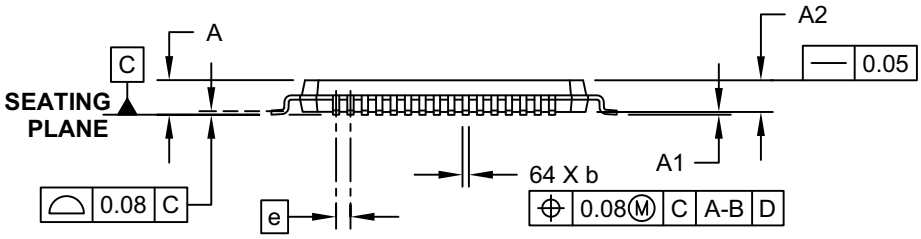

SIDE VIEW

Microchip Technology Drawing C04-085C Sheet 1 of 2

© 2013-2016 Microchip Technology Inc.

NOTES:

© 2013-2016 Microchip Technology Inc.

INDEX

A

Absolute Maximum Ratings 341
AC Characteristics 351
  10-Bit ADC Conversion Requirements 401
  12-Bit ADC Conversion Requirements 399
  12Cx Bus Data Requirements (Master Mode) 388
  ADC Module 395
  ADC Module (10-Bit Mode) 397
  ADC Module (12-Bit Mode) 396
  CANx I/O Requirements 391
  Capacitive Loading Requirements on Output Pins 351
  DMA Module Requirements 401
  External Clock Requirements 352
  High Temperature 408
    ADC Module (10-Bit Mode) 412
    ADC Module (12-Bit Mode) 411
    Internal FRC Accuracy 409
    Internal LPRC Accuracy 409
    PLL Clock 409
  High-Speed PWMx Requirements 361
  I/O Requirements 354
  I2Cx Bus Data Requirements (Slave Mode) 390
  Input Capture x (ICx) Requirements 359
  Internal FRC Accuracy 353
  Internal LPRC Accuracy 353
  Load Conditions 351, 408
  OCx/PWMx Mode Requirements 360
  Op Amp/Comparator x Voltage Reference Settling Time 393
  Output Compare x (OCx) Requirements 360
  PLL Clock 353
  Reset, Watchdog Timer, Oscillator Start-up Timer and Power-up Timer Requirements 356
  SPI1 Master Mode (Full-Duplex, CKE = 0, CKP = x, SMP = 1) Requirements 378
  SPI1 Master Mode (Full-Duplex, CKE = 1, CKP = x, SMP = 1) 376
  SPI1 Master Mode (Half-Duplex, Transmit Only) Requirements 375
  SPI1 Slave Mode (Full-Duplex, CKE = 0, CKP = 0, SMP = 0) Requirements 386
  SPI1 Slave Mode (Full-Duplex, CKE = 0, CKP = 1, SMP = 0) Requirements 384
  SPI1 Slave Mode (Full-Duplex, CKE = 1, CKP = 0, SMP = 0) Requirements 380
  SPI1 Slave Mode (Full-Duplex, CKE = 1, CKP = 1, SMP = 0) Requirements 382
  SPI2 Master Mode (Full-Duplex, CKE = 0, CKP = x, SMP = 1) Requirements 365
  SPI2 Master Mode (Full-Duplex, CKE = 1, CKP = x, SMP = 1) Requirements 364
  SPI2 Master Mode (Half-Duplex, Transmit Only) Requirements 363
  SPI2 Slave Mode (Full-Duplex, CKE = 0, CKP = 0, SMP = 0) Requirements 373
  SPI2 Slave Mode (Full-Duplex, CKE = 0, CKP = 1, SMP = 0) Requirements 371
  SPI2 Slave Mode (Full-Duplex, CKE = 1, CKP = 0, SMP = 0) Requirements 367
  SPI2 Slave Mode (Full-Duplex, CKE = 1, CKP = 1, SMP = 0) Requirements 369
  Timer1 External Clock Requirements 357
  Timer2 and Timer4 (Type B) External Clock Requirements 358
  Timer3 and Timer5 (Type C) External Clock Requirements 358
  UARTx I/O Requirements 391
ADC
  10-Bit Configuration 285
  12-Bit Configuration 285
  Control Registers 289
  Helpful Tips 288
  Key Features 285
Alternate Interrupt Vector Table (AIVT) 95
Analog-to-Digital Converter. *See* ADC.
Assemblers
  MPASM Assembler 338
  MPLAB Assembler, Linker, Librarian 338

B

Bit-Reversed Addressing
  Example 78
  Implementation 77
  Sequence Table (16-Entry) 78
Block Diagrams
  16-Bit Timer1 Module 173
  Accessing Program Memory with Table Instructions 81
  ADCx Conversion Clock Period 287
  ADCx with Connection Options for ANx Pins and Op Amps 286
  Addressing for Table Registers 83
  Arbiter Architecture 73
  CALL Stack Frame 74
  CANx Module 254
  Comparator Voltage Reference Module 314
  Connections for On-Chip Voltage Regulator 324
  CPU Core 22
  CTMU Module 280
  Data Access from Program Space Address Generation 80
  Deadman Timer Module 181
  Digital Filter Interconnect 302
  DMA Controller 111
  dsPIC33EVXXXGM00X/10X Family 13
  EDS Read Address Generation 68
  EDS Write Address Generation 69
  High-Speed PWMx Architectural Overview 201
  High-Speed PWMx Register Interconnection 202
  I2Cx Module 230
  Input Capture x Module 189
  MCLR Pin Connections 18
  Multiplexing Remappable Output for RPn 149
  Op Amp/Comparator x Module 301
  Oscillator Circuit Placement 19
  Oscillator System 123
  Output Compare x Module 193
  Paged Data Memory Space 70
  Peripheral to DMA Controller 109
  PLL Module 124
  Recommended Minimum Connection 18
  Remappable Input for U1RX 146
  Reset System 92