!" # $

% & ' ' ' $ %(

)) * % & ' ' '
$ %

- ,	!
$ -	. %$
$, #	&' /
,	) 0 1 #
$	2$ 3 4 , 5 , , 6 6 ! . 6 , ! .
-	- 5 . 7 8 9 8
4 5	: &
- , #	&' ; / <&' ; * %=
-	>3! , 1
- . 5 , #	
. ! , #	&; * %
7 , <7 7 =	)) 7 ? @@7
8 $	! 8 &) * &0
5	
5	) 0 A$? %@A$ < ! =
	,
- $	@) 3B >-
, 8 -	@) 3B >- <&0 * &0 =
- 6 . 3	C * @) &) : :)

C D E>3 $5 ! C. ! &' > > 9 $ $ @F(4 . 1 ;

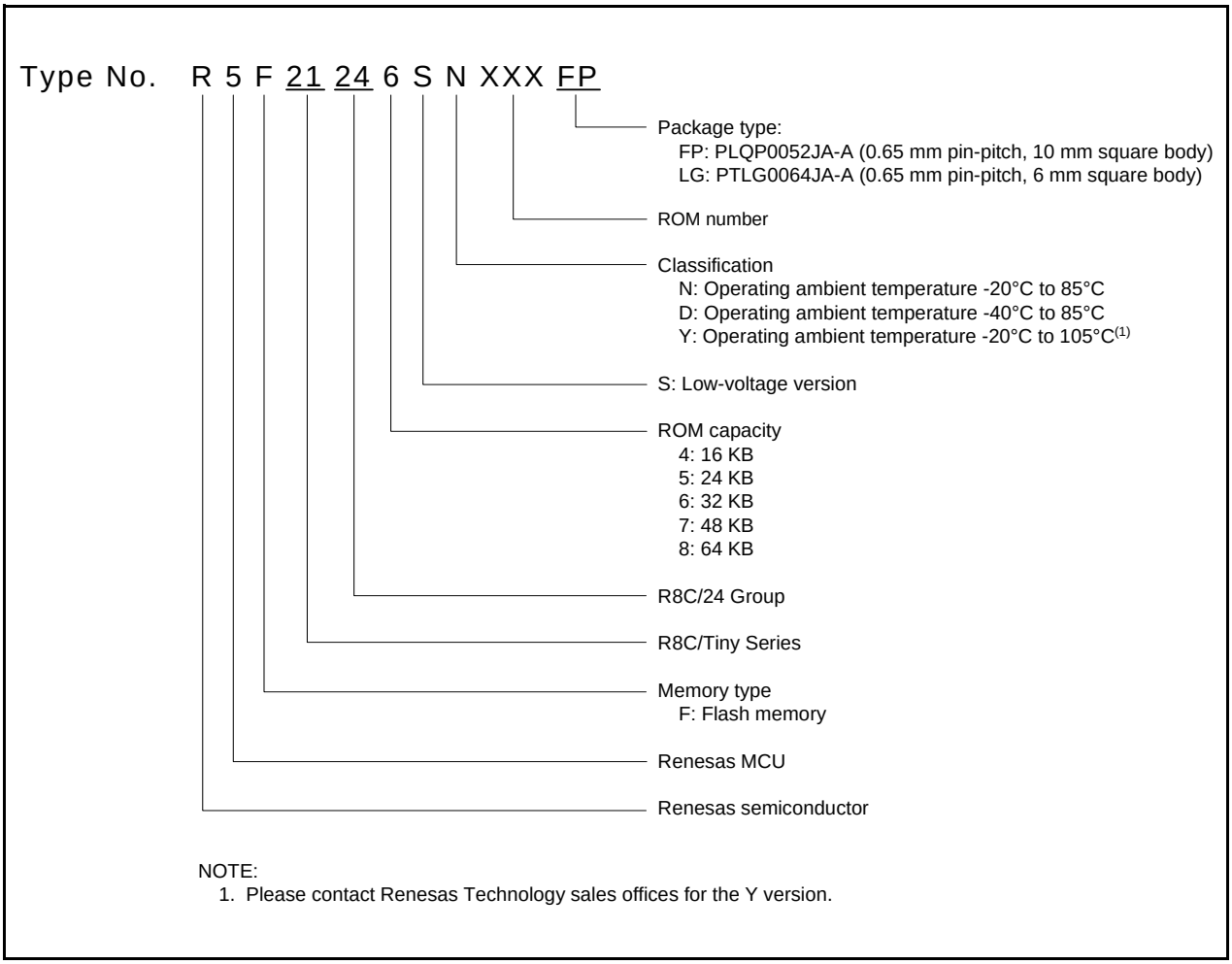

Figure 1.2 Type Number, Memory Size, and Package of R8C/24 Group

1.5 Pin Assignments

Figure 1.4 shows PLQP0052JA-A Package Pin Assignments (Top View). Figure 1.5 shows PTLG0064JA-A Package Pin Assignments.

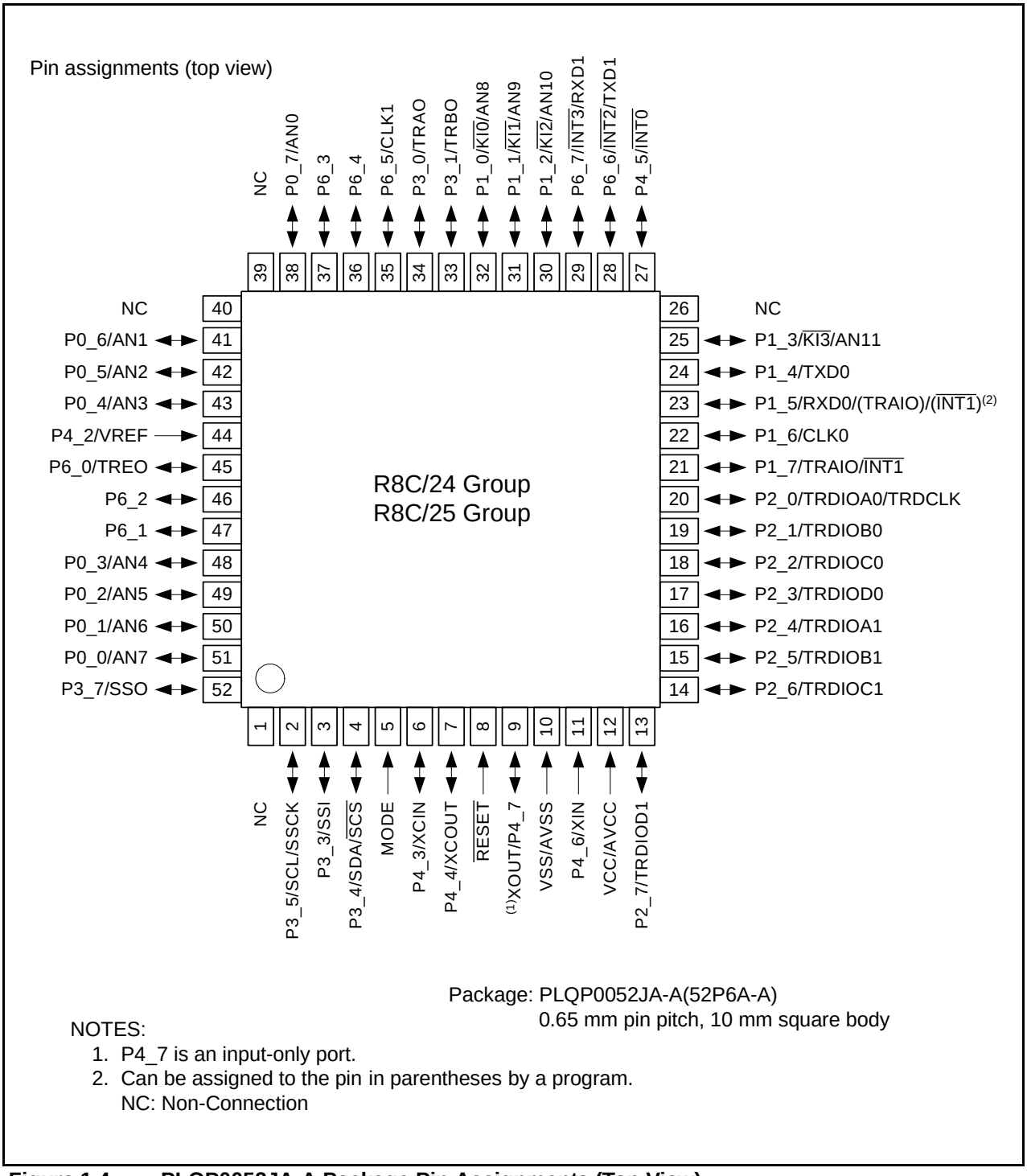

Package: PLQP0052JA-A(52P6A-A)
0.65 mm pin pitch, 10 mm square body

NOTES:
1. P4_7 is an input-only port.
2. Can be assigned to the pin in parentheses by a program.
   NC: Non-Connection

Figure 1.4 PLQP0052JA-A Package Pin Assignments (Top View)

4. Special Function Registers (SFRs)

Table 5.3 A/D Converter Characteristics

Symbol	Parameter		Conditions	Standard			Unit
				Min.	Typ.	Max.	
–	Resolution		V_{ref} = AV_{CC}	–	–	10	Bit
–	Absolute accuracy	10-bit mode	ϕ_{AD} = 10 MHz, V_{ref} = AV_{CC} = 5.0 V	–	–	±3	LSB
		8-bit mode	ϕ_{AD} = 10 MHz, V_{ref} = AV_{CC} = 5.0 V	–	–	±2	LSB
		10-bit mode	ϕ_{AD} = 10 MHz, V_{ref} = AV_{CC} = 3.3 V	–	–	±5	LSB
		8-bit mode	ϕ_{AD} = 10 MHz, V_{ref} = AV_{CC} = 3.3 V	–	–	±2	LSB
		10-bit mode	ϕ_{AD} = 5 MHz, V_{ref} = AV_{CC} = 2.2 V	–	–	±5	LSB
		8-bit mode	ϕ_{AD} = 5 MHz, V_{ref} = AV_{CC} = 2.2 V	–	–	±2	LSB
R_{ladder}	Resistor ladder		V_{ref} = AV_{CC}	10	–	40	kΩ
t_{conv}	Conversion time	10-bit mode	ϕ_{AD} = 10 MHz, V_{ref} = AV_{CC} = 5.0 V	3.3	–	–	µs
		8-bit mode	ϕ_{AD} = 10 MHz, V_{ref} = AV_{CC} = 5.0 V	2.8	–	–	µs
V_{ref}	Reference voltage			2.2	–	AV_{CC}	V
V_{IA}	Analog input voltage(2)			0	–	AV_{CC}	V
–	A/D operating clock frequency	Without sample and hold	V_{ref} = AV_{CC} = 2.7 to 5.5 V	0.25	–	10	MHz
		With sample and hold	V_{ref} = AV_{CC} = 2.7 to 5.5 V	1	–	10	MHz
		Without sample and hold	V_{ref} = AV_{CC} = 2.2 to 5.5 V	0.25	–	5	MHz
		With sample and hold	V_{ref} = AV_{CC} = 2.2 to 5.5 V	1	–	5	MHz

NOTES:
1. AV_{CC} = 2.2 to 5.5 V at T_{opr} = -20 to 85°C (N version) / -40 to 85°C (D version), unless otherwise specified.
2. When the analog input voltage is over the reference voltage, the A/D conversion result will be 3FFh in 10-bit mode and FFh in 8-bit mode.

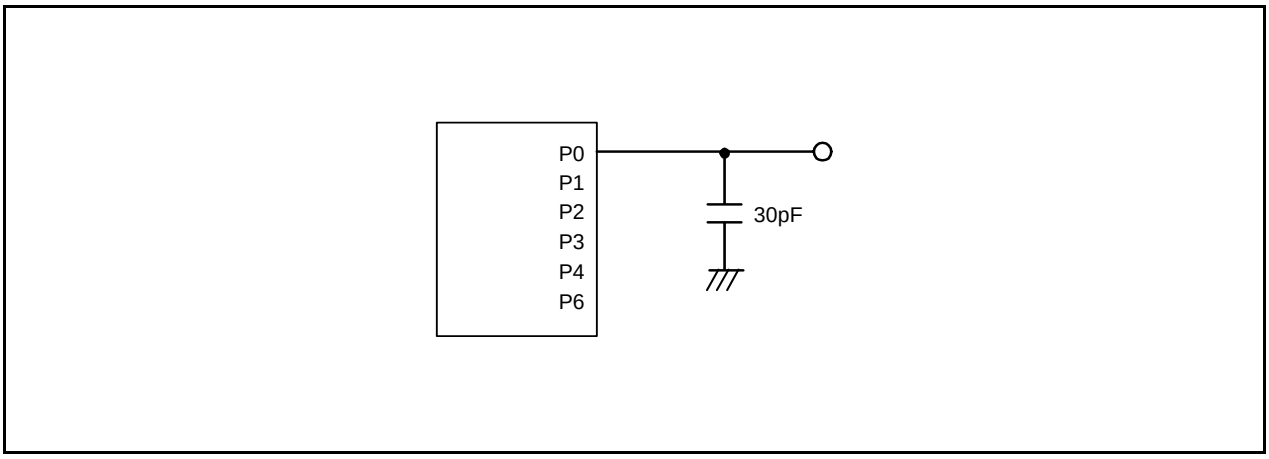

Figure 5.1 Ports P0 to P4, P6 Timing Measurement Circuit

Table 5.5 Flash Memory (Data flash Block A, Block B) Electrical Characteristics(4)

Symbol	Parameter	Conditions	Standard			Unit
			Min.	Typ.	Max.	
–	Program/erase endurance(2)		10,000(3)	–	–	times
–	Byte program time (program/erase endurance ≤ 1,000 times)		–	50	400	µs
–	Byte program time (program/erase endurance > 1,000 times)		–	65	–	µs
–	Block erase time (program/erase endurance ≤ 1,000 times)		–	0.2	9	s
–	Block erase time (program/erase endurance > 1,000 times)		–	0.3	–	s
$t_{d(SR-SUS)}$	Time delay from suspend request until suspend		–	–	97+CPU clock × 6 cycles	µs
–	Interval from erase start/restart until following suspend request		650	–	–	µs
–	Interval from program start/restart until following suspend request		0	–	–	ns
–	Time from suspend until program/erase restart		–	–	3+CPU clock × 4 cycles	µs
–	Program, erase voltage		2.7	–	5.5	V
–	Read voltage		2.2	–	5.5	V
–	Program, erase temperature		-20(8)	–	85	°C
–	Data hold time(9)	Ambient temperature = 55 °C	20	–	–	year

NOTES:
1. V_{CC} = 2.7 to 5.5 V at T_{opr} = -20 to 85°C (N version) / -40 to 85°C (D version), unless otherwise specified.
2. Definition of programming/erasure endurance
   The programming and erasure endurance is defined on a per-block basis.
   If the programming and erasure endurance is n (n = 100 or 10,000), each block can be erased n times. For example, if 1,024 1-byte writes are performed to block A, a 1 Kbyte block, and then the block is erased, the programming/erasure endurance still stands at one.
   However, the same address must not be programmed more than once per erase operation (overwriting prohibited).
3. Endurance to guarantee all electrical characteristics after program and erase. (1 to Min. value can be guaranteed).
4. Standard of block A and block B when program and erase endurance exceeds 1,000 times. Byte program time to 1,000 times is the same as that in program ROM.
5. In a system that executes multiple programming operations, the actual erasure count can be reduced by writing to sequential addresses in turn so that as much of the block as possible is used up before performing an erase operation. For example, when programming groups of 16 bytes, the effective number of rewrites can be minimized by programming up to 128 groups before erasing them all in one operation. It is also advisable to retain data on the erase count of each block and limit the number of erase operations to a certain number.
6. If an error occurs during block erase, attempt to execute the clear status register command, then execute the block erase command at least three times until the erase error does not occur.
7. Customers desiring program/erase failure rate information should contact their Renesas technical support representative.
8. -40°C for D version.
9. The data hold time includes time that the power supply is off or the clock is not supplied.

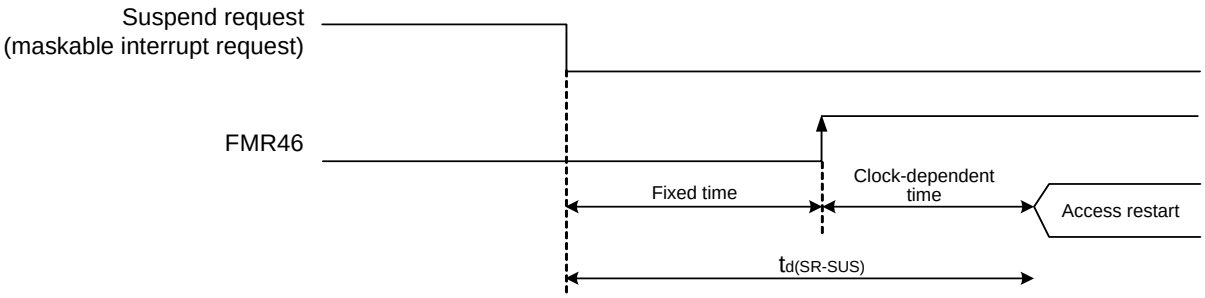

Figure 5.2 Time delay until Suspend

Table 5.6 Voltage Detection 0 Circuit Electrical Characteristics

Symbol	Parameter	Condition	Standard			Unit
			Min.	Typ.	Max.	
V_{det0}	Voltage detection level		2.2	2.3	2.4	V
–	Voltage detection circuit self power consumption	VCA25 = 1, V_{CC} = 5.0 V	–	0.9	–	µA
$t_{d(E-A)}$	Waiting time until voltage detection circuit operation starts(2)		–	–	300	µs
Vccmin	MCU operating voltage minimum value		2.2	–	–	V

NOTES:
1. The measurement condition is V_{CC} = 2.2 to 5.5 V and T_{opr} = -20 to 85°C (N version) / -40 to 85°C (D version).
2. Necessary time until the voltage detection circuit operates when setting to 1 again after setting the VCA25 bit in the VCA2 register to 0.

Table 5.7 Voltage Detection 1 Circuit Electrical Characteristics

Symbol	Parameter	Condition	Standard			Unit
			Min.	Typ.	Max.	
V_{det1}	Voltage detection level		2.70	2.85	3.00	V
–	Voltage monitor 1 interrupt request generation time(2)		–	40	–	µs
–	Voltage detection circuit self power consumption	VCA26 = 1, V_{CC} = 5.0 V	–	0.6	–	µA
$t_{d(E-A)}$	Waiting time until voltage detection circuit operation starts(3)		–	–	100	µs

NOTES:
1. The measurement condition is V_{CC} = 2.2 to 5.5 V and T_{opr} = -20 to 85°C (N version) / -40 to 85°C (D version).
2. Time until the voltage monitor 1 interrupt request is generated after the voltage passes V_{det1}.
3. Necessary time until the voltage detection circuit operates when setting to 1 again after setting the VCA26 bit in the VCA2 register to 0.

Table 5.8 Voltage Detection 2 Circuit Electrical Characteristics

Symbol	Parameter	Condition	Standard			Unit
			Min.	Typ.	Max.	
V_{det2}	Voltage detection level		3.3	3.6	3.9	V
–	Voltage monitor 2 interrupt request generation time(2)		–	40	–	µs
–	Voltage detection circuit self power consumption	VCA27 = 1, V_{CC} = 5.0 V	–	0.6	–	µA
$t_{d(E-A)}$	Waiting time until voltage detection circuit operation starts(3)		–	–	100	µs

NOTES:
1. The measurement condition is V_{CC} = 2.2 to 5.5 V and T_{opr} = -20 to 85°C (N version) / -40 to 85°C (D version).
2. Time until the voltage monitor 2 interrupt request is generated after the voltage passes V_{det2}.
3. Necessary time until the voltage detection circuit operates after setting to 1 again after setting the VCA27 bit in the VCA2 register to 0.

Table 5.13 Timing Requirements of Clock Synchronous Serial I/O with Chip Select(1)

Symbol	Parameter		Conditions	Standard			Unit
				Min.	Typ.	Max.	
t_{SUCYC}	SSCK clock cycle time			4	–	–	t_{CYC}(2)
t_{HI}	SSCK clock “H” width			0.4	–	0.6	t_{SUCYC}
t_{LO}	SSCK clock “L” width			0.4	–	0.6	t_{SUCYC}
t_{RISE}	SSCK clock rising time	Master		–	–	1	t_{CYC}(2)
		Slave		–	–	1	µs
t_{FALL}	SSCK clock falling time	Master		–	–	1	t_{CYC}(2)
		Slave		–	–	1	µs
t_{SU}	SSO, SSI data input setup time			100	–	–	ns
t_H	SSO, SSI data input hold time			1	–	–	t_{CYC}(2)
t_{LEAD}	$\overline{SCS}$ setup time	Slave		1t_{CYC} + 50	–	–	ns
t_{LAG}	$\overline{SCS}$ hold time	Slave		1t_{CYC} + 50	–	–	ns
t_{OD}	SSO, SSI data output delay time			–	–	1	t_{CYC}(2)
t_{SA}	SSI slave access time		2.7 V ≤ V_{CC} ≤ 5.5 V	–	–	1.5t_{CYC} + 100	ns
			2.2 V ≤ V_{CC} < 2.7 V	–	–	1.5t_{CYC} + 200	ns
t_{OR}	SSI slave out open time		2.7 V ≤ V_{CC} ≤ 5.5 V	–	–	1.5t_{CYC} + 100	ns
			2.2 V ≤ V_{CC} < 2.7 V	–	–	1.5t_{CYC} + 200	ns

NOTES:
1. V_{CC} = 2.2 to 5.5 V, V_{SS} = 0 V at T_{opr} = -20 to 85°C (N version) / -40 to 85°C (D version), unless otherwise specified.
2. 1t_{CYC} = 1/f1(s)

Table 5.14 Timing Requirements of I²C bus Interface(1)

Symbol	Parameter	Condition	Standard			Unit
			Min.	Typ.	Max.	
t_{SCL}	SCL input cycle time		$12t_{CYC} + 600$(2)	–	–	ns
t_{SCLH}	SCL input “H” width		$3t_{CYC} + 300$(2)	–	–	ns
t_{SCLL}	SCL input “L” width		$5t_{CYC} + 500$(2)	–	–	ns
t_{sf}	SCL, SDA input fall time		–	–	300	ns
t_{SP}	SCL, SDA input spike pulse rejection time		–	–	$1t_{CYC}$(2)	ns
t_{BUF}	SDA input bus-free time		$5t_{CYC}$(2)	–	–	ns
t_{STAH}	Start condition input hold time		$3t_{CYC}$(2)	–	–	ns
t_{STAS}	Retransmit start condition input setup time		$3t_{CYC}$(2)	–	–	ns
t_{STOP}	Stop condition input setup time		$3t_{CYC}$(2)	–	–	ns
t_{SDAS}	Data input setup time		$1t_{CYC} + 20$(2)	–	–	ns
t_{SDAH}	Data input hold time		0	–	–	ns

NOTES:
1. V_{CC} = 2.2 to 5.5 V, V_{SS} = 0 V and T_{opr} = -20 to 85°C (N version) / -40 to 85°C (D version), unless otherwise specified.
2. $1t_{CYC} = 1/f1(s)$

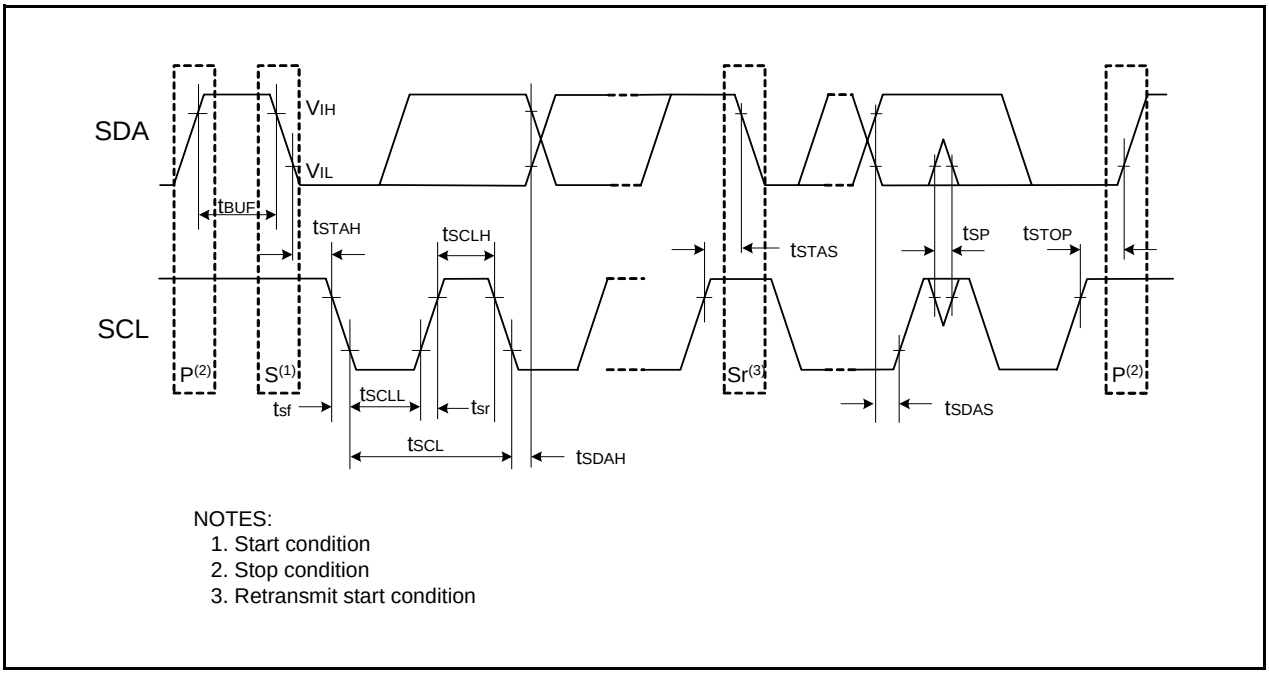

Figure 5.7 I/O Timing of I²C bus Interface

Table 5.15 Electrical Characteristics (1) [Vcc = 5 V]

Symbol	Parameter		Condition		Standard			Unit
					Min.	Typ.	Max.	
V_{OH}	Output “H” voltage	Except P2_0 to P2_7, XOUT	I_{OH} = -5 mA		V_{CC} – 2.0	–	V_{CC}	V
			I_{OH} = -200 µA		V_{CC} – 0.5	–	V_{CC}	V
		P2_0 to P2_7	Drive capacity HIGH	I_{OH} = -20 mA	V_{CC} – 2.0	–	V_{CC}	V
			Drive capacity LOW	I_{OH} = -5 mA	V_{CC} – 2.0	–	V_{CC}	V
		XOUT	Drive capacity HIGH	I_{OH} = -1 mA	V_{CC} – 2.0	–	V_{CC}	V
			Drive capacity LOW	I_{OH} = -500 µA	V_{CC} – 2.0	–	V_{CC}	V
V_{OL}	Output “L” voltage	Except P2_0 to P2_7, XOUT	I_{OL} = 5 mA		–	–	2.0	V
			I_{OL} = 200 µA		–	–	0.45	V
		P2_0 to P2_7	Drive capacity HIGH	I_{OL} = 20 mA	–	–	2.0	V
			Drive capacity LOW	I_{OL} = 5 mA	–	–	2.0	V
		XOUT	Drive capacity HIGH	I_{OL} = 1 mA	–	–	2.0	V
			Drive capacity LOW	I_{OL} = 500 µA	–	–	2.0	V
V_{T+}-V_{T-}	Hysteresis	$\overline{INT0}$, $\overline{INT1}$, $\overline{INT2}$, $\overline{INT3}$, KI0, KI1, KI2, $\overline{KI3}$, TRAIO, RXD0, RXD1, CLK0, CLK1, SSI, SCL, SDA, SSO			0.1	0.5	–	V
		$\overline{RESET}$			0.1	1.0	–	V
I_{IH}	Input “H” current		VI = 5 V, Vcc = 5V		–	–	5.0	µA
I_{IL}	Input “L” current		VI = 0 V, Vcc = 5V		–	–	-5.0	µA
R_{PULLUP}	Pull-up resistance		VI = 0 V, Vcc = 5V		30	50	167	kΩ
R_{fXIN}	Feedback resistance	XIN			–	1.0	–	MΩ
R_{fXCIN}	Feedback resistance	XCIN			–	18	–	MΩ
V_{RAM}	RAM hold voltage		During stop mode		1.8	–	–	V

NOTE:
1. V_{CC} = 4.2 to 5.5 V at T_{opr} = -20 to 85°C (N version) / -40 to 85°C (D version), f(XIN) = 20 MHz, unless otherwise specified.

Timing Requirements
(Unless Otherwise Specified: Vcc = 5 V, Vss = 0 V at Topr = 25°C) [Vcc = 5 V]

Table 5.18 XIN Input, XCIN Input

Symbol	Parameter	Standard		Unit
		Min.	Max.	
$t_{c(XIN)}$	XIN input cycle time	50	–	ns
$t_{WH(XIN)}$	XIN input “H” width	25	–	ns
$t_{WL(XIN)}$	XIN input “L” width	25	–	ns
$t_{c(XCIN)}$	XCIN input cycle time	14	–	µs
$t_{WH(XCIN)}$	XCIN input “H” width	7	–	µs
$t_{WL(XCIN)}$	XCIN input “L” width	7	–	µs

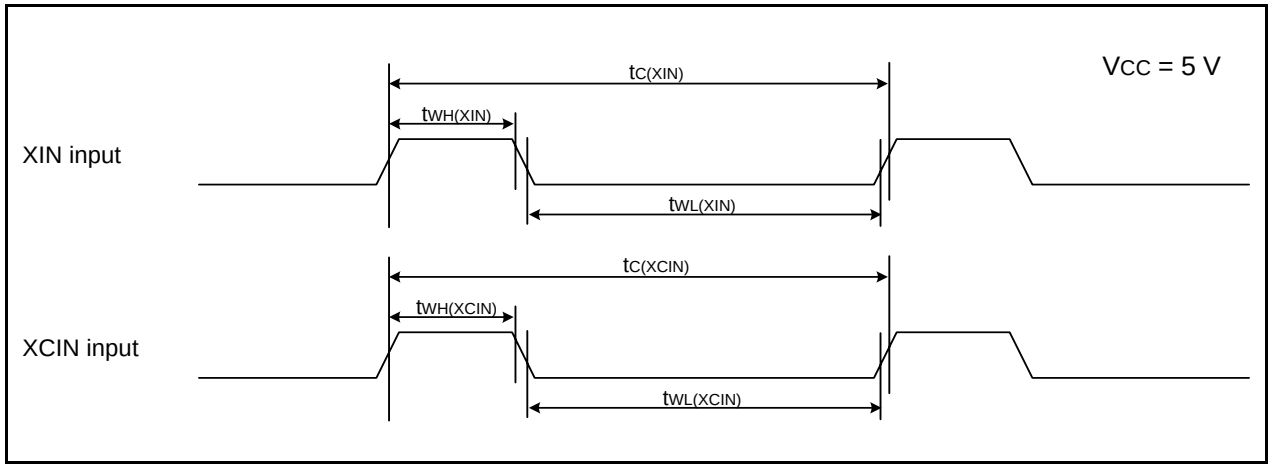

Figure 5.8 XIN Input and XCIN Input Timing Diagram when Vcc = 5 V

Table 5.19 TRAIO Input

Symbol	Parameter	Standard		Unit
		Min.	Max.	
$t_{c(TRAIO)}$	TRAIO input cycle time	100	–	ns
$t_{WH(TRAIO)}$	TRAIO input “H” width	40	–	ns
$t_{WL(TRAIO)}$	TRAIO input “L” width	40	–	ns

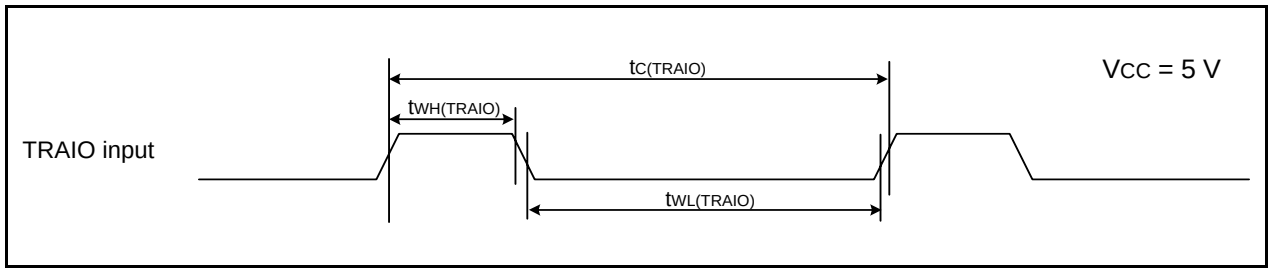

Figure 5.9 TRAIO Input Timing Diagram when Vcc = 5 V

Table 5.23 Electrical Characteristics (4) [Vcc = 3 V]
(Topr = -20 to 85°C (N version) / -40 to 85°C (D version), unless otherwise specified.)

Symbol	Parameter	Condition		Standard			Unit
				Min.	Typ.	Max.	
ICC	Power supply current (VCC = 2.7 to 3.3 V) Single-chip mode, output pins are open, other pins are VSS	High-speed clock mode	XIN = 10 MHz (square wave) High-speed on-chip oscillator off Low-speed on-chip oscillator on = 125 kHz No division	–	6	–	mA
			XIN = 10 MHz (square wave) High-speed on-chip oscillator off Low-speed on-chip oscillator on = 125 kHz Divide-by-8	–	2	–	mA
		High-speed on-chip oscillator mode	XIN clock off High-speed on-chip oscillator on fOCO = 10 MHz Low-speed on-chip oscillator on = 125 kHz No division	–	5	9	mA
			XIN clock off High-speed on-chip oscillator on fOCO = 10 MHz Low-speed on-chip oscillator on = 125 kHz Divide-by-8	–	2	–	mA
		Low-speed on-chip oscillator mode	XIN clock off High-speed on-chip oscillator off Low-speed on-chip oscillator on = 125 kHz Divide-by-8, FMR47 = 1	–	130	300	µA
		Low-speed clock mode	XIN clock off High-speed on-chip oscillator off Low-speed on-chip oscillator off XCIN clock oscillator on = 32 kHz FMR47 = 1	–	130	300	µA
			XIN clock off High-speed on-chip oscillator off Low-speed on-chip oscillator off XCIN clock oscillator on = 32 kHz Program operation on RAM Flash memory off, FMSTP = 1	–	30	–	µA
		Wait mode	XIN clock off High-speed on-chip oscillator off Low-speed on-chip oscillator on = 125 kHz While a WAIT instruction is executed Peripheral clock operation VCA27 = VCA26 = VCA25 = 0 VCA20 = 1	–	25	70	µA
			XIN clock off High-speed on-chip oscillator off Low-speed on-chip oscillator on = 125 kHz While a WAIT instruction is executed Peripheral clock off VCA27 = VCA26 = VCA25 = 0 VCA20 = 1	–	23	55	µA
			XIN clock off High-speed on-chip oscillator off Low-speed on-chip oscillator off XCIN clock oscillator on = 32 kHz (high drive) While a WAIT instruction is executed VCA27 = VCA26 = VCA25 = 0 VCA20 = 1	–	3.8	–	µA
			XIN clock off High-speed on-chip oscillator off Low-speed on-chip oscillator off XCIN clock oscillator on = 32 kHz (low drive) While a WAIT instruction is executed VCA27 = VCA26 = VCA25 = 0 VCA20 = 1	–	2.0	–	µA
		Increase during A/D converter operation	Without sample & hold	–	0.9	–	mA
			With sample & hold	–	0.5	–	mA
		Stop mode	XIN clock off, Topr = 25°C High-speed on-chip oscillator off Low-speed on-chip oscillator off CM10 = 1 Peripheral clock off VCA27 = VCA26 = VCA25 = 0	–	0.7	3.0	µA
			XIN clock off, Topr = 85°C High-speed on-chip oscillator off Low-speed on-chip oscillator off CM10 = 1 Peripheral clock off VCA27 = VCA26 = VCA25 = 0	–	1.1	–	µA

Table 5.28 Electrical Characteristics (5) [Vcc = 2.2 V]

Symbol	Parameter		Condition		Standard			Unit
					Min.	Typ.	Max.	
V_{OH}	Output “H” voltage	Except P2_0 to P2_7, XOUT	I_{OH} = -1 mA		Vcc - 0.5	–	Vcc	V
		P2_0 to P2_7	Drive capacity HIGH	I_{OH} = -2 mA	Vcc - 0.5	–	Vcc	V
			Drive capacity LOW	I_{OH} = -1 mA	Vcc - 0.5	–	Vcc	V
		XOUT	Drive capacity HIGH	I_{OH} = -0.1 mA	Vcc - 0.5	–	Vcc	V
			Drive capacity LOW	I_{OH} = -50 µA	Vcc - 0.5	–	Vcc	V
V_{OL}	Output “L” voltage	Except P2_0 to P2_7, XOUT	I_{OL} = 1 mA		–	–	0.5	V
		P2_0 to P2_7	Drive capacity HIGH	I_{OL} = 2 mA	–	–	0.5	V
			Drive capacity LOW	I_{OL} = 1 mA	–	–	0.5	V
		XOUT	Drive capacity HIGH	I_{OL} = 0.1 mA	–	–	0.5	V
			Drive capacity LOW	I_{OL} = 50 µA	–	–	0.5	V
V_{T+}-V_{T-}	Hysteresis	$\overline{INT0}$, $\overline{INT1}$, $\overline{INT2}$, $\overline{INT3}$, $\overline{KI0}$, $\overline{KI1}$, $\overline{KI2}$, $\overline{KI3}$, TRAIO, RXD0, RXD1, CLK0, CLK1, SSI, SCL, SDA, SSO			0.05	0.3	–	V
		$\overline{RESET}$			0.05	0.15	–	V
I_{IH}	Input “H” current		VI = 2.2 V		–	–	4.0	µA
I_{IL}	Input “L” current		VI = 0 V		–	–	-4.0	µA
R_{PULLUP}	Pull-up resistance		VI = 0 V		100	200	600	kΩ
R_{fXIN}	Feedback resistance	XIN			–	5	–	MΩ
R_{fXCIN}	Feedback resistance	XCIN			–	35	–	MΩ
V_{RAM}	RAM hold voltage		During stop mode		1.8	–	–	V

NOTE:
1. Vcc = 2.2 V at T_{opr} = -20 to 85°C (N version) / -40 to 85°C (D version), f(XIN) = 5 MHz, unless otherwise specified.

Table 5.29 Electrical Characteristics (6) [Vcc = 2.2 V]
(Topr = -20 to 85°C (N version) / -40 to 85°C (D version), unless otherwise specified.)

Symbol	Parameter	Condition		Standard			Unit
				Min.	Typ.	Max.	
ICC	Power supply current (VCC = 2.2 to 2.7 V) Single-chip mode, output pins are open, other pins are VSS	High-speed clock mode	XIN = 5 MHz (square wave) High-speed on-chip oscillator off Low-speed on-chip oscillator on = 125 kHz No division	–	3.5	–	mA
			XIN = 5 MHz (square wave) High-speed on-chip oscillator off Low-speed on-chip oscillator on = 125 kHz Divide-by-8	–	1.5	–	mA
		High-speed on-chip oscillator mode	XIN clock off High-speed on-chip oscillator on fOCO = 5 MHz Low-speed on-chip oscillator on = 125 kHz No division	–	3.5	–	mA
			XIN clock off High-speed on-chip oscillator on fOCO = 5 MHz Low-speed on-chip oscillator on = 125 kHz Divide-by-8	–	1.5	–	mA
		Low-speed on-chip oscillator mode	XIN clock off High-speed on-chip oscillator off Low-speed on-chip oscillator on = 125 kHz Divide-by-8, FMR47 = 1	–	100	230	µA
		Low-speed clock mode	XIN clock off High-speed on-chip oscillator off Low-speed on-chip oscillator off XCIN clock oscillator on = 32 kHz FMR47 = 1	–	100	230	µA
			XIN clock off High-speed on-chip oscillator off Low-speed on-chip oscillator off XCIN clock oscillator on = 32 kHz Program operation on RAM Flash memory off, FMSTP = 1	–	25	–	µA
		Wait mode	XIN clock off High-speed on-chip oscillator off Low-speed on-chip oscillator on = 125 kHz While a WAIT instruction is executed Peripheral clock operation VCA27 = VCA26 = VCA25 = 0 VCA20 = 1	–	22	60	µA
			XIN clock off High-speed on-chip oscillator off Low-speed on-chip oscillator on = 125 kHz While a WAIT instruction is executed Peripheral clock off VCA27 = VCA26 = VCA25 = 0 VCA20 = 1	–	20	55	µA
			XIN clock off High-speed on-chip oscillator off Low-speed on-chip oscillator off XCIN clock oscillator on = 32 kHz (high drive) While a WAIT instruction is executed VCA27 = VCA26 = VCA25 = 0 VCA20 = 1	–	3.0	–	µA
			XIN clock off High-speed on-chip oscillator off Low-speed on-chip oscillator off XCIN clock oscillator on = 32 kHz (low drive) While a WAIT instruction is executed VCA27 = VCA26 = VCA25 = 0 VCA20 = 1	–	1.8	–	µA
		Increase during A/D converter operation	Without sample & hold	–	0.4	–	mA
			With sample & hold	–	0.3	–	mA
		Stop mode	XIN clock off, Topr = 25°C High-speed on-chip oscillator off Low-speed on-chip oscillator off CM10 = 1 Peripheral clock off VCA27 = VCA26 = VCA25 = 0	–	0.7	3.0	µA
			XIN clock off, Topr = 85°C High-speed on-chip oscillator off Low-speed on-chip oscillator off CM10 = 1 Peripheral clock off VCA27 = VCA26 = VCA25 = 0	–	1.1	–	µA

Timing requirements
(Unless Otherwise Specified: V_{CC} = 2.2 V, V_{SS} = 0 V at Topr = 25°C) [V_{CC} = 2.2 V]

Table 5.30 XIN Input, XCIN Input

Symbol	Parameter	Standard		Unit
		Min.	Max.	
$t_{c(XIN)}$	XIN input cycle time	200	–	ns
$t_{WH(XIN)}$	XIN input “H” width	90	–	ns
$t_{WL(XIN)}$	XIN input “L” width	90	–	ns
$t_{c(XCIN)}$	XCIN input cycle time	14	–	µs
$t_{WH(XCIN)}$	XCIN input “H” width	7	–	µs
$t_{WL(XCIN)}$	XCIN input “L” width	7	–	µs

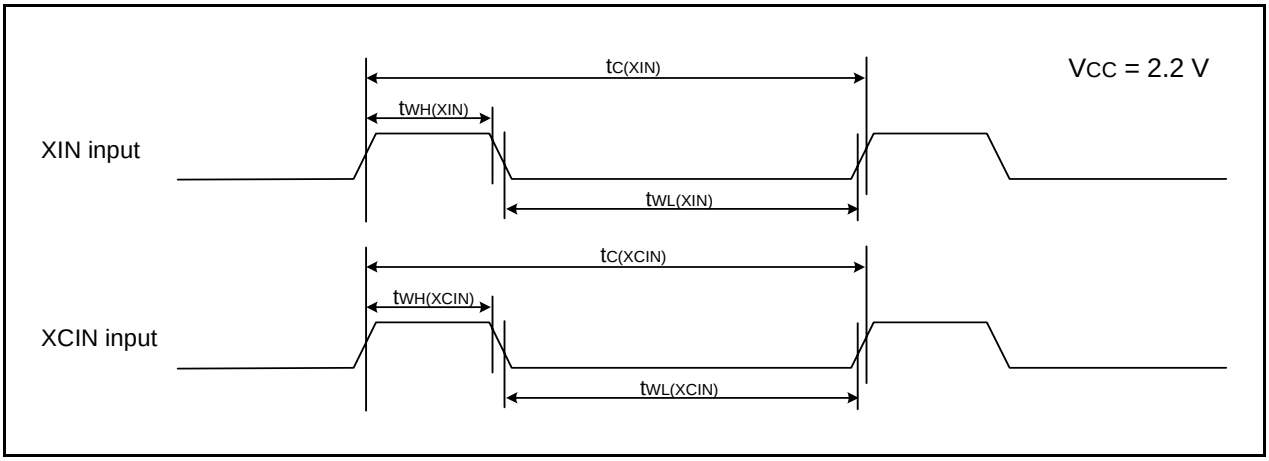

Figure 5.16 XIN Input and XCIN Input Timing Diagram when V_{CC} = 2.2 V

Table 5.31 TRAIO Input

Symbol	Parameter	Standard		Unit
		Min.	Max.	
$t_{c(TRAIO)}$	TRAIO input cycle time	500	–	ns
$t_{WH(TRAIO)}$	TRAIO input “H” width	200	–	ns
$t_{WL(TRAIO)}$	TRAIO input “L” width	200	–	ns

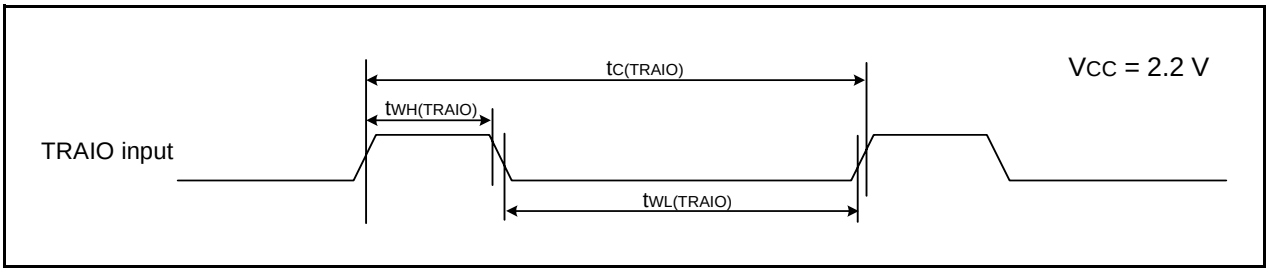

Figure 5.17 TRAIO Input Timing Diagram when V_{CC} = 2.2 V

Table 5.32 Serial Interface

Symbol	Parameter	Standard		Unit
		Min.	Max.	
$t_{c(CK)}$	CLKi input cycle time	800	–	ns
$t_{W(CKH)}$	CLKi input “H” width	400	–	ns
$t_{W(CKL)}$	CLKi input “L” width	400	–	ns
$t_{d(C-Q)}$	TXDi output delay time	–	200	ns
$t_{h(C-Q)}$	TXDi hold time	0	–	ns
$t_{su(D-C)}$	RXDi input setup time	150	–	ns
$t_{h(C-D)}$	RXDi input hold time	90	–	ns

i = 0 or 1

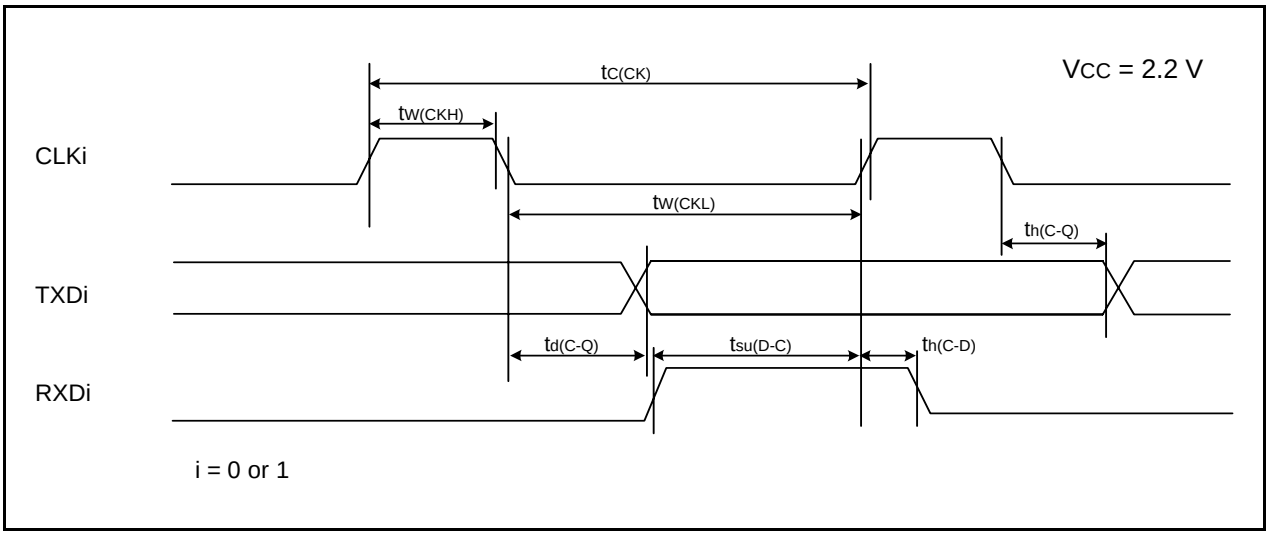

Figure 5.18 Serial Interface Timing Diagram when VCC = 2.2 V

Table 5.33 External Interrupt $\overline{INTi}$ (i = 0 to 3) Input

Symbol	Parameter	Standard		Unit
		Min.	Max.	
$t_{W(INH)}$	$\overline{INT0}$ input “H” width	1000(1)	–	ns
$t_{W(INL)}$	$\overline{INT0}$ input “L” width	1000(2)	–	ns

NOTES:
1. When selecting the digital filter by the $\overline{INTi}$ input filter select bit, use an $\overline{INTi}$ input HIGH width of either (1/digital filter clock frequency × 3) or the minimum value of standard, whichever is greater.
2. When selecting the digital filter by the $\overline{INTi}$ input filter select bit, use an $\overline{INTi}$ input LOW width of either (1/digital filter clock frequency × 3) or the minimum value of standard, whichever is greater.

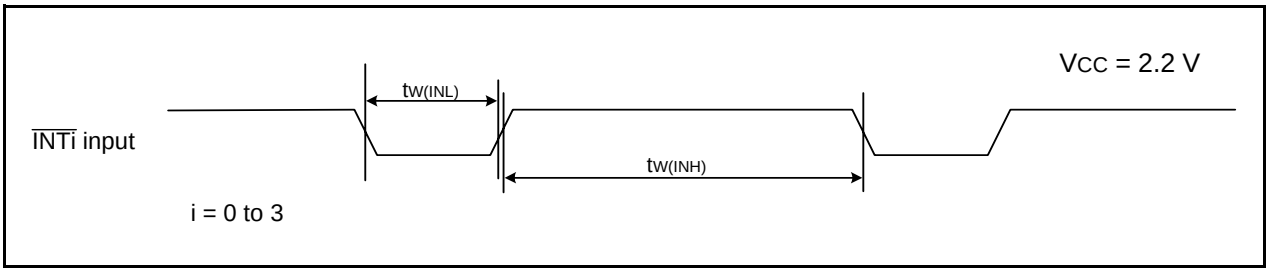

Figure 5.19 External Interrupt $\overline{INTi}$ Input Timing Diagram when VCC = 2.2 V

REVISION HISTORY	R8C/24 Group, R8C/25 Group Datasheet

Rev.	Date	Description	
		Page	Summary
0.01	Sep 17, 2004	-	First Edition issued
0.02	Dec 10, 2004	All pages	Part Number revised. R8C/26 → R8C/24, R8C/27 → R8C/25
		2, 3	Table 1.1 R8C/24 Group Performance, Table 1.2 R8C/25 Group Performance - Serial Interface: I^2C Bus Interface and Chip-select clock synchronous (SSU) added. - LIN Module added. - Interrupt: Internal factors revised; 10 → 11 - Note on Operating Ambient Temperature added.
		4	Figure 1.1 Block Diagram - LIN Module added. - Chip-select clock synchronous (SSU) is added to I^2C Bus Interface.
		5, 6	Table 1.3 Product Information of R8C/24 Group, Table 1.4 Product Information of R8C/25 Group Date and Development state revised.
		7	Figure 1.4 Pin Assignment P3_5/SCL → P3_5/SCL/SSCK, P3_3 → P3_3/SSI, P3_4/SDA → P3_4/SDA/SCS, P3_7 → P3_7/SSO, VSS/AVSS → VSS, XIN/P4_6 → P4_6/XIN, VCC/AVSS → VCC 12pin P1_7/TRAIO/INT1 to 22pin P1_0/KI0/AN8 → 20pin P1_7/TRAIO/INT1 to 30pin P1_0/KI0/AN8
		8	Table 1.5 Pin Description - Analog Power Supply Input eliminated. - SSU added.
		9	Table 1.6 Pin Name Information by Pin Number added.
		15	Table 4.1 SFR Information (1) - 0031h: Voltage Detection Register 1 → Voltage Detection A Register 1 - 0032h: Voltage Detection Register 1 → Voltage Detection A Register 2 01000001b → 00100001b (Note 4) - 0036h: "(3), 01000001b (4)" eliminated. - 0038h: Voltage Monitor 0 Control Register (2), VW0C, 00001000b (3), 01000001b (4) added.
		16	Table 4.2 SFR Information (2) - 0048h: Timer RD0 Interrupt Control Register, RD0IC, XXXXX000b added. - 0049h: Timer RD Interrupt Control Register, RDIC → Timer RD1 Interrupt Control Register, RD1IC - 004Fh: IIC Interrupt Control Register, IIC → IIC/SSU Interrupt Control Register, IIC2IC
		19	Table 4.5 SFR Information (3) - 0106h: LIN Control Register, LINCR, 00h added. -0107h: LIN Status Register, LINST, 00h added.

REVISION HISTORY	R8C/24 Group, R8C/25 Group Datasheet

Rev.	Date	Description	
		Page	Summary
0.10	Feb 24, 2005	1 to 3 5, 6	Pin type changed: 48-pin(under consideration) → 52-pin.
		5 to 7	Package type revised: 48-pin LQFP(under consideration) → PLQP0052JA-A
		8	Table 1.5 TCLK added, VREF revised.
		9	Table 1.6 revised.
		13, 14	Figures 3.1 and 3.2 part number revised.
		15	Tabel 4.1 revised: - 000Fh: 000XXXXXb → 00011111b - 0023h: FR0 → FRA0 - 0024h: FR1 → FRA1 - 0025h: FR2 → FRA2 - 0031h: Voltage Detection A Register 1, VC1 → Voltage Detection Register 1, VCA1 - 0032h: Voltage Detection A Register 2, VC2 → Voltage Detection Register 2, VCA2
		17	Tabel 4.3 Register name and the value after reset at 00B8h to 00BFh revised; NOTE2 added.
		19	Tabel 4.5 revised: - 0107h: LINSR → LINST - 0137h to 013Fh: Register symbol revised
		20	Tabel 4.6 revised: - 0140h to 015Fh: Register symbol revised - 0158h, 0159h: Timer RD General Register → Timer RD General Register A1
0.20	Mar 8, 2005	2, 3 8	Tables 1.1, 1.2 and 1.5 revised: “main clock” → “XIN clock”; “sub clock” → “XCIN clock”
		15	- 0023h to 0025h: 40MHz On-Chip Oscillator Control Register → High-Speed On-Chip Oscillator Control Register
0.30	Sep 01, 2005	2, 3	Table 1.1 R8C/24 Group Performance, Table 1.2 R8C/25 Group Performance • Serial Interface revised: - Serial Interface: 2 channels Clock synchronous serial I/O, UART - Clock Synchronous Serial Interface: 1 channel I^2C bus Interface(1), Clock synchronous serial I/O with chip select
		4	Figure 1.1 Block Diagram • UART or Clock Synchronous Serial Interface: “(8 bits × 1 channel)” → “(8 bits × 2 channels)” revised • UART (8 bits × 1 channel) deleted
		5, 6	Table 1.3 Product Information of R8C/24 Group, Table 1.4 Product Information of R8C/25 Group “Flash Memory Version” → “N Version” revised

REVISION HISTORY	R8C/24 Group, R8C/25 Group Datasheet

Rev.	Date	Description	
		Page	Summary
2.00	Jul 14, 2006	all pages	“PTLG0064JA-A (64F0G)” package added
		1	1. Overview; “... or a 64-pin molded-plastic FLGA.“ added
		2, 3	Table 1.1 Functions and Specifications for R8C/24 Group, Table 1.2 Functions and Specifications for R8C/25 Group; Package: “64-pin molded-plastic FLGA” added
		5	Table 1.3 Product Information for R8C/24 Group, Figure 1.2 Type Number, Memory Size, and Package of R8C/24 Group revised
		6	Table 1.4 Product Information for R8C/25 Group, Figure 1.3 Type Number, Memory Size, and Package of R8C/25 Group revised
		7	Figure 1.4 PLQP0052JA-A Package Pin Assignments (Top View); NOTE3 revised
		8	Figure 1.5 PTLG0064JA-A Package Pin Assignments added
		14	Figure 3.1 Memory Map of R8C/24 Group revised
		15	Figure 3.2 Memory Map of R8C/25 Group revised
		23	Table 5.1 Absolute Maximum Ratings; NOTE1 added
		47	Package Dimensions; “PTLG0064JA-A (64F0G)” added
3.00	Feb 29, 2008	all pages	Y version added Factory programming product added
		2, 3	Table 1.1, Table 1.2 Clock; “Real-time clock (timer RE)” added
		5, 7	Table 1.3, Table 1.4 revised
		6, 8	Figure 1.2, Figure 1.3; ROM number “XXX” added
		16, 17	Figure 3.1, Figure 3.2; “Expanded area” deleted
		18	Table 4.1 revised
		26	Table 5.2 NOTE2 revised
		32	Table 5.10; revised, NOTE4 added Table 5.11; Oscillation stability time: Condition “V_{CC} = 5.0 V, Topr = 25°C” deleted
		38	Table 5.15; I_{IH}, I_{IL}, R_{PULLUP} Condition: “Vcc = 5V” added
		39	Table 5.16; Condition: High-speed on-chip oscillator mode revised
		40	Table 5.17 added
		41	Figure 5.8 revised
		43	Table 5.22; I_{IH}, I_{IL}, R_{PULLUP} Condition: “Vcc = 3V” added
		44	Table 5.23; Condition “Increase during A/D converter operation” added
		45	Figure 5.12 revised
		48	Table 5.29; Condition “Increase during A/D converter operation” added
		49	Figure 5.16 revised