Lattice Semiconductor Corporation - LCMXO2-640HC-4SG48C Datasheet

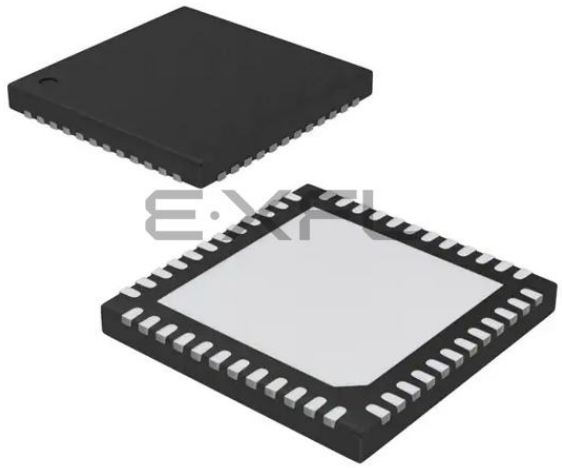

Welcome to E-XFL.COM

Understanding Embedded - FPGAs (Field Programmable Gate Array)

Embedded - FPGAs, or Field Programmable Gate Arrays, are advanced integrated circuits that offer unparalleled flexibility and performance for digital systems. Unlike traditional fixed-function logic devices, FPGAs can be programmed and reprogrammed to execute a wide array of logical operations, enabling customized functionality tailored to specific applications. This reprogrammability allows developers to iterate designs quickly and implement complex functions without the need for custom hardware.

Applications of Embedded - FPGAs

The versatility of Embedded - FPGAs makes them indispensable in numerous fields. In telecommunications.

Details	
Product Status	Active
Number of LABs/CLBs	80
Number of Logic Elements/Cells	640
Total RAM Bits	18432
Number of I/O	40
Number of Gates	-
Voltage - Supply	2.375V ~ 3.465V
Mounting Type	Surface Mount
Operating Temperature	0°C ~ 85°C (TJ)
Package / Case	48-VFQFN Exposed Pad
Supplier Device Package	48-QFN (7x7)
Purchase URL	https://www.e-xfl.com/product-detail/lattice-semiconductor/lcmxo2-640hc-4sg48c

Figure 2-4. Slice Diagram

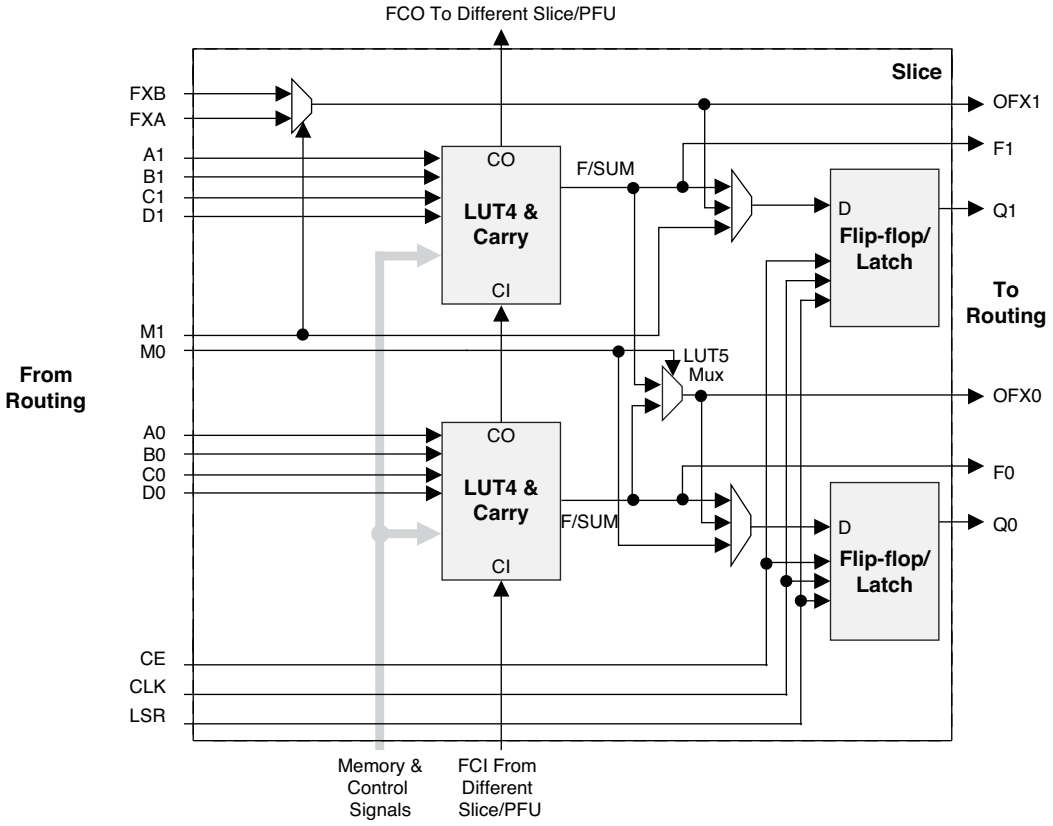

For Slices 0 and 1, memory control signals are generated from Slice 2 as follows:

- WCK is CLK
- WRE is from LSR
- DI[3:2] for Slice 1 and DI[1:0] for Slice 0 data from Slice 2
- WAD [A:D] is a 4-bit address from slice 2 LUT input

Table 2-2. Slice Signal Descriptions

Function	Type	Signal Names	Description
Input	Data signal	A0, B0, C0, D0	Inputs to LUT4
Input	Data signal	A1, B1, C1, D1	Inputs to LUT4
Input	Multi-purpose	M0/M1	Multi-purpose input
Input	Control signal	CE	Clock enable
Input	Control signal	LSR	Local set/reset
Input	Control signal	CLK	System clock
Input	Inter-PFU signal	FCIN	Fast carry in[1]
Output	Data signals	F0, F1	LUT4 output register bypass signals
Output	Data signals	Q0, Q1	Register outputs
Output	Data signals	OFX0	Output of a LUT5 MUX
Output	Data signals	OFX1	Output of a LUT6, LUT7, LUT8[2] MUX depending on the slice
Output	Inter-PFU signal	FCO	Fast carry out[1]

1. See Figure 2-3 for connection details.
2. Requires two PFUs.

The EBR memory supports three forms of write behavior for single or dual port operation:

1. **Normal** – Data on the output appears only during the read cycle. During a write cycle, the data (at the current address) does not appear on the output. This mode is supported for all data widths.

2. **Write Through** – A copy of the input data appears at the output of the same port. This mode is supported for all data widths.

3. **Read-Before-Write** – When new data is being written, the old contents of the address appears at the output.

FIFO Configuration

The FIFO has a write port with data-in, CEW, WE and CLKW signals. There is a separate read port with data-out, RCE, RE and CLKR signals. The FIFO internally generates Almost Full, Full, Almost Empty and Empty Flags. The Full and Almost Full flags are registered with CLKW. The Empty and Almost Empty flags are registered with CLKR. Table 2-7 shows the range of programming values for these flags.

Table 2-7. Programmable FIFO Flag Ranges

Flag Name	Programming Range
Full (FF)	1 to max (up to 2^N-1)
Almost Full (AF)	1 to Full-1
Almost Empty (AE)	1 to Full-1
Empty (EF)	0

N = Address bit width.

The FIFO state machine supports two types of reset signals: RST and RPRST. The RST signal is a global reset that clears the contents of the FIFO by resetting the read/write pointer and puts the FIFO flags in their initial reset state. The RPRST signal is used to reset the read pointer. The purpose of this reset is to retransmit the data that is in the FIFO. In these applications it is important to keep careful track of when a packet is written into or read from the FIFO.

Memory Core Reset

The memory core contains data output latches for ports A and B. These are simple latches that can be reset synchronously or asynchronously. RSTA and RSTB are local signals, which reset the output latches associated with port A and port B respectively. The Global Reset (GSRN) signal resets both ports. The output data latches and associated resets for both ports are as shown in Figure 2-9.

Figure 2-9. Memory Core Reset

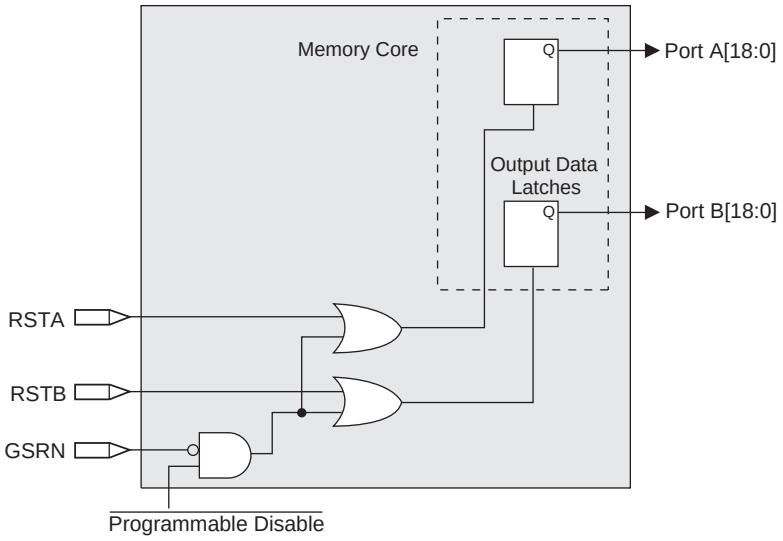

For further information on the sysMEM EBR block, please refer to TN1201, Memory Usage Guide for MachXO2 Devices.

EBR Asynchronous Reset

EBR asynchronous reset or GSR (if used) can only be applied if all clock enables are low for a clock cycle before the reset is applied and released a clock cycle after the reset is released, as shown in Figure 2-10. The GSR input to the EBR is always asynchronous.

Figure 2-10. EBR Asynchronous Reset (Including GSR) Timing Diagram

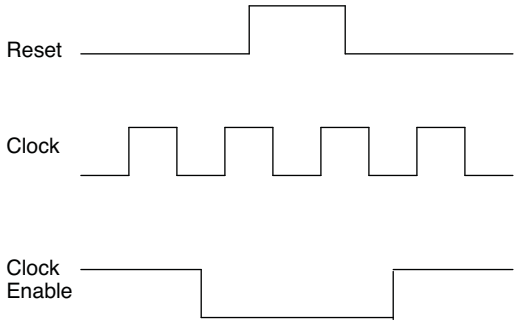

If all clock enables remain enabled, the EBR asynchronous reset or GSR may only be applied and released after the EBR read and write clock inputs are in a steady state condition for a minimum of $1/f_{MAX}$ (EBR clock). The reset release must adhere to the EBR synchronous reset setup time before the next active read or write clock edge.

If an EBR is pre-loaded during configuration, the GSR input must be disabled or the release of the GSR during device wake up must occur before the release of the device I/Os becoming active.

These instructions apply to all EBR RAM, ROM and FIFO implementations. For the EBR FIFO mode, the GSR signal is always enabled and the WE and RE signals act like the clock enable signals in Figure 2-10. The reset timing rules apply to the RPReset input versus the RE input and the RST input versus the WE and RE inputs. Both RST and RPReset are always asynchronous EBR inputs. For more details refer to TN1201, Memory Usage Guide for MachXO2 Devices.

Note that there are no reset restrictions if the EBR synchronous reset is used and the EBR GSR input is disabled.

PIO

The PIO contains three blocks: an input register block, output register block and tri-state register block. These blocks contain registers for operating in a variety of modes along with the necessary clock and selection logic.

Table 2-8. PIO Signal List

Pin Name	I/O Type	Description
CE	Input	Clock Enable
D	Input	Pin input from sysIO buffer.
INDD	Output	Register bypassed input.
INCK	Output	Clock input
Q0	Output	DDR positive edge input
Q1	Output	Registered input/DDR negative edge input
D0	Input	Output signal from the core (SDR and DDR)
D1	Input	Output signal from the core (DDR)
TD	Input	Tri-state signal from the core
Q	Output	Data output signals to sysIO Buffer
TQ	Output	Tri-state output signals to sysIO Buffer
DQSR90[1]	Input	DQS shift 90-degree read clock
DQSW90[1]	Input	DQS shift 90-degree write clock
DDRCLKPOL[1]	Input	DDR input register polarity control signal from DQS
SCLK	Input	System clock for input and output/tri-state blocks.
RST	Input	Local set reset signal

1. Available in PIO on right edge only.

Input Register Block

The input register blocks for the PIOs on all edges contain delay elements and registers that can be used to condition high-speed interface signals before they are passed to the device core. In addition to this functionality, the input register blocks for the PIOs on the right edge include built-in logic to interface to DDR memory.

Figure 2-12 shows the input register block for the PIOs located on the left, top and bottom edges. Figure 2-13 shows the input register block for the PIOs on the right edge.

Left, Top, Bottom Edges

Input signals are fed from the sysIO buffer to the input register block (as signal D). If desired, the input signal can bypass the register and delay elements and be used directly as a combinatorial signal (INDD), and a clock (INCK). If an input delay is desired, users can select a fixed delay. I/Os on the bottom edge also have a dynamic delay, DEL[4:0]. The delay, if selected, reduces input register hold time requirements when using a global clock. The input block allows two modes of operation. In single data rate (SDR) the data is registered with the system clock (SCLK) by one of the registers in the single data rate sync register block. In Generic DDR mode, two registers are used to sample the data on the positive and negative edges of the system clock (SCLK) signal, creating two data streams.

Figure 2-12. MachXO2 Input Register Block Diagram (PIO on Left, Top and Bottom Edges)

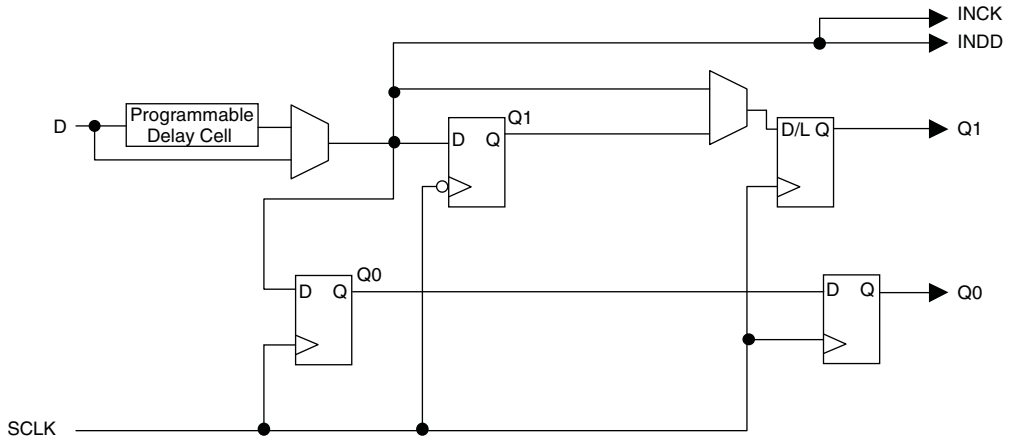

Right Edge

The input register block on the right edge is a superset of the same block on the top, bottom, and left edges. In addition to the modes described above, the input register block on the right edge also supports DDR memory mode.

In DDR memory mode, two registers are used to sample the data on the positive and negative edges of the modified DQS (DQSR90) in the DDR Memory mode creating two data streams. Before entering the core, these two data streams are synchronized to the system clock to generate two data streams.

The signal DDRCLKPOL controls the polarity of the clock used in the synchronization registers. It ensures adequate timing when data is transferred to the system clock domain from the DQS domain. The DQSR90 and DDRCLKPOL signals are generated in the DQS read-write block.

Figure 2-13. MachXO2 Input Register Block Diagram (PIO on Right Edge)

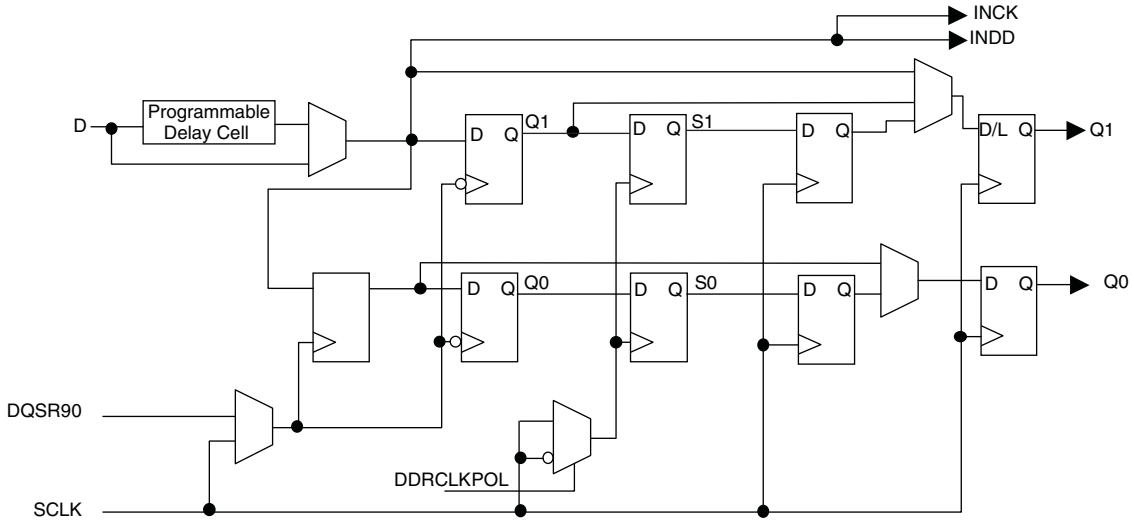

These gearboxes have three stage pipeline registers. The first stage registers sample the high-speed input data by the high-speed edge clock on its rising and falling edges. The second stage registers perform data alignment based on the control signals UPDATE and SEL0 from the control block. The third stage pipeline registers pass the data to the device core synchronized to the low-speed system clock. Figure 2-16 shows a block diagram of the input gearbox.

Figure 2-16. Input Gearbox

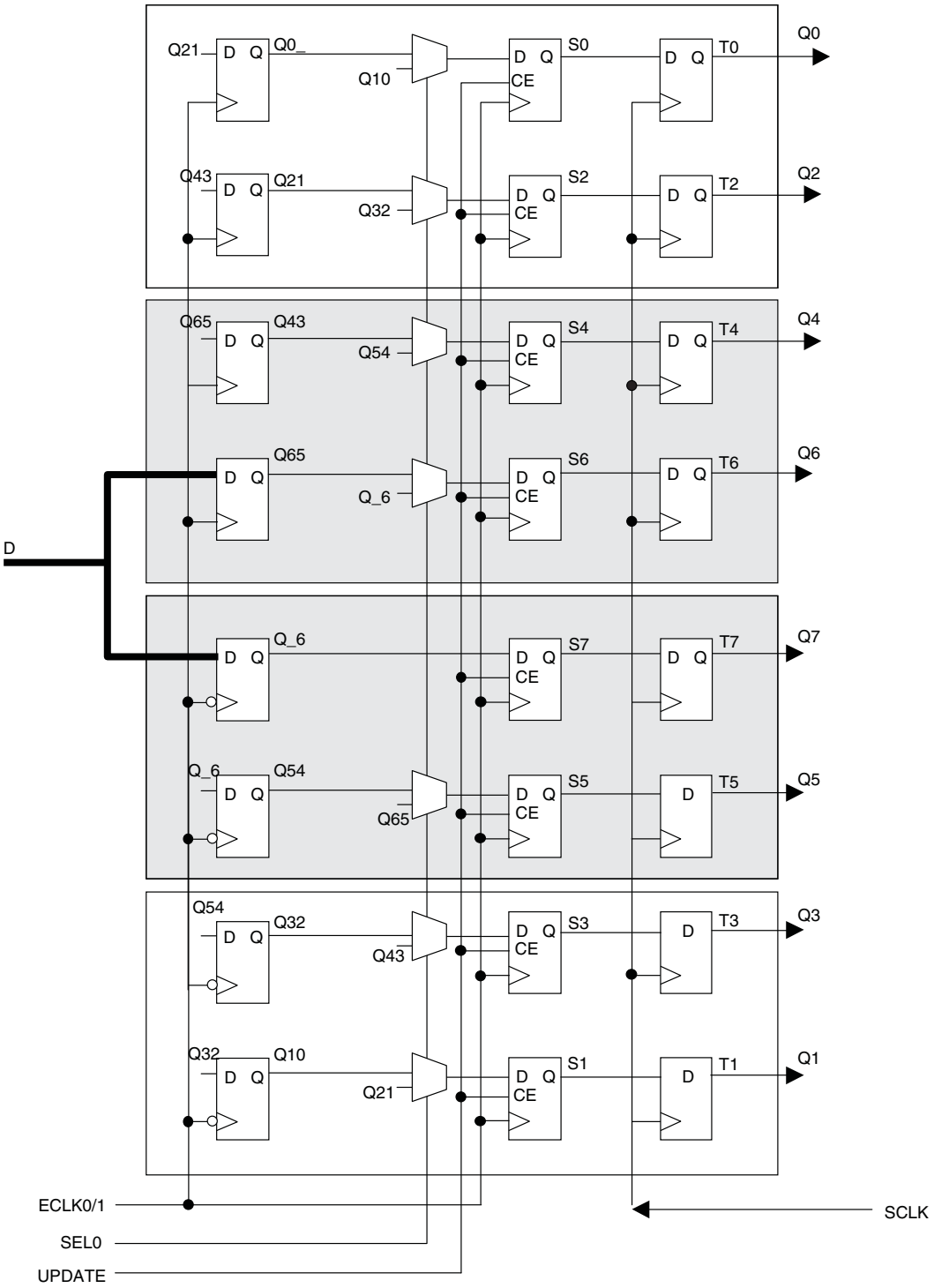

MachXO2-640U, MachXO2-1200/U, MachXO2-2000/U, MachXO2-4000 and MachXO2-7000 devices contain three types of sysIO buffer pairs.

1. **Left and Right sysIO Buffer Pairs**
   The sysIO buffer pairs in the left and right banks of the device consist of two single-ended output drivers and two single-ended input buffers (for ratioed inputs such as LVCMOS and LVTTL). The I/O pairs on the left and right of the devices also have differential and referenced input buffers.

2. **Bottom sysIO Buffer Pairs**
   The sysIO buffer pairs in the bottom bank of the device consist of two single-ended output drivers and two single-ended input buffers (for ratioed inputs such as LVCMOS and LVTTL). The I/O pairs on the bottom also have differential and referenced input buffers. Only the I/Os on the bottom banks have programmable PCI clamps and differential input termination. The PCI clamp is enabled after V_{CC} and V_{CCIO} are at valid operating levels and the device has been configured.

3. **Top sysIO Buffer Pairs**
   The sysIO buffer pairs in the top bank of the device consist of two single-ended output drivers and two single-ended input buffers (for ratioed inputs such as LVCMOS and LVTTL). The I/O pairs on the top also have differential and referenced I/O buffers. Half of the sysIO buffer pairs on the top edge have true differential outputs. The sysIO buffer pair comprising of the A and B PIOs in every PIC on the top edge have a differential output driver. The referenced input buffer can also be configured as a differential input buffer.

Typical I/O Behavior During Power-up

The internal power-on-reset (POR) signal is deactivated when V_{CC} and V_{CCIO0} have reached V_{PORUP} level defined in the Power-On-Reset Voltage table in the DC and Switching Characteristics section of this data sheet. After the POR signal is deactivated, the FPGA core logic becomes active. It is the user's responsibility to ensure that all V_{CCIO} banks are active with valid input logic levels to properly control the output logic states of all the I/O banks that are critical to the application. The default configuration of the I/O pins in a blank device is tri-state with a weak pull-down to GND (some pins such as PROGRAMN and the JTAG pins have weak pull-up to V_{CCIO} as the default functionality). The I/O pins will maintain the blank configuration until V_{CC} and V_{CCIO} (for I/O banks containing configuration I/Os) have reached V_{PORUP} levels at which time the I/Os will take on the user-configured settings only after a proper download/configuration.

Supported Standards

The MachXO2 sysIO buffer supports both single-ended and differential standards. Single-ended standards can be further subdivided into LVCMOS, LVTTL, and PCI. The buffer supports the LVTTL, PCI, LVCMOS 1.2, 1.5, 1.8, 2.5, and 3.3 V standards. In the LVCMOS and LVTTL modes, the buffer has individually configurable options for drive strength, bus maintenance (weak pull-up, weak pull-down, bus-keeper latch or none) and open drain. BLVDS, MLVDS and LVPECL output emulation is supported on all devices. The MachXO2-640U, MachXO2-1200/U and higher devices support on-chip LVDS output buffers on approximately 50% of the I/Os on the top bank. Differential receivers for LVDS, BLVDS, MLVDS and LVPECL are supported on all banks of MachXO2 devices. PCI support is provided in the bottom bank of theMachXO2-640U, MachXO2-1200/U and higher density devices. Table 2-11 summarizes the I/O characteristics of the MachXO2 PLDs.

Tables 2-11 and 2-12 show the I/O standards (together with their supply and reference voltages) supported by the MachXO2 devices. For further information on utilizing the sysIO buffer to support a variety of standards please see TN1202, MachXO2 sysIO Usage Guide.

Table 2-13. Supported Output Standards

Output Standard	V_{CCIO} (Typ.)
Single-Ended Interfaces	
LVTTL	3.3
LVCMOS33	3.3
LVCMOS25	2.5
LVCMOS18	1.8
LVCMOS15	1.5
LVCMOS12	1.2
LVCMOS33, Open Drain	—
LVCMOS25, Open Drain	—
LVCMOS18, Open Drain	—
LVCMOS15, Open Drain	—
LVCMOS12, Open Drain	—
PCI33	3.3
SSTL25 (Class I)	2.5
SSTL18 (Class I)	1.8
HSTL18(Class I)	1.8
Differential Interfaces	
LVDS[1, 2]	2.5, 3.3
BLVDS, MLVDS, RSDS [2]	2.5
LVPECL[2]	3.3
MIPI[2]	2.5
Differential SSTL18	1.8
Differential SSTL25	2.5
Differential HSTL18	1.8

1. MachXO2-640U, MachXO2-1200/U and larger devices have dedicated LVDS buffers.
2. These interfaces can be emulated with external resistors in all devices.

sysIO Buffer Banks

The numbers of banks vary between the devices of this family. MachXO2-1200U, MachXO2-2000/U and higher density devices have six I/O banks (one bank on the top, right and bottom side and three banks on the left side). The MachXO2-1200 and lower density devices have four banks (one bank per side). Figures 2-18 and 2-19 show the sysIO banks and their associated supplies for all devices.

Figure 2-21. I²C Core Block Diagram

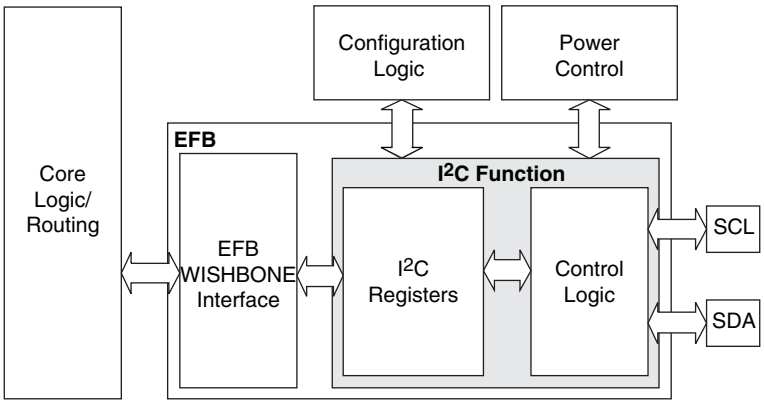

Table 2-15 describes the signals interfacing with the I²C cores.

Table 2-15. I²C Core Signal Description

Signal Name	I/O	Description
i2c_scl	Bi-directional	Bi-directional clock line of the I²C core. The signal is an output if the I²C core is in master mode. The signal is an input if the I²C core is in slave mode. MUST be routed directly to the pre-assigned I/O of the chip. Refer to the Pinout Information section of this document for detailed pad and pin locations of I²C ports in each MachXO2 device.
i2c_sda	Bi-directional	Bi-directional data line of the I²C core. The signal is an output when data is transmitted from the I²C core. The signal is an input when data is received into the I²C core. MUST be routed directly to the pre-assigned I/O of the chip. Refer to the Pinout Information section of this document for detailed pad and pin locations of I²C ports in each MachXO2 device.
i2c_irqo	Output	Interrupt request output signal of the I²C core. The intended usage of this signal is for it to be connected to the WISHBONE master controller (i.e. a microcontroller or state machine) and request an interrupt when a specific condition is met. These conditions are described with the I²C register definitions.
cfg_wake	Output	Wake-up signal – To be connected only to the power module of the MachXO2 device. The signal is enabled only if the “Wakeup Enable” feature has been set within the EFB GUI, I²C Tab.
cfg_stdby	Output	Stand-by signal – To be connected only to the power module of the MachXO2 device. The signal is enabled only if the “Wakeup Enable” feature has been set within the EFB GUI, I²C Tab.

Hardened SPI IP Core

Every MachXO2 device has a hard SPI IP core that can be configured as a SPI master or slave. When the IP core is configured as a master it will be able to control other SPI enabled chips connected to the SPI bus. When the core is configured as the slave, the device will be able to interface to an external SPI master. The SPI IP core on MachXO2 devices supports the following functions:

- Configurable Master and Slave modes
- Full-Duplex data transfer
- Mode fault error flag with CPU interrupt capability
- Double-buffered data register
- Serial clock with programmable polarity and phase
- LSB First or MSB First Data Transfer
- Interface to custom logic through 8-bit WISHBONE interface

Input/Output Standard	V_{IL}		V_{IH}		V_{OL} Max. (V)	V_{OH} Min. (V)	I_{OL} Max.[4] (mA)	I_{OH} Max.[4] (mA)
	Min. (V)[3]	Max. (V)	Min. (V)	Max. (V)				
LVCMOS10R25	–0.3	V_{REF} – 0.1	V_{REF} + 0.1	3.6	0.40	NA Open Drain	16, 12, 8, 4	NA Open Drain

1. MachXO2 devices allow LVCMOS inputs to be placed in I/O banks where V_{CCIO} is different from what is specified in the applicable JEDEC specification. This is referred to as a ratioed input buffer. In a majority of cases this operation follows or exceeds the applicable JEDEC specification. The cases where MachXO2 devices do not meet the relevant JEDEC specification are documented in the table below.
2. MachXO2 devices allow for LVCMOS referenced I/Os which follow applicable JEDEC specifications. For more details about mixed mode operation please refer to please refer to TN1202, MachXO2 sysIO Usage Guide.
3. The dual function I^2C pins SCL and SDA are limited to a V_{IL} min of –0.25 V or to –0.3 V with a duration of <10 ns.
4. For electromigration, the average DC current sourced or sinked by I/O pads between two consecutive VCCIO or GND pad connections, or between the last VCCIO or GND in an I/O bank and the end of an I/O bank, as shown in the Logic Signal Connections table (also shown as I/O grouping) shall not exceed a maximum of n * 8 mA. “n” is the number of I/O pads between the two consecutive bank VCCIO or GND connections or between the last VCCIO and GND in a bank and the end of a bank. IO Grouping can be found in the Data Sheet Pin Tables, which can also be generated from the Lattice Diamond software.

Input Standard	V_{CCIO} (V)	V_{IL} Max. (V)
LVCMOS 33	1.5	0.685
LVCMOS 25	1.5	0.687
LVCMOS 18	1.5	0.655

sysIO Differential Electrical Characteristics

The LVDS differential output buffers are available on the top side of MachXO2-640U, MachXO2-1200/U and higher density devices in the MachXO2 PLD family.

LVDS

Over Recommended Operating Conditions

Parameter Symbol	Parameter Description	Test Conditions	Min.	Typ.	Max.	Units
V_{INP}, V_{INM}	Input Voltage	V_{CCIO} = 3.3 V	0	—	2.605	V
		V_{CCIO} = 2.5 V	0	—	2.05	V
V_{THD}	Differential Input Threshold		±100	—		mV
V_{CM}	Input Common Mode Voltage	V_{CCIO} = 3.3 V	0.05	—	2.6	V
		V_{CCIO} = 2.5 V	0.05	—	2.0	V
I_{IN}	Input current	Power on	—	—	±10	µA
V_{OH}	Output high voltage for V_{OP} or V_{OM}	R_T = 100 Ohm	—	1.375	—	V
V_{OL}	Output low voltage for V_{OP} or V_{OM}	R_T = 100 Ohm	0.90	1.025	—	V
V_{OD}	Output voltage differential	(V_{OP} - V_{OM}), R_T = 100 Ohm	250	350	450	mV
ΔV_{OD}	Change in V_{OD} between high and low		—	—	50	mV
V_{OS}	Output voltage offset	(V_{OP} + V_{OM})/2, R_T = 100 Ohm	1.125	1.20	1.395	V
ΔV_{OS}	Change in V_{OS} between H and L		—	—	50	mV
I_{OSD}	Output short circuit current	V_{OD} = 0 V driver outputs shorted	—	—	24	mA

LVPECL

The MachXO2 family supports the differential LVPECL standard through emulation. This output standard is emulated using complementary LVCMOS outputs in conjunction with resistors across the driver outputs on all the devices. The LVPECL input standard is supported by the LVDS differential input buffer. The scheme shown in Differential LVPECL is one possible solution for point-to-point signals.

Figure 3-3. Differential LVPECL

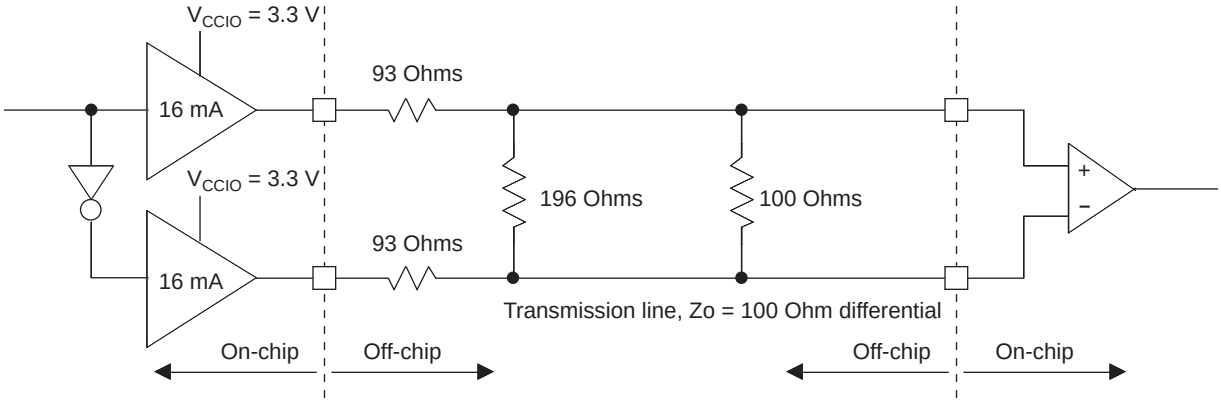

Table 3-3. LVPECL DC Conditions[1]

Over Recommended Operating Conditions

Symbol	Description	Nominal	Units
Z_{OUT}	Output impedance	20	Ohms
R_S	Driver series resistor	93	Ohms
R_P	Driver parallel resistor	196	Ohms
R_T	Receiver termination	100	Ohms
V_{OH}	Output high voltage	2.05	V
V_{OL}	Output low voltage	1.25	V
V_{OD}	Output differential voltage	0.80	V
V_{CM}	Output common mode voltage	1.65	V
Z_{BACK}	Back impedance	100.5	Ohms
I_{DC}	DC output current	12.11	mA

1. For input buffer, see LVDS table.

For further information on LVPECL, BLVDS and other differential interfaces please see details of additional technical documentation at the end of the data sheet.

Signal Descriptions

Signal Name	I/O	Descriptions
General Purpose		
P[Edge] [Row/Column Number]_[A/B/C/D]	I/O	[Edge] indicates the edge of the device on which the pad is located. Valid edge designations are L (Left), B (Bottom), R (Right), T (Top). [Row/Column Number] indicates the PFU row or the column of the device on which the PIO Group exists. When Edge is T (Top) or (Bottom), only need to specify Row Number. When Edge is L (Left) or R (Right), only need to specify Column Number. [A/B/C/D] indicates the PIO within the group to which the pad is connected. Some of these user-programmable pins are shared with special function pins. When not used as special function pins, these pins can be programmed as I/Os for user logic. During configuration of the user-programmable I/Os, the user has an option to tri-state the I/Os and enable an internal pull-up, pull-down or buskeeper resistor. This option also applies to unused pins (or those not bonded to a package pin). The default during configuration is for user-programmable I/Os to be tri-stated with an internal pull-down resistor enabled. When the device is erased, I/Os will be tri-stated with an internal pull-down resistor enabled. Some pins, such as PROGRAMN and JTAG pins, default to tri-stated I/Os with pull-up resistors enabled when the device is erased.
NC	—	No connect.
GND	—	GND – Ground. Dedicated pins. It is recommended that all GNDs are tied together. For QFN 48 package, the exposed die pad is the device ground.
VCC	—	V_{CC} – The power supply pins for core logic. Dedicated pins. It is recommended that all VCCs are tied to the same supply.
VCCIOx	—	VCCIO – The power supply pins for I/O Bank x. Dedicated pins. It is recommended that all VCCIOs located in the same bank are tied to the same supply.
PLL and Clock Functions (Used as user-programmable I/O pins when not used for PLL or clock pins)		
[LOC]_GPLL[T, C]_IN	—	Reference Clock (PLL) input pads: [LOC] indicates location. Valid designations are L (Left PLL) and R (Right PLL). T = true and C = complement.
[LOC]_GPLL[T, C]_FB	—	Optional Feedback (PLL) input pads: [LOC] indicates location. Valid designations are L (Left PLL) and R (Right PLL). T = true and C = complement.
PCLK [n]_[2:0]	—	Primary Clock pads. One to three clock pads per side.
Test and Programming (Dual function pins used for test access port and during sysCONFIG™)		
TMS	I	Test Mode Select input pin, used to control the 1149.1 state machine.
TCK	I	Test Clock input pin, used to clock the 1149.1 state machine.
TDI	I	Test Data input pin, used to load data into the device using an 1149.1 state machine.
TDO	O	Output pin – Test Data output pin used to shift data out of the device using 1149.1.
JTAGENB	I	Optionally controls behavior of TDI, TDO, TMS, TCK. If the device is configured to use the JTAG pins (TDI, TDO, TMS, TCK) as general purpose I/O, then: If JTAGENB is low: TDI, TDO, TMS and TCK can function a general purpose I/O. If JTAGENB is high: TDI, TDO, TMS and TCK function as JTAG pins. For more details, refer to TN1204, MachXO2 Programming and Configuration Usage Guide.
Configuration (Dual function pins used during sysCONFIG)		
PROGRAMN	I	Initiates configuration sequence when asserted low. During configuration, or when reserved as PROGRAMN in user mode, this pin always has an active pull-up.

© 2016 Lattice Semiconductor Corp. All Lattice trademarks, registered trademarks, patents, and disclaimers are as listed at www.latticesemi.com/legal. All other brand or product names are trademarks or registered trademarks of their respective holders. The specifications and information herein are subject to change without notice.

Signal Descriptions (Cont.)

Signal Name	I/O	Descriptions
INITN	I/O	Open Drain pin. Indicates the FPGA is ready to be configured. During configuration, or when reserved as INITn in user mode, this pin has an active pull-up.
DONE	I/O	Open Drain pin. Indicates that the configuration sequence is complete, and the start-up sequence is in progress. During configuration, or when reserved as DONE in user mode, this pin has an active pull-up.
MCLK/CCLK	I/O	Input Configuration Clock for configuring an FPGA in Slave SPI mode. Output Configuration Clock for configuring an FPGA in SPI and SPIm configuration modes.
SN	I	Slave SPI active low chip select input.
CSSPIN	I/O	Master SPI active low chip select output.
SI/SPISI	I/O	Slave SPI serial data input and master SPI serial data output.
SO/SPISO	I/O	Slave SPI serial data output and master SPI serial data input.
SCL	I/O	Slave I^2C clock input and master I^2C clock output.
SDA	I/O	Slave I^2C data input and master I^2C data output.

	MachXO2-2000						MachXO2-2000U
	49 WLCSP	100 TQFP	132 csBGA	144 TQFP	256 caBGA	256 ftBGA	484 ftBGA
General Purpose I/O per Bank							
Bank 0	19	18	25	27	50	50	70
Bank 1	0	21	26	28	52	52	68
Bank 2	13	20	28	28	52	52	72
Bank 3	0	6	7	8	16	16	24
Bank 4	0	6	8	10	16	16	16
Bank 5	6	8	10	10	20	20	28
Total General Purpose Single-Ended I/O	38	79	104	111	206	206	278
Differential I/O per Bank							
Bank 0	7	9	13	14	25	25	35
Bank 1	0	10	13	14	26	26	34
Bank 2	6	10	14	14	26	26	36
Bank 3	0	3	3	4	8	8	12
Bank 4	0	3	4	5	8	8	8
Bank 5	3	4	5	5	10	10	14
Total General Purpose Differential I/O	16	39	52	56	103	103	139
Dual Function I/O	24	31	33	33	33	33	37
High-speed Differential I/O							
Bank 0	5	4	8	9	14	14	18
Gearboxes							
Number of 7:1 or 8:1 Output Gearbox Available (Bank 0)	5	4	8	9	14	14	18
Number of 7:1 or 8:1 Input Gearbox Available (Bank 2)	6	10	14	14	14	14	18
DQS Groups							
Bank 1	0	1	2	2	2	2	2
VCCIO Pins							
Bank 0	2	2	3	3	4	4	10
Bank 1	0	2	3	3	4	4	10
Bank 2	1	2	3	3	4	4	10
Bank 3	0	1	1	1	1	1	3
Bank 4	0	1	1	1	2	2	4
Bank 5	1	1	1	1	1	1	3
VCC	2	2	4	4	8	8	12
GND	4	8	10	12	24	24	48
NC	0	1	1	4	1	1	105
Reserved for Configuration	1	1	1	1	v	1	1
Total Count of Bonded Pins	39	100	132	144	256	256	484

For Further Information

For further information regarding logic signal connections for various packages please refer to the MachXO2 Device Pinout Files.

Thermal Management

Thermal management is recommended as part of any sound FPGA design methodology. To assess the thermal characteristics of a system, Lattice specifies a maximum allowable junction temperature in all device data sheets. Users must complete a thermal analysis of their specific design to ensure that the device and package do not exceed the junction temperature limits. Refer to the Thermal Management document to find the device/package specific thermal values.

For Further Information

For further information regarding Thermal Management, refer to the following:

- Thermal Management document
- TN1198, Power Estimation and Management for MachXO2 Devices
- The Power Calculator tool is included with the Lattice design tools, or as a standalone download from www.latticesemi.com/software

High-Performance Commercial Grade Devices with Voltage Regulator, Halogen Free (RoHS) Packaging

Part Number	LUTs	Supply Voltage	Grade	Package	Leads	Temp.
LCMXO2-256HC-4SG32C	256	2.5 V / 3.3 V	–4	Halogen-Free QFN	32	COM
LCMXO2-256HC-5SG32C	256	2.5 V / 3.3 V	–5	Halogen-Free QFN	32	COM
LCMXO2-256HC-6SG32C	256	2.5 V / 3.3 V	–6	Halogen-Free QFN	32	COM
LCMXO2-256HC-4SG48C	256	2.5 V / 3.3 V	–4	Halogen-Free QFN	48	COM
LCMXO2-256HC-5SG48C	256	2.5 V / 3.3 V	–5	Halogen-Free QFN	48	COM
LCMXO2-256HC-6SG48C	256	2.5 V / 3.3 V	–6	Halogen-Free QFN	48	COM
LCMXO2-256HC-4UMG64C	256	2.5 V / 3.3 V	–4	Halogen-Free ucBGA	64	COM
LCMXO2-256HC-5UMG64C	256	2.5 V / 3.3 V	–5	Halogen-Free ucBGA	64	COM
LCMXO2-256HC-6UMG64C	256	2.5 V / 3.3 V	–6	Halogen-Free ucBGA	64	COM
LCMXO2-256HC-4TG100C	256	2.5 V / 3.3 V	–4	Halogen-Free TQFP	100	COM
LCMXO2-256HC-5TG100C	256	2.5 V / 3.3 V	–5	Halogen-Free TQFP	100	COM
LCMXO2-256HC-6TG100C	256	2.5 V / 3.3 V	–6	Halogen-Free TQFP	100	COM
LCMXO2-256HC-4MG132C	256	2.5 V / 3.3 V	–4	Halogen-Free csBGA	132	COM
LCMXO2-256HC-5MG132C	256	2.5 V / 3.3 V	–5	Halogen-Free csBGA	132	COM
LCMXO2-256HC-6MG132C	256	2.5 V / 3.3 V	–6	Halogen-Free csBGA	132	COM

Part Number	LUTs	Supply Voltage	Grade	Package	Leads	Temp.
LCMXO2-640HC-4SG48C	640	2.5 V / 3.3 V	–4	Halogen-Free QFN	48	COM
LCMXO2-640HC-5SG48C	640	2.5 V / 3.3 V	–5	Halogen-Free QFN	48	COM
LCMXO2-640HC-6SG48C	640	2.5 V / 3.3 V	–6	Halogen-Free QFN	48	COM
LCMXO2-640HC-4TG100C	640	2.5 V / 3.3 V	–4	Halogen-Free TQFP	100	COM
LCMXO2-640HC-5TG100C	640	2.5 V / 3.3 V	–5	Halogen-Free TQFP	100	COM
LCMXO2-640HC-6TG100C	640	2.5 V / 3.3 V	–6	Halogen-Free TQFP	100	COM
LCMXO2-640HC-4MG132C	640	2.5 V / 3.3 V	–4	Halogen-Free csBGA	132	COM
LCMXO2-640HC-5MG132C	640	2.5 V / 3.3 V	–5	Halogen-Free csBGA	132	COM
LCMXO2-640HC-6MG132C	640	2.5 V / 3.3 V	–6	Halogen-Free csBGA	132	COM

Part Number	LUTs	Supply Voltage	Grade	Package	Leads	Temp.
LCMXO2-640UHC-4TG144C	640	2.5 V / 3.3 V	–4	Halogen-Free TQFP	144	COM
LCMXO2-640UHC-5TG144C	640	2.5 V / 3.3 V	–5	Halogen-Free TQFP	144	COM
LCMXO2-640UHC-6TG144C	640	2.5 V / 3.3 V	–6	Halogen-Free TQFP	144	COM