Lattice Semiconductor Corporation - LCMXO2-640ZE-3TG100I Datasheet

Welcome to E-XFL.COM

Understanding Embedded - FPGAs (Field Programmable Gate Array)

Embedded - FPGAs, or Field Programmable Gate Arrays, are advanced integrated circuits that offer unparalleled flexibility and performance for digital systems. Unlike traditional fixed-function logic devices, FPGAs can be programmed and reprogrammed to execute a wide array of logical operations, enabling customized functionality tailored to specific applications. This reprogrammability allows developers to iterate designs quickly and implement complex functions without the need for custom hardware.

Applications of Embedded - FPGAs

The versatility of Embedded - FPGAs makes them indispensable in numerous fields. In telecommunications.

Details	
Product Status	Active
Number of LABs/CLBs	80
Number of Logic Elements/Cells	640
Total RAM Bits	18432
Number of I/O	78
Number of Gates	-
Voltage - Supply	1.14V ~ 1.26V
Mounting Type	Surface Mount
Operating Temperature	-40°C ~ 100°C (TJ)
Package / Case	100-LQFP
Supplier Device Package	100-TQFP (14x14)
Purchase URL	https://www.e-xfl.com/product-detail/lattice-semiconductor/lcmxo2-640ze-3tg100i

Figure 2-3. PFU Block Diagram

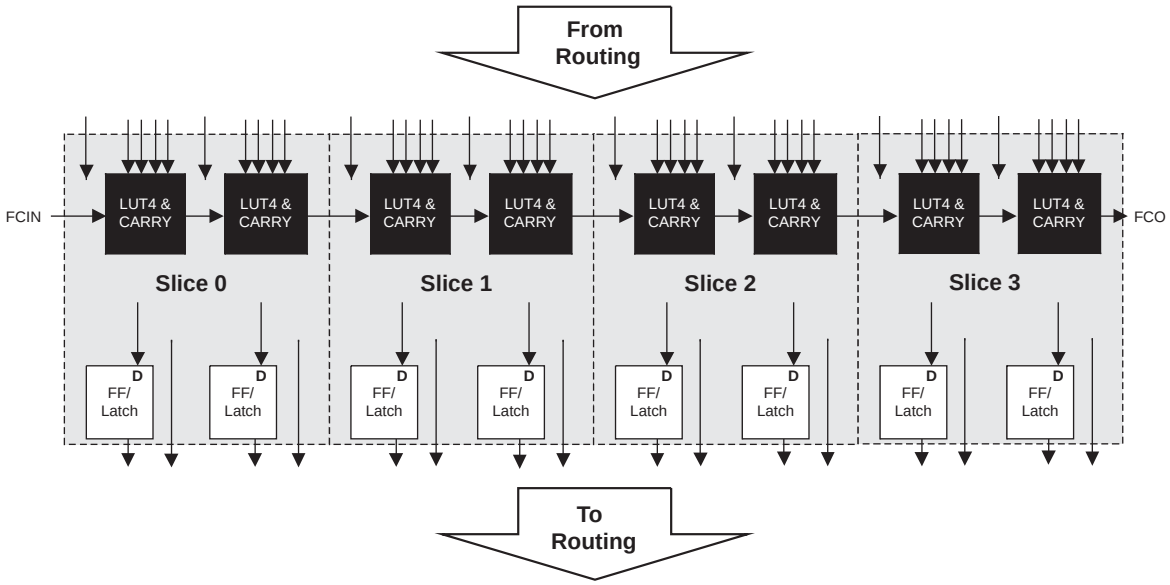

Slices

Slices 0-3 contain two LUT4s feeding two registers. Slices 0-2 can be configured as distributed memory. Table 2-1 shows the capability of the slices in PFU blocks along with the operation modes they enable. In addition, each PFU contains logic that allows the LUTs to be combined to perform functions such as LUT5, LUT6, LUT7 and LUT8. The control logic performs set/reset functions (programmable as synchronous/ asynchronous), clock select, chip-select and wider RAM/ROM functions.

Table 2-1. Resources and Modes Available per Slice

Slice	PFU Block	
	Resources	Modes
Slice 0	2 LUT4s and 2 Registers	Logic, Ripple, RAM, ROM
Slice 1	2 LUT4s and 2 Registers	Logic, Ripple, RAM, ROM
Slice 2	2 LUT4s and 2 Registers	Logic, Ripple, RAM, ROM
Slice 3	2 LUT4s and 2 Registers	Logic, Ripple, ROM

Figure 2-4 shows an overview of the internal logic of the slice. The registers in the slice can be configured for positive/negative and edge triggered or level sensitive clocks. All slices have 15 inputs from routing and one from the carry-chain (from the adjacent slice or PFU). There are seven outputs: six for routing and one to carry-chain (to the adjacent PFU). Table 2-2 lists the signals associated with Slices 0-3.

Modes of Operation

Each slice has up to four potential modes of operation: Logic, Ripple, RAM and ROM.

Logic Mode

In this mode, the LUTs in each slice are configured as 4-input combinatorial lookup tables. A LUT4 can have 16 possible input combinations. Any four input logic functions can be generated by programming this lookup table. Since there are two LUT4s per slice, a LUT5 can be constructed within one slice. Larger look-up tables such as LUT6, LUT7 and LUT8 can be constructed by concatenating other slices. Note LUT8 requires more than four slices.

Ripple Mode

Ripple mode supports the efficient implementation of small arithmetic functions. In Ripple mode, the following functions can be implemented by each slice:

- Addition 2-bit
- Subtraction 2-bit
- Add/subtract 2-bit using dynamic control
- Up counter 2-bit
- Down counter 2-bit
- Up/down counter with asynchronous clear
- Up/down counter with preload (sync)
- Ripple mode multiplier building block
- Multiplier support
- Comparator functions of A and B inputs
  — A greater-than-or-equal-to B
  — A not-equal-to B
  — A less-than-or-equal-to B

Ripple mode includes an optional configuration that performs arithmetic using fast carry chain methods. In this configuration (also referred to as CCU2 mode) two additional signals, Carry Generate and Carry Propagate, are generated on a per-slice basis to allow fast arithmetic functions to be constructed by concatenating slices.

RAM Mode

In this mode, a 16x4-bit distributed single port RAM (SPR) can be constructed by using each LUT block in Slice 0 and Slice 1 as a 16x1-bit memory. Slice 2 is used to provide memory address and control signals.

MachXO2 devices support distributed memory initialization.

The Lattice design tools support the creation of a variety of different size memories. Where appropriate, the software will construct these using distributed memory primitives that represent the capabilities of the PFU. Table 2-3 shows the number of slices required to implement different distributed RAM primitives. For more information about using RAM in MachXO2 devices, please see TN1201, Memory Usage Guide for MachXO2 Devices.

Table 2-3. Number of Slices Required For Implementing Distributed RAM

	SPR 16x4	PDPR 16x4
Number of slices	3	3

Note: SPR = Single Port RAM, PDPR = Pseudo Dual Port RAM

Figure 2-8. sysMEM Memory Primitives

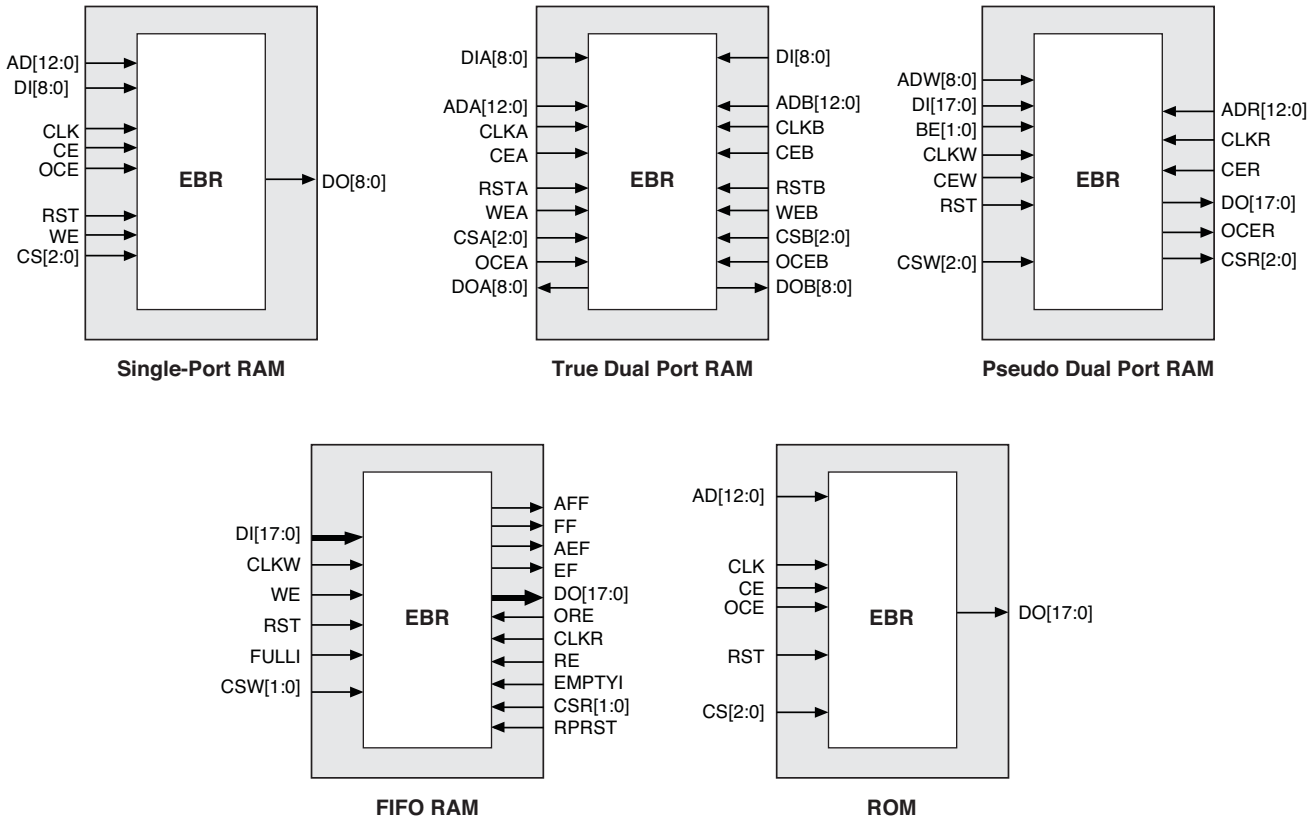

Table 2-6. EBR Signal Descriptions

Port Name	Description	Active State
CLK	Clock	Rising Clock Edge
CE	Clock Enable	Active High
OCE[1]	Output Clock Enable	Active High
RST	Reset	Active High
BE[1]	Byte Enable	Active High
WE	Write Enable	Active High
AD	Address Bus	—
DI	Data In	—
DO	Data Out	—
CS	Chip Select	Active High
AFF	FIFO RAM Almost Full Flag	—
FF	FIFO RAM Full Flag	—
AEF	FIFO RAM Almost Empty Flag	—
EF	FIFO RAM Empty Flag	—
RPRST	FIFO RAM Read Pointer Reset	—

1. Optional signals.
2. For dual port EBR primitives a trailing ‘A’ or ‘B’ in the signal name specifies the EBR port A or port B respectively.
3. For FIFO RAM mode primitive, a trailing ‘R’ or ‘W’ in the signal name specifies the FIFO read port or write port respectively.
4. For FIFO RAM mode primitive FULLI has the same function as CSW(2) and EMPTYI has the same function as CSR(2).
5. In FIFO mode, CLKW is the write port clock, CSW is the write port chip select, CLKR is the read port clock, CSR is the read port chip select, ORE is the output read enable.

Output Register Block

The output register block registers signals from the core of the device before they are passed to the sysIO buffers.

Left, Top, Bottom Edges

In SDR mode, D0 feeds one of the flip-flops that then feeds the output. The flip-flop can be configured as a D-type register or latch.

In DDR generic mode, D0 and D1 inputs are fed into registers on the positive edge of the clock. At the next falling edge the registered D1 input is registered into the register Q1. A multiplexer running off the same clock is used to switch the mux between the outputs of registers Q0 and Q1 that will then feed the output.

Figure 2-14 shows the output register block on the left, top and bottom edges.

Figure 2-14. MachXO2 Output Register Block Diagram (PIO on the Left, Top and Bottom Edges)

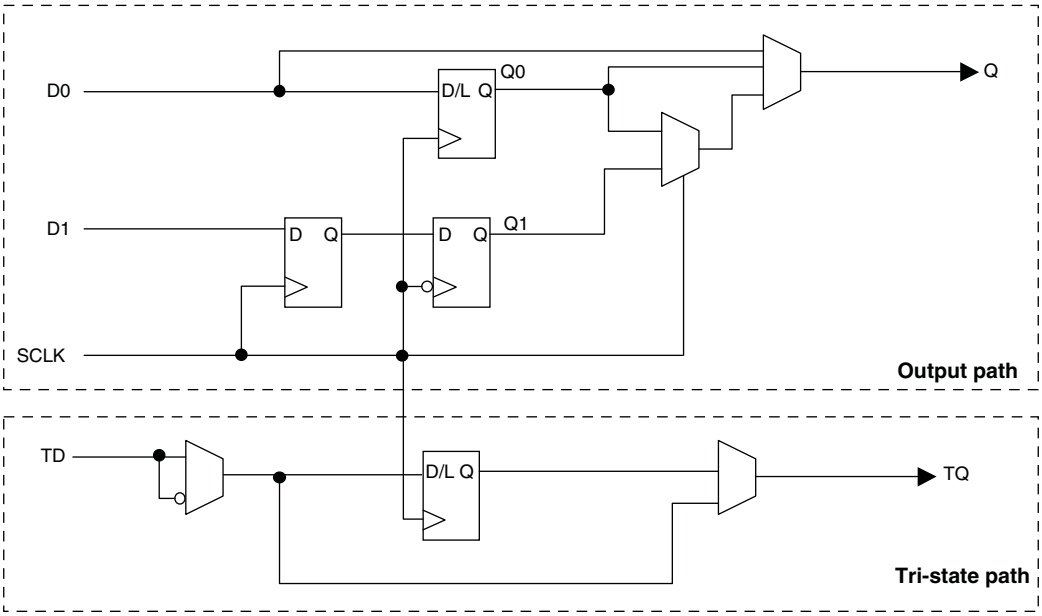

Right Edge

The output register block on the right edge is a superset of the output register on left, top and bottom edges of the device. In addition to supporting SDR and Generic DDR modes, the output register blocks for PIOs on the right edge include additional logic to support DDR-memory interfaces. Operation of this block is similar to that of the output register block on other edges.

In DDR memory mode, D0 and D1 inputs are fed into registers on the positive edge of the clock. At the next falling edge the registered D1 input is registered into the register Q1. A multiplexer running off the DQSW90 signal is used to switch the mux between the outputs of registers Q0 and Q1 that will then feed the output.

Figure 2-15 shows the output register block on the right edge.

Hardened Timer/Counter

MachXO2 devices provide a hard Timer/Counter IP core. This Timer/Counter is a general purpose, bi-directional, 16-bit timer/counter module with independent output compare units and PWM support. The Timer/Counter supports the following functions:

- Supports the following modes of operation:
  — Watchdog timer
  — Clear timer on compare match
  — Fast PWM
  — Phase and Frequency Correct PWM
- Programmable clock input source
- Programmable input clock prescaler
- One static interrupt output to routing
- One wake-up interrupt to on-chip standby mode controller.
- Three independent interrupt sources: overflow, output compare match, and input capture
- Auto reload
- Time-stamping support on the input capture unit
- Waveform generation on the output
- Glitch-free PWM waveform generation with variable PWM period
- Internal WISHBONE bus access to the control and status registers
- Stand-alone mode with preloaded control registers and direct reset input

Figure 2-23. Timer/Counter Block Diagram

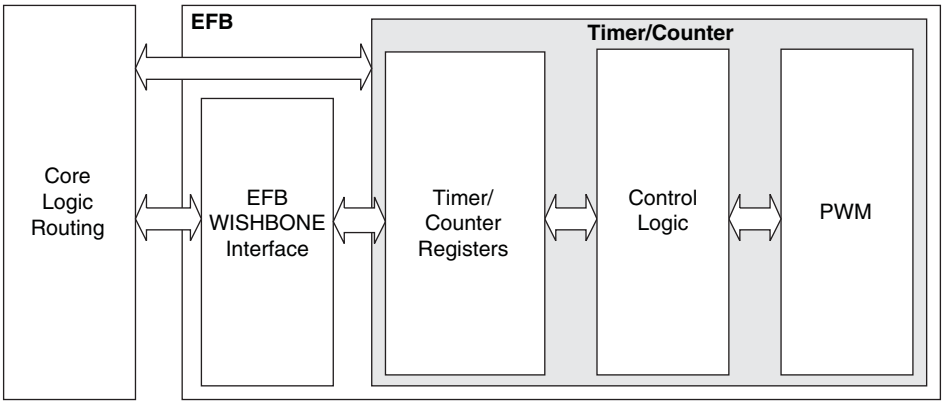

Table 2-17. Timer/Counter Signal Description

Port	I/O	Description
tc_clki	I	Timer/Counter input clock signal
tc_rstn	I	Register tc_rstn_ena is preloaded by configuration to always keep this pin enabled
tc_ic	I	Input capture trigger event, applicable for non-pwm modes with WISHBONE interface. If enabled, a rising edge of this signal will be detected and synchronized to capture tc_cnt value into tc_icr for time-stamping.
tc_int	O	Without WISHBONE – Can be used as overflow flag With WISHBONE – Controlled by three IRQ registers
tc_oc	O	Timer counter output signal

MachXO2 Family Data Sheet DC and Switching Characteristics

March 2017 Data Sheet DS1035

Absolute Maximum Ratings[1, 2, 3]

	MachXO2 ZE/HE (1.2 V)	MachXO2 HC (2.5 V / 3.3 V)
Supply Voltage V_{CC}	–0.5 V to 1.32 V	–0.5 V to 3.75 V
Output Supply Voltage V_{CCIO}	–0.5 V to 3.75 V	–0.5 V to 3.75 V
I/O Tri-state Voltage Applied[4, 5]	–0.5 V to 3.75 V	–0.5 V to 3.75 V
Dedicated Input Voltage Applied[4]	–0.5 V to 3.75 V	–0.5 V to 3.75 V
Storage Temperature (Ambient)	–55 °C to 125 °C	–55 °C to 125 °C
Junction Temperature (T_J)	–40 °C to 125 °C	–40 °C to 125 °C

1. Stress above those listed under the “Absolute Maximum Ratings” may cause permanent damage to the device. Functional operation of the device at these or any other conditions above those indicated in the operational sections of this specification is not implied.
2. Compliance with the Lattice Thermal Management document is required.
3. All voltages referenced to GND.
4. Overshoot and undershoot of –2 V to (V_{IHMAX} + 2) volts is permitted for a duration of <20 ns.
5. The dual function I^2C pins SCL and SDA are limited to –0.25 V to 3.75 V or to –0.3 V with a duration of <20 ns.

Recommended Operating Conditions[1]

Symbol	Parameter	Min.	Max.	Units
V_{CC}[1]	Core Supply Voltage for 1.2 V Devices	1.14	1.26	V
	Core Supply Voltage for 2.5 V / 3.3 V Devices	2.375	3.6	V
V_{CCIO}[1, 2, 3]	I/O Driver Supply Voltage	1.14	3.6	V
t_{JCOM}	Junction Temperature Commercial Operation	0	85	°C
t_{JIND}	Junction Temperature Industrial Operation	–40	100	°C

1. Like power supplies must be tied together. For example, if V_{CCIO} and V_{CC} are both the same voltage, they must also be the same supply.
2. See recommended voltages by I/O standard in subsequent table.
3. V_{CCIO} pins of unused I/O banks should be connected to the V_{CC} power supply on boards.

Power Supply Ramp Rates[1]

Symbol	Parameter	Min.	Typ.	Max.	Units
t_{RAMP}	Power supply ramp rates for all power supplies.	0.01	—	100	V/ms

1. Assumes monotonic ramp rates.

© 2017 Lattice Semiconductor Corp. All Lattice trademarks, registered trademarks, patents, and disclaimers are as listed at www.latticesemi.com/legal. All other brand or product names are trademarks or registered trademarks of their respective holders. The specifications and information herein are subject to change without notice.

Static Supply Current – ZE Devices[1, 2, 3, 6]

Symbol	Parameter	Device	Typ.[4]	Units
I_{CC}	Core Power Supply	LCMXO2-256ZE	18	µA
		LCMXO2-640ZE	28	µA
		LCMXO2-1200ZE	56	µA
		LCMXO2-2000ZE	80	µA
		LCMXO2-4000ZE	124	µA
		LCMXO2-7000ZE	189	µA
I_{CCIO}	Bank Power Supply[5] V_{CCIO} = 2.5 V	All devices	1	µA

1. For further information on supply current, please refer to TN1198, Power Estimation and Management for MachXO2 Devices.
2. Assumes blank pattern with the following characteristics: all outputs are tri-stated, all inputs are configured as LVCMOS and held at V_{CCIO} or GND, on-chip oscillator is off, on-chip PLL is off. To estimate the impact of turning each of these items on, please refer to the following table or for more detail with your specific design use the Power Calculator tool.
3. Frequency = 0 MHz.
4. T_J = 25 °C, power supplies at nominal voltage.
5. Does not include pull-up/pull-down.
6. To determine the MachXO2 peak start-up current data, use the Power Calculator tool.

Static Power Consumption Contribution of Different Components – ZE Devices

The table below can be used for approximating static power consumption. For a more accurate power analysis for your design please use the Power Calculator tool.

Symbol	Parameter	Typ.	Units
I_{DCBG}	Bandgap DC power contribution	101	µA
I_{DCPOR}	POR DC power contribution	38	µA
$I_{DCIOBANKCONTROLLER}$	DC power contribution per I/O bank controller	143	µA

Programming and Erase Flash Supply Current – ZE Devices[1, 2, 3, 4]

Symbol	Parameter	Device	Typ.[5]	Units
I_{CC}	Core Power Supply	LCMXO2-256ZE	13	mA
		LCMXO2-640ZE	14	mA
		LCMXO2-1200ZE	15	mA
		LCMXO2-2000ZE	17	mA
		LCMXO2-4000ZE	18	mA
		LCMXO2-7000ZE	20	mA
I_{CCIO}	Bank Power Supply[6]	All devices	0	mA

1. For further information on supply current, please refer to TN1198, Power Estimation and Management for MachXO2 Devices.
2. Assumes all inputs are held at V_{CCIO} or GND and all outputs are tri-stated.
3. Typical user pattern.
4. JTAG programming is at 25 MHz.
5. TJ = 25 °C, power supplies at nominal voltage.
6. Per bank. V_{CCIO} = 2.5 V. Does not include pull-up/pull-down.

Typical Building Block Function Performance – HC/HE Devices[1]

Pin-to-Pin Performance (LVCMOS25 12 mA Drive)

Function	-6 Timing	Units
Basic Functions		
16-bit decoder	8.9	ns
4:1 MUX	7.5	ns
16:1 MUX	8.3	ns

Register-to-Register Performance

Function	-6 Timing	Units
Basic Functions		
16:1 MUX	412	MHz
16-bit adder	297	MHz
16-bit counter	324	MHz
64-bit counter	161	MHz
Embedded Memory Functions		
1024x9 True-Dual Port RAM (Write Through or Normal, EBR output registers)	183	MHz
Distributed Memory Functions		
16x4 Pseudo-Dual Port RAM (one PFU)	500	MHz

1. The above timing numbers are generated using the Diamond design tool. Exact performance may vary with device and tool version. The tool uses internal parameters that have been characterized but are not tested on every device. Commercial timing numbers are shown at 85 °C and 1.14 V. Other operating conditions, including industrial, can be extracted from the Diamond software.

Parameter	Description	Device	–6		–5		–4		Units
			Min.	Max.	Min.	Max.	Min.	Max.	
t_{SU_DEL}	Clock to Data Setup – PIO Input Register with Data Input Delay	MachXO2-256HC-HE	1.42	—	1.59	—	1.96	—	ns
		MachXO2-640HC-HE	1.41	—	1.58	—	1.96	—	ns
		MachXO2-1200HC-HE	1.63	—	1.79	—	2.17	—	ns
		MachXO2-2000HC-HE	1.61	—	1.76	—	2.13	—	ns
		MachXO2-4000HC-HE	1.66	—	1.81	—	2.19	—	ns
		MachXO2-7000HC-HE	1.53	—	1.67	—	2.03	—	ns
t_{H_DEL}	Clock to Data Hold – PIO Input Register with Input Data Delay	MachXO2-256HC-HE	–0.24	—	–0.24	—	–0.24	—	ns
		MachXO2-640HC-HE	–0.23	—	–0.23	—	–0.23	—	ns
		MachXO2-1200HC-HE	–0.24	—	–0.24	—	–0.24	—	ns
		MachXO2-2000HC-HE	–0.23	—	–0.23	—	–0.23	—	ns
		MachXO2-4000HC-HE	–0.25	—	–0.25	—	–0.25	—	ns
		MachXO2-7000HC-HE	–0.21	—	–0.21	—	–0.21	—	ns
f_{MAX_IO}	Clock Frequency of I/O and PFU Register	All MachXO2 devices	—	388	—	323	—	269	MHz
General I/O Pin Parameters (Using Edge Clock without PLL)									
t_{COE}	Clock to Output – PIO Output Register	MachXO2-1200HC-HE	—	7.53	—	7.76	—	8.10	ns
		MachXO2-2000HC-HE	—	7.53	—	7.76	—	8.10	ns
		MachXO2-4000HC-HE	—	7.45	—	7.68	—	8.00	ns
		MachXO2-7000HC-HE	—	7.53	—	7.76	—	8.10	ns
t_{SUE}	Clock to Data Setup – PIO Input Register	MachXO2-1200HC-HE	–0.19	—	–0.19	—	–0.19	—	ns
		MachXO2-2000HC-HE	–0.19	—	–0.19	—	–0.19	—	ns
		MachXO2-4000HC-HE	–0.16	—	–0.16	—	–0.16	—	ns
		MachXO2-7000HC-HE	–0.19	—	–0.19	—	–0.19	—	ns
t_{HE}	Clock to Data Hold – PIO Input Register	MachXO2-1200HC-HE	1.97	—	2.24	—	2.52	—	ns
		MachXO2-2000HC-HE	1.97	—	2.24	—	2.52	—	ns
		MachXO2-4000HC-HE	1.89	—	2.16	—	2.43	—	ns
		MachXO2-7000HC-HE	1.97	—	2.24	—	2.52	—	ns
t_{SU_DELE}	Clock to Data Setup – PIO Input Register with Data Input Delay	MachXO2-1200HC-HE	1.56	—	1.69	—	2.05	—	ns
		MachXO2-2000HC-HE	1.56	—	1.69	—	2.05	—	ns
		MachXO2-4000HC-HE	1.74	—	1.88	—	2.25	—	ns
		MachXO2-7000HC-HE	1.66	—	1.81	—	2.17	—	ns
t_{H_DELE}	Clock to Data Hold – PIO Input Register with Input Data Delay	MachXO2-1200HC-HE	–0.23	—	–0.23	—	–0.23	—	ns
		MachXO2-2000HC-HE	–0.23	—	–0.23	—	–0.23	—	ns
		MachXO2-4000HC-HE	–0.34	—	–0.34	—	–0.34	—	ns
		MachXO2-7000HC-HE	–0.29	—	–0.29	—	–0.29	—	ns
General I/O Pin Parameters (Using Primary Clock with PLL)									
t_{COPLL}	Clock to Output – PIO Output Register	MachXO2-1200HC-HE	—	5.97	—	6.00	—	6.13	ns
		MachXO2-2000HC-HE	—	5.98	—	6.01	—	6.14	ns
		MachXO2-4000HC-HE	—	5.99	—	6.02	—	6.16	ns
		MachXO2-7000HC-HE	—	6.02	—	6.06	—	6.20	ns
t_{SUPLL}	Clock to Data Setup – PIO Input Register	MachXO2-1200HC-HE	0.36	—	0.36	—	0.65	—	ns
		MachXO2-2000HC-HE	0.36	—	0.36	—	0.63	—	ns
		MachXO2-4000HC-HE	0.35	—	0.35	—	0.62	—	ns
		MachXO2-7000HC-HE	0.34	—	0.34	—	0.59	—	ns

Parameter	Description	Device	–6		–5		–4		Units
			Min.	Max.	Min.	Max.	Min.	Max.	
Generic DDR4 Inputs with Clock and Data Aligned at Pin Using PCLK Pin for Clock Input – GDDRX4_RX.ECLK.Aligned[9, 12]									
t_{DVA}	Input Data Valid After ECLK	MachXO2-640U, MachXO2-1200/U and larger devices, bottom side only.[11]	—	0.290	—	0.320	—	0.345	UI
t_{DVE}	Input Data Hold After ECLK		0.739	—	0.699	—	0.703	—	UI
f_{DATA}	DDRX4 Serial Input Data Speed		—	756	—	630	—	524	Mbps
f_{DDRX4}	DDRX4 ECLK Frequency		—	378	—	315	—	262	MHz
f_{SCLK}	SCLK Frequency		—	95	—	79	—	66	MHz
Generic DDR4 Inputs with Clock and Data Centered at Pin Using PCLK Pin for Clock Input – GDDRX4_RX.ECLK.Centered[9, 12]									
t_{SU}	Input Data Setup Before ECLK	MachXO2-640U, MachXO2-1200/U and larger devices, bottom side only.[11]	0.233	—	0.219	—	0.198	—	ns
t_{HO}	Input Data Hold After ECLK		0.287	—	0.287	—	0.344	—	ns
f_{DATA}	DDRX4 Serial Input Data Speed		—	756	—	630	—	524	Mbps
f_{DDRX4}	DDRX4 ECLK Frequency		—	378	—	315	—	262	MHz
f_{SCLK}	SCLK Frequency		—	95	—	79	—	66	MHz
7:1 LVDS Inputs (GDDR71_RX.ECLK.7:1)[9, 12]									
t_{DVA}	Input Data Valid After ECLK	MachXO2-640U, MachXO2-1200/U and larger devices, bottom side only.[11]	—	0.290	—	0.320	—	0.345	UI
t_{DVE}	Input Data Hold After ECLK		0.739	—	0.699	—	0.703	—	UI
f_{DATA}	DDR71 Serial Input Data Speed		—	756	—	630	—	524	Mbps
f_{DDR71}	DDR71 ECLK Frequency		—	378	—	315	—	262	MHz
f_{CLKIN}	7:1 Input Clock Frequency (SCLK) (minimum limited by PLL)		—	108	—	90	—	75	MHz
Generic DDR Outputs with Clock and Data Aligned at Pin Using PCLK Pin for Clock Input – GDDRX1_TX.SCLK.Aligned[9, 12]									
t_{DIA}	Output Data Invalid After CLK Output	All MachXO2 devices, all sides.	—	0.520	—	0.550	—	0.580	ns
t_{DIB}	Output Data Invalid Before CLK Output		—	0.520	—	0.550	—	0.580	ns
f_{DATA}	DDRX1 Output Data Speed		—	300	—	250	—	208	Mbps
f_{DDRX1}	DDRX1 SCLK frequency		—	150	—	125	—	104	MHz
Generic DDR Outputs with Clock and Data Centered at Pin Using PCLK Pin for Clock Input – GDDRX1_TX.SCLK.Centered[9, 12]									
t_{DVB}	Output Data Valid Before CLK Output	All MachXO2 devices, all sides.	1.210	—	1.510	—	1.870	—	ns
t_{DVA}	Output Data Valid After CLK Output		1.210	—	1.510	—	1.870	—	ns
f_{DATA}	DDRX1 Output Data Speed		—	300	—	250	—	208	Mbps
f_{DDRX1}	DDRX1 SCLK Frequency (minimum limited by PLL)		—	150	—	125	—	104	MHz
Generic DDRX2 Outputs with Clock and Data Aligned at Pin Using PCLK Pin for Clock Input – GDDRX2_TX.ECLK.Aligned[9, 12]									
t_{DIA}	Output Data Invalid After CLK Output	MachXO2-640U, MachXO2-1200/U and larger devices, top side only.	—	0.200	—	0.215	—	0.230	ns
t_{DIB}	Output Data Invalid Before CLK Output		—	0.200	—	0.215	—	0.230	ns
f_{DATA}	DDRX2 Serial Output Data Speed		—	664	—	554	—	462	Mbps
f_{DDRX2}	DDRX2 ECLK frequency		—	332	—	277	—	231	MHz
f_{SCLK}	SCLK Frequency		—	166	—	139	—	116	MHz

Parameter	Description	Device	–3		–2		–1		Units
			Min.	Max.	Min.	Max.	Min.	Max.	
t_{SU_DEL}	Clock to Data Setup – PIO Input Register with Data Input Delay	MachXO2-256ZE	2.62	—	2.91	—	3.14	—	ns
		MachXO2-640ZE	2.56	—	2.85	—	3.08	—	ns
		MachXO2-1200ZE	2.30	—	2.57	—	2.79	—	ns
		MachXO2-2000ZE	2.25	—	2.50	—	2.70	—	ns
		MachXO2-4000ZE	2.39	—	2.60	—	2.76	—	ns
		MachXO2-7000ZE	2.17	—	2.33	—	2.43	—	ns
t_{H_DEL}	Clock to Data Hold – PIO Input Register with Input Data Delay	MachXO2-256ZE	–0.44	—	–0.44	—	–0.44	—	ns
		MachXO2-640ZE	–0.43	—	–0.43	—	–0.43	—	ns
		MachXO2-1200ZE	–0.28	—	–0.28	—	–0.28	—	ns
		MachXO2-2000ZE	–0.31	—	–0.31	—	–0.31	—	ns
		MachXO2-4000ZE	–0.34	—	–0.34	—	–0.34	—	ns
		MachXO2-7000ZE	–0.21	—	–0.21	—	–0.21	—	ns
f_{MAX_IO}	Clock Frequency of I/O and PFU Register	All MachXO2 devices	—	150	—	125	—	104	MHz
General I/O Pin Parameters (Using Edge Clock without PLL)									
t_{COE}	Clock to Output – PIO Output Register	MachXO2-1200ZE	—	11.10	—	11.51	—	11.91	ns
		MachXO2-2000ZE	—	11.10	—	11.51	—	11.91	ns
		MachXO2-4000ZE	—	10.89	—	11.28	—	11.67	ns
		MachXO2-7000ZE	—	11.10	—	11.51	—	11.91	ns
t_{SUE}	Clock to Data Setup – PIO Input Register	MachXO2-1200ZE	–0.23	—	–0.23	—	–0.23	—	ns
		MachXO2-2000ZE	–0.23	—	–0.23	—	–0.23	—	ns
		MachXO2-4000ZE	–0.15	—	–0.15	—	–0.15	—	ns
		MachXO2-7000ZE	–0.23	—	–0.23	—	–0.23	—	ns
t_{HE}	Clock to Data Hold – PIO Input Register	MachXO2-1200ZE	3.81	—	4.11	—	4.52	—	ns
		MachXO2-2000ZE	3.81	—	4.11	—	4.52	—	ns
		MachXO2-4000ZE	3.60	—	3.89	—	4.28	—	ns
		MachXO2-7000ZE	3.81	—	4.11	—	4.52	—	ns
t_{SU_DELE}	Clock to Data Setup – PIO Input Register with Data Input Delay	MachXO2-1200ZE	2.78	—	3.11	—	3.40	—	ns
		MachXO2-2000ZE	2.78	—	3.11	—	3.40	—	ns
		MachXO2-4000ZE	3.11	—	3.48	—	3.79	—	ns
		MachXO2-7000ZE	2.94	—	3.30	—	3.60	—	ns
t_{H_DELE}	Clock to Data Hold – PIO Input Register with Input Data Delay	MachXO2-1200ZE	–0.29	—	-0.29	—	–0.29	—	ns
		MachXO2-2000ZE	–0.29	—	-0.29	—	–0.29	—	ns
		MachXO2-4000ZE	–0.46	—	-0.46	—	–0.46	—	ns
		MachXO2-7000ZE	–0.37	—	-0.37	—	–0.37	—	ns
General I/O Pin Parameters (Using Primary Clock with PLL)									
t_{COPLL}	Clock to Output – PIO Output Register	MachXO2-1200ZE	—	7.95	—	8.07	—	8.19	ns
		MachXO2-2000ZE	—	7.97	—	8.10	—	8.22	ns
		MachXO2-4000ZE	—	7.98	—	8.10	—	8.23	ns
		MachXO2-7000ZE	—	8.02	—	8.14	—	8.26	ns
t_{SUPLL}	Clock to Data Setup – PIO Input Register	MachXO2-1200ZE	0.85	—	0.85	—	0.89	—	ns
		MachXO2-2000ZE	0.84	—	0.84	—	0.86	—	ns
		MachXO2-4000ZE	0.84	—	0.84	—	0.85	—	ns
		MachXO2-7000ZE	0.83	—	0.83	—	0.81	—	ns

Parameter	Description	Device	–3		–2		–1		Units
			Min.	Max.	Min.	Max.	Min.	Max.	
t_{HPLL}	Clock to Data Hold – PIO Input Register	MachXO2-1200ZE	0.66	—	0.68	—	0.80	—	ns
		MachXO2-2000ZE	0.68	—	0.70	—	0.83	—	ns
		MachXO2-4000ZE	0.68	—	0.71	—	0.84	—	ns
		MachXO2-7000ZE	0.73	—	0.74	—	0.87	—	ns
t_{SU_DELPLL}	Clock to Data Setup – PIO Input Register with Data Input Delay	MachXO2-1200ZE	5.14	—	5.69	—	6.20	—	ns
		MachXO2-2000ZE	5.11	—	5.67	—	6.17	—	ns
		MachXO2-4000ZE	5.27	—	5.84	—	6.35	—	ns
		MachXO2-7000ZE	5.15	—	5.71	—	6.23	—	ns
t_{H_DELPLL}	Clock to Data Hold – PIO Input Register with Input Data Delay	MachXO2-1200ZE	–1.36	—	–1.36	—	–1.36	—	ns
		MachXO2-2000ZE	–1.35	—	–1.35	—	–1.35	—	ns
		MachXO2-4000ZE	–1.43	—	–1.43	—	–1.43	—	ns
		MachXO2-7000ZE	–1.41	—	–1.41	—	–1.41	—	ns
Generic DDRX1 Inputs with Clock and Data Aligned at Pin Using PCLK Pin for Clock Input – GDDRX1_RX.SCLK.Aligned[9, 12]									
t_{DVA}	Input Data Valid After CLK	All MachXO2 devices, all sides	—	0.382	—	0.401	—	0.417	UI
t_{DVE}	Input Data Hold After CLK		0.670	—	0.684	—	0.693	—	UI
f_{DATA}	DDRX1 Input Data Speed		—	140	—	116	—	98	Mbps
f_{DDRX1}	DDRX1 SCLK Frequency		—	70	—	58	—	49	MHz
Generic DDRX1 Inputs with Clock and Data Centered at Pin Using PCLK Pin for Clock Input – GDDRX1_RX.SCLK.Centered[9, 12]									
t_{SU}	Input Data Setup Before CLK	All MachXO2 devices, all sides	1.319	—	1.412	—	1.462	—	ns
t_{HO}	Input Data Hold After CLK		0.717	—	1.010	—	1.340	—	ns
f_{DATA}	DDRX1 Input Data Speed		—	140	—	116	—	98	Mbps
f_{DDRX1}	DDRX1 SCLK Frequency		—	70	—	58	—	49	MHz
Generic DDRX2 Inputs with Clock and Data Aligned at Pin Using PCLK Pin for Clock Input – GDDRX2_RX.ECLK.Aligned[9, 12]									
t_{DVA}	Input Data Valid After CLK	MachXO2-640U, MachXO2-1200/U and larger devices, bottom side only[11]	—	0.361	—	0.346	—	0.334	UI
t_{DVE}	Input Data Hold After CLK		0.602	—	0.625	—	0.648	—	UI
f_{DATA}	DDRX2 Serial Input Data Speed		—	280	—	234	—	194	Mbps
f_{DDRX2}	DDRX2 ECLK Frequency		—	140	—	117	—	97	MHz
f_{SCLK}	SCLK Frequency		—	70	—	59	—	49	MHz
Generic DDRX2 Inputs with Clock and Data Centered at Pin Using PCLK Pin for Clock Input – GDDRX2_RX.ECLK.Centered[9, 12]									
t_{SU}	Input Data Setup Before CLK	MachXO2-640U, MachXO2-1200/U and larger devices, bottom side only[11]	0.472	—	0.672	—	0.865	—	ns
t_{HO}	Input Data Hold After CLK		0.363	—	0.501	—	0.743	—	ns
f_{DATA}	DDRX2 Serial Input Data Speed		—	280	—	234	—	194	Mbps
f_{DDRX2}	DDRX2 ECLK Frequency		—	140	—	117	—	97	MHz
f_{SCLK}	SCLK Frequency		—	70	—	59	—	49	MHz
Generic DDR4 Inputs with Clock and Data Aligned at Pin Using PCLK Pin for Clock Input - GDDRX4_RX.ECLK.Aligned[9, 12]									
t_{DVA}	Input Data Valid After ECLK	MachXO2-640U, MachXO2-1200/U and larger devices, bottom side only[11]	—	0.307	—	0.316	—	0.326	UI
t_{DVE}	Input Data Hold After ECLK		0.662	—	0.650	—	0.649	—	UI
f_{DATA}	DDRX4 Serial Input Data Speed		—	420	—	352	—	292	Mbps
f_{DDRX4}	DDRX4 ECLK Frequency		—	210	—	176	—	146	MHz
f_{SCLK}	SCLK Frequency		—	53	—	44	—	37	MHz

Parameter	Description	Device	–3		–2		–1		Units
			Min.	Max.	Min.	Max.	Min.	Max.	
Generic DDR4 Inputs with Clock and Data Centered at Pin Using PCLK Pin for Clock Input – GDDRX4_RX.ECLK.Centered[9, 12]									
t_{SU}	Input Data Setup Before ECLK	MachXO2-640U, MachXO2-1200/U and larger devices, bottom side only[11]	0.434	—	0.535	—	0.630	—	ns
t_{HO}	Input Data Hold After ECLK		0.385	—	0.395	—	0.463	—	ns
f_{DATA}	DDRX4 Serial Input Data Speed		—	420	—	352	—	292	Mbps
f_{DDRX4}	DDRX4 ECLK Frequency		—	210	—	176	—	146	MHz
f_{SCLK}	SCLK Frequency		—	53	—	44	—	37	MHz
7:1 LVDS Inputs – GDDR71_RX.ECLK.7.1[9, 12]									
t_{DVA}	Input Data Valid After ECLK	MachXO2-640U, MachXO2-1200/U and larger devices, bottom side only[11]	—	0.307	—	0.316	—	0.326	UI
t_{DVE}	Input Data Hold After ECLK		0.662	—	0.650	—	0.649	—	UI
f_{DATA}	DDR71 Serial Input Data Speed		—	420	—	352	—	292	Mbps
f_{DDR71}	DDR71 ECLK Frequency		—	210	—	176	—	146	MHz
f_{CLKIN}	7:1 Input Clock Frequency (SCLK) (minimum limited by PLL)		—	60	—	50	—	42	MHz
Generic DDR Outputs with Clock and Data Aligned at Pin Using PCLK Pin for Clock Input – GDDRX1_TX.SCLK.Aligned[9, 12]									
t_{DIA}	Output Data Invalid After CLK Output	All MachXO2 devices, all sides	—	0.850	—	0.910	—	0.970	ns
t_{DIB}	Output Data Invalid Before CLK Output		—	0.850	—	0.910	—	0.970	ns
f_{DATA}	DDRX1 Output Data Speed		—	140	—	116	—	98	Mbps
f_{DDRX1}	DDRX1 SCLK frequency		—	70	—	58	—	49	MHz
Generic DDR Outputs with Clock and Data Centered at Pin Using PCLK Pin for Clock Input – GDDRX1_TX.SCLK.Centered[9, 12]									
t_{DVB}	Output Data Valid Before CLK Output	All MachXO2 devices, all sides	2.720	—	3.380	—	4.140	—	ns
t_{DVA}	Output Data Valid After CLK Output		2.720	—	3.380	—	4.140	—	ns
f_{DATA}	DDRX1 Output Data Speed		—	140	—	116	—	98	Mbps
f_{DDRX1}	DDRX1 SCLK Frequency (minimum limited by PLL)		—	70	—	58	—	49	MHz
Generic DDRX2 Outputs with Clock and Data Aligned at Pin Using PCLK Pin for Clock Input – GDDRX2_TX.ECLK.Aligned[9, 12]									
t_{DIA}	Output Data Invalid After CLK Output	MachXO2-640U, MachXO2-1200/U and larger devices, top side only	—	0.270	—	0.300	—	0.330	ns
t_{DIB}	Output Data Invalid Before CLK Output		—	0.270	—	0.300	—	0.330	ns
f_{DATA}	DDRX2 Serial Output Data Speed		—	280	—	234	—	194	Mbps
f_{DDRX2}	DDRX2 ECLK frequency		—	140	—	117	—	97	MHz
f_{SCLK}	SCLK Frequency		—	70	—	59	—	49	MHz

Parameter	Description	Device	–3		–2		–1		Units
			Min.	Max.	Min.	Max.	Min.	Max.	
Generic DDRX2 Outputs with Clock and Data Centered at Pin Using PCLK Pin for Clock Input – GDDRX2_TX.ECLK.Centered[9, 12]									
t_{DVB}	Output Data Valid Before CLK Output	MachXO2-640U, MachXO2-1200/U and larger devices, top side only	1.445	—	1.760	—	2.140	—	ns
t_{DVA}	Output Data Valid After CLK Output		1.445	—	1.760	—	2.140	—	ns
f_{DATA}	DDRX2 Serial Output Data Speed		—	280	—	234	—	194	Mbps
f_{DDRX2}	DDRX2 ECLK Frequency (minimum limited by PLL)		—	140	—	117	—	97	MHz
f_{SCLK}	SCLK Frequency		—	70	—	59	—	49	MHz
Generic DDRX4 Outputs with Clock and Data Aligned at Pin Using PCLK Pin for Clock Input – GDDRX4_TX.ECLK.Aligned[9, 12]									
t_{DIA}	Output Data Invalid After CLK Output	MachXO2-640U, MachXO2-1200/U and larger devices, top side only	—	0.270	—	0.300	—	0.330	ns
t_{DIB}	Output Data Invalid Before CLK Output		—	0.270	—	0.300	—	0.330	ns
f_{DATA}	DDRX4 Serial Output Data Speed		—	420	—	352	—	292	Mbps
f_{DDRX4}	DDRX4 ECLK Frequency		—	210	—	176	—	146	MHz
f_{SCLK}	SCLK Frequency		—	53	—	44	—	37	MHz
Generic DDRX4 Outputs with Clock and Data Centered at Pin Using PCLK Pin for Clock Input – GDDRX4_TX.ECLK.Centered[9, 12]									
t_{DVB}	Output Data Valid Before CLK Output	MachXO2-640U, MachXO2-1200/U and larger devices, top side only	0.873	—	1.067	—	1.319	—	ns
t_{DVA}	Output Data Valid After CLK Output		0.873	—	1.067	—	1.319	—	ns
f_{DATA}	DDRX4 Serial Output Data Speed		—	420	—	352	—	292	Mbps
f_{DDRX4}	DDRX4 ECLK Frequency (minimum limited by PLL)		—	210	—	176	—	146	MHz
f_{SCLK}	SCLK Frequency		—	53	—	44	—	37	MHz
7:1 LVDS Outputs – GDDR71_TX.ECLK.7:1[9, 12]									
t_{DIB}	Output Data Invalid Before CLK Output	MachXO2-640U, MachXO2-1200/U and larger devices, top side only.	—	0.240	—	0.270	—	0.300	ns
t_{DIA}	Output Data Invalid After CLK Output		—	0.240	—	0.270	—	0.300	ns
f_{DATA}	DDR71 Serial Output Data Speed		—	420	—	352	—	292	Mbps
f_{DDR71}	DDR71 ECLK Frequency		—	210	—	176	—	146	MHz
f_{CLKOUT}	7:1 Output Clock Frequency (SCLK) (minimum limited by PLL)		—	60	—	50	—	42	MHz

MachXO2 Oscillator Output Frequency

Symbol	Parameter	Min.	Typ.	Max	Units
f_{MAX}	Oscillator Output Frequency (Commercial Grade Devices, 0 to 85°C)	125.685	133	140.315	MHz
	Oscillator Output Frequency (Industrial Grade Devices, –40 °C to 100 °C)	124.355	133	141.645	MHz
t_{DT}	Output Clock Duty Cycle	43	50	57	%
t_{OPJIT}[1]	Output Clock Period Jitter	0.01	0.012	0.02	UIPP
$t_{STABLEOSC}$	STDBY Low to Oscillator Stable	0.01	0.05	0.1	µs

1. Output Clock Period Jitter specified at 133 MHz. The values for lower frequencies will be smaller UIPP. The typical value for 133 MHz is 95 ps and for 2.08 MHz the typical value is 1.54 ns.

MachXO2 Standby Mode Timing – HC/HE Devices

Symbol	Parameter	Device	Min.	Typ.	Max	Units
t_{PWRDN}	USERSTDBY High to Stop	All	—	—	9	ns
t_{PWRUP}	USERSTDBY Low to Power Up	LCMXO2-256		—		µs
		LCMXO2-640		—		µs
		LCMXO2-640U		—		µs
		LCMXO2-1200	20	—	50	µs
		LCMXO2-1200U		—		µs
		LCMXO2-2000		—		µs
		LCMXO2-2000U		—		µs
		LCMXO2-4000		—		µs
		LCMXO2-7000		—		µs
t_{WSTDBY}	USERSTDBY Pulse Width	All	18	—	—	ns

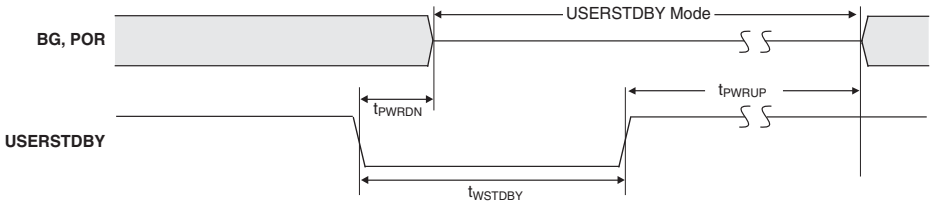

MachXO2 Standby Mode Timing – ZE Devices

Symbol	Parameter	Device	Min.	Typ.	Max	Units
t_{PWRDN}	USERSTDBY High to Stop	All	—	—	13	ns
t_{PWRUP}	USERSTDBY Low to Power Up	LCMXO2-256		—		µs
		LCMXO2-640		—		µs
		LCMXO2-1200	20	—	50	µs
		LCMXO2-2000		—		µs
		LCMXO2-4000		—		µs
		LCMXO2-7000		—		µs
t_{WSTDBY}	USERSTDBY Pulse Width	All	19	—	—	ns
$t_{BNDGAPSTBL}$	USERSTDBY High to Bandgap Stable	All	—	—	15	ns

I²C Port Timing Specifications[1, 2]

Symbol	Parameter	Min.	Max.	Units
f_{MAX}	Maximum SCL clock frequency	—	400	kHz

1. MachXO2 supports the following modes:
   - Standard-mode (Sm), with a bit rate up to 100 kbit/s (user and configuration mode)
   - Fast-mode (Fm), with a bit rate up to 400 kbit/s (user and configuration mode)
2. Refer to the I²C specification for timing requirements.

SPI Port Timing Specifications[1]

Symbol	Parameter	Min.	Max.	Units
f_{MAX}	Maximum SCK clock frequency	—	45	MHz

1. Applies to user mode only. For configuration mode timing specifications, refer to sysCONFIG Port Timing Specifications table in this data sheet.

Switching Test Conditions

Figure 3-13 shows the output test load used for AC testing. The specific values for resistance, capacitance, voltage, and other test conditions are shown in Table 3-5.

Figure 3-13. Output Test Load, LVTTL and LVCMOS Standards

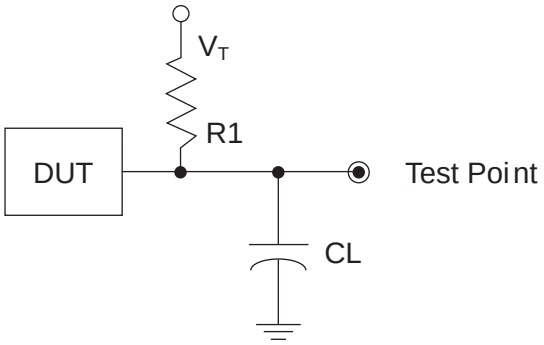

Table 3-5. Test Fixture Required Components, Non-Terminated Interfaces

Test Condition	R1	CL	Timing Ref.	VT
LVTTL and LVCMOS settings (L -> H, H -> L)	∞	0pF	LVTTL, LVCMOS 3.3 = 1.5 V	—
			LVCMOS 2.5 = $V_{CCIO}/2$	—
			LVCMOS 1.8 = $V_{CCIO}/2$	—
			LVCMOS 1.5 = $V_{CCIO}/2$	—
			LVCMOS 1.2 = $V_{CCIO}/2$	—
LVTTL and LVCMOS 3.3 (Z -> H)	188	0pF	1.5 V	V_{OL}
LVTTL and LVCMOS 3.3 (Z -> L)			1.5 V	V_{OH}
Other LVCMOS (Z -> H)			$V_{CCIO}/2$	V_{OL}
Other LVCMOS (Z -> L)			$V_{CCIO}/2$	V_{OH}
LVTTL + LVCMOS (H -> Z)			V_{OH} – 0.15 V	V_{OL}
LVTTL + LVCMOS (L -> Z)			V_{OL} – 0.15 V	V_{OH}

Note: Output test conditions for all other interfaces are determined by the respective standards.

Part Number	LUTs	Supply Voltage	Grade	Package	Leads	Temp.
LCMXO2-2000UHC-4FG484C	2112	2.5 V / 3.3 V	–4	Halogen-Free fpBGA	484	COM
LCMXO2-2000UHC-5FG484C	2112	2.5 V / 3.3 V	–5	Halogen-Free fpBGA	484	COM
LCMXO2-2000UHC-6FG484C	2112	2.5 V / 3.3 V	–6	Halogen-Free fpBGA	484	COM

Part Number	LUTs	Supply Voltage	Grade	Package	Leads	Temp.
LCMXO2-4000HC-4QN84C	4320	2.5 V / 3.3 V	–4	Halogen-Free QFN	84	COM
LCMXO2-4000HC-5QN84C	4320	2.5 V / 3.3 V	–5	Halogen-Free QFN	84	COM
LCMXO2-4000HC-6QN84C	4320	2.5 V / 3.3 V	–6	Halogen-Free QFN	84	COM
LCMXO2-4000HC-4MG132C	4320	2.5 V / 3.3 V	–4	Halogen-Free csBGA	132	COM
LCMXO2-4000HC-5MG132C	4320	2.5 V / 3.3 V	–5	Halogen-Free csBGA	132	COM
LCMXO2-4000HC-6MG132C	4320	2.5 V / 3.3 V	–6	Halogen-Free csBGA	132	COM
LCMXO2-4000HC-4TG144C	4320	2.5 V / 3.3 V	–4	Halogen-Free TQFP	144	COM
LCMXO2-4000HC-5TG144C	4320	2.5 V / 3.3 V	–5	Halogen-Free TQFP	144	COM
LCMXO2-4000HC-6TG144C	4320	2.5 V / 3.3 V	–6	Halogen-Free TQFP	144	COM
LCMXO2-4000HC-4BG256C	4320	2.5 V / 3.3 V	–4	Halogen-Free caBGA	256	COM
LCMXO2-4000HC-5BG256C	4320	2.5 V / 3.3 V	–5	Halogen-Free caBGA	256	COM
LCMXO2-4000HC-6BG256C	4320	2.5 V / 3.3 V	–6	Halogen-Free caBGA	256	COM
LCMXO2-4000HC-4FTG256C	4320	2.5 V / 3.3 V	–4	Halogen-Free ftBGA	256	COM
LCMXO2-4000HC-5FTG256C	4320	2.5 V / 3.3 V	–5	Halogen-Free ftBGA	256	COM
LCMXO2-4000HC-6FTG256C	4320	2.5 V / 3.3 V	–6	Halogen-Free ftBGA	256	COM
LCMXO2-4000HC-4BG332C	4320	2.5 V / 3.3 V	–4	Halogen-Free caBGA	332	COM
LCMXO2-4000HC-5BG332C	4320	2.5 V / 3.3 V	–5	Halogen-Free caBGA	332	COM
LCMXO2-4000HC-6BG332C	4320	2.5 V / 3.3 V	–6	Halogen-Free caBGA	332	COM
LCMXO2-4000HC-4FG484C	4320	2.5 V / 3.3 V	–4	Halogen-Free fpBGA	484	COM
LCMXO2-4000HC-5FG484C	4320	2.5 V / 3.3 V	–5	Halogen-Free fpBGA	484	COM
LCMXO2-4000HC-6FG484C	4320	2.5 V / 3.3 V	–6	Halogen-Free fpBGA	484	COM

High-Performance Industrial Grade Devices with Voltage Regulator, Halogen Free (RoHS) Packaging

Part Number	LUTs	Supply Voltage	Grade	Package	Leads	Temp.
LCMXO2-256HC-4SG32I	256	2.5 V / 3.3 V	–4	Halogen-Free QFN	32	IND
LCMXO2-256HC-5SG32I	256	2.5 V / 3.3 V	–5	Halogen-Free QFN	32	IND
LCMXO2-256HC-6SG32I	256	2.5 V / 3.3 V	–6	Halogen-Free QFN	32	IND
LCMXO2-256HC-4SG48I	256	2.5 V / 3.3 V	–4	Halogen-Free QFN	48	IND
LCMXO2-256HC-5SG48I	256	2.5 V / 3.3 V	–5	Halogen-Free QFN	48	IND
LCMXO2-256HC-6SG48I	256	2.5 V / 3.3 V	–6	Halogen-Free QFN	48	IND
LCMXO2-256HC-4UMG64I	256	2.5 V / 3.3 V	–4	Halogen-Free ucBGA	64	IND
LCMXO2-256HC-5UMG64I	256	2.5 V / 3.3 V	–5	Halogen-Free ucBGA	64	IND
LCMXO2-256HC-6UMG64I	256	2.5 V / 3.3 V	–6	Halogen-Free ucBGA	64	IND
LCMXO2-256HC-4TG100I	256	2.5 V / 3.3 V	–4	Halogen-Free TQFP	100	IND
LCMXO2-256HC-5TG100I	256	2.5 V / 3.3 V	–5	Halogen-Free TQFP	100	IND
LCMXO2-256HC-6TG100I	256	2.5 V / 3.3 V	–6	Halogen-Free TQFP	100	IND
LCMXO2-256HC-4MG132I	256	2.5 V / 3.3 V	–4	Halogen-Free csBGA	132	IND
LCMXO2-256HC-5MG132I	256	2.5 V / 3.3 V	–5	Halogen-Free csBGA	132	IND
LCMXO2-256HC-6MG132I	256	2.5 V / 3.3 V	–6	Halogen-Free csBGA	132	IND

Part Number	LUTs	Supply Voltage	Grade	Package	Leads	Temp.
LCMXO2-640HC-4SG48I	640	2.5 V / 3.3 V	–4	Halogen-Free QFN	48	IND
LCMXO2-640HC-5SG48I	640	2.5 V / 3.3 V	–5	Halogen-Free QFN	48	IND
LCMXO2-640HC-6SG48I	640	2.5 V / 3.3 V	–6	Halogen-Free QFN	48	IND
LCMXO2-640HC-4TG100I	640	2.5 V / 3.3 V	–4	Halogen-Free TQFP	100	IND
LCMXO2-640HC-5TG100I	640	2.5 V / 3.3 V	–5	Halogen-Free TQFP	100	IND
LCMXO2-640HC-6TG100I	640	2.5 V / 3.3 V	–6	Halogen-Free TQFP	100	IND
LCMXO2-640HC-4MG132I	640	2.5 V / 3.3 V	–4	Halogen-Free csBGA	132	IND
LCMXO2-640HC-5MG132I	640	2.5 V / 3.3 V	–5	Halogen-Free csBGA	132	IND
LCMXO2-640HC-6MG132I	640	2.5 V / 3.3 V	–6	Halogen-Free csBGA	132	IND

Part Number	LUTs	Supply Voltage	Grade	Package	Leads	Temp.
LCMXO2-640UHC-4TG144I	640	2.5 V / 3.3 V	–4	Halogen-Free TQFP	144	IND
LCMXO2-640UHC-5TG144I	640	2.5 V / 3.3 V	–5	Halogen-Free TQFP	144	IND
LCMXO2-640UHC-6TG144I	640	2.5 V / 3.3 V	–6	Halogen-Free TQFP	144	IND

MachXO2 Family Data Sheet Revision History

Date	Version	Section	Change Summary
March 2017	3.3	DC and Switching Characteristics	Updated the Absolute Maximum Ratings section. Added standards.
			Updated the sysIO Recommended Operating Conditions section. Added standards.
			Updated the sysIO Single-Ended DC Electrical Characteristics section. Added standards.
			Updated the MachXO2 External Switching Characteristics – HC/HE Devices section. Under 7:1 LVDS Outputs – GDDR71_TX.ECLK.7:1, the D_{VB} and the D_{VA} parameters were changed to D_{IB} and $D_{IA.}$ The parameter descriptions were also modified.
			Updated the MachXO2 External Switching Characteristics – ZE Devices section. Under 7:1 LVDS Outputs – GDDR71_TX.ECLK.7:1, the D_{VB} and the D_{VA} parameters were changed to D_{IB} and $D_{IA.}$ The parameter descriptions were also modified.
			Updated the sysCONFIG Port Timing Specifications section. Corrected the t_{INITL} units from ns to µs.
		Pinout Information	Updated the Signal Descriptions section. Revised the descriptions of the PROGRAMN, INITN, and DONE signals.
			Updated the Pinout Information Summary section. Added footnote to MachXO2-1200 32 QFN.
		Ordering Information	Updated the MachXO2 Part Number Description section. Corrected the MG184, BG256, FTG256 package information. Added “(0.8 mm Pitch)” to BG332.
			Updated the Ultra Low Power Industrial Grade Devices, Halogen Free (RoHS) Packaging section. — Updated LCMXO2-1200ZE-1UWG25ITR50 footnote. — Corrected footnote numbering typo. — Added the LCMXO2-2000ZE-1UWG49ITR50 and LCMXO2-2000ZE-1UWG49ITR1K part numbers. Updated/added footnote/s.

© 2016 Lattice Semiconductor Corp. All Lattice trademarks, registered trademarks, patents, and disclaimers are as listed at www.latticesemi.com/legal. All other brand or product names are trademarks or registered trademarks of their respective holders. The specifications and information herein are subject to change without notice.