onsemi - LC87F1L16AUWA-2H Datasheet

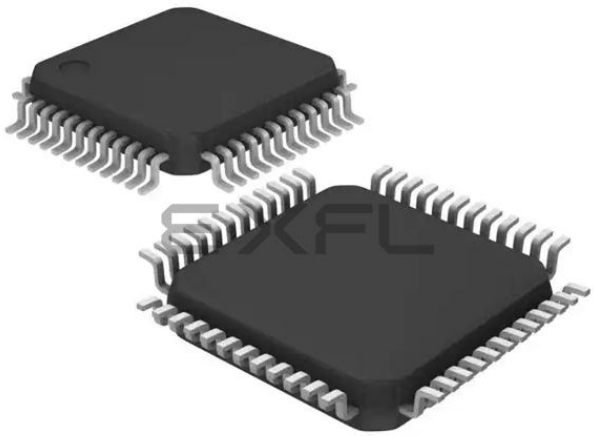

Welcome to E-XFL.COM

What is "Embedded - Microcontrollers"?

"Embedded - Microcontrollers" refer to small, integrated circuits designed to perform specific tasks within larger systems. These microcontrollers are essentially compact computers on a single chip, containing a processor core, memory, and programmable input/output peripherals. They are called "embedded" because they are embedded within electronic devices to control various functions, rather than serving as standalone computers. Microcontrollers are crucial in modern electronics, providing the intelligence and control needed for a wide range of applications.

Applications of "Embedded - Microcontrollers"

Details	
Product Status	Active
Core Processor	-
Core Size	8-Bit
Speed	12MHz
Connectivity	SIO, UART/USART, USB
Peripherals	PWM, WDT
Number of I/O	34
Program Memory Size	16KB (16K x 8)
Program Memory Type	FLASH
EEPROM Size	-
RAM Size	2K x 8
Voltage - Supply (Vcc/Vdd)	2.7V ~ 5.5V
Data Converters	A/D 12x12b
Oscillator Type	Internal
Operating Temperature	-40°C ~ 85°C (TA)
Mounting Type	Surface Mount
Package / Case	48-LQFP
Supplier Device Package	48-SQFP (7x7)
Purchase URL	https://www.e-xfl.com/product-detail/onsemi/lc87f1l16auwa-2h

■Bus Cycle Time
- 83.3ns (When CF=12MHz)
  Note: The bus cycle time here refers to the ROM read speed.

■Minimum Instruction Cycle Time (tCYC)
- 250ns (When CF=12MHz)

■Ports
- I/O ports
  Ports whose I/O direction can be designated in 1-bit units 26 (P10 to P17, P20 to P25, P30 to P34, P70 to P73, PWM0, PWM1, XT2)
  Ports whose I/O direction can be designated in 4-bit units 8 (P00 to P07)
- USB ports 2 (UHAD+, UHAD-, UHBD+, UHBD-)
- Dedicated oscillator ports 2 (CF1, CF2)
- Input-only port (also used for oscillation) 1 (XT1)
- Reset pins 1 ($\overline{RES}$)
- Power supply pins 6 (V_{SS}1 to 3, V_{DD}1 to 3)

■Timers
- Timer 0: 16-bit timer/counter with 2 capture registers.
  Mode 0: 8-bit timer with an 8-bit programmable prescaler (with two 8-bit capture registers) × 2 channels
  Mode 1: 8-bit timer with an 8-bit programmable prescaler (with two 8-bit capture registers) + 8-bit counter (with two 8-bit capture registers)
  Mode 2: 16-bit timer with an 8-bit programmable prescaler (with two 16-bit capture registers)
  Mode 3: 16-bit counter (with two 16-bit capture registers)
- Timer 1: 16-bit timer/counter that supports PWM/toggle outputs
  Mode 0: 8-bit timer with an 8-bit prescaler (with toggle outputs) + 8-bit timer/counter with an 8-bit prescaler (with toggle outputs)
  Mode 1: 8-bit PWM with an 8-bit prescaler × 2 channels
  Mode 2: 16-bit timer/counter with an 8-bit prescaler (with toggle outputs) (toggle outputs also possible from lower-order 8 bits)
  Mode 3: 16-bit timer with an 8-bit prescaler (with toggle outputs) (lower-order 8 bits may be used as a PWM output)
- Timer 4: 8-bit timer with a 6-bit prescaler
- Timer 5: 8-bit timer with a 6-bit prescaler
- Timer 6: 8-bit timer with a 6-bit prescaler (with toggle outputs)
- Timer 7: 8-bit timer with a 6-bit prescaler (with toggle outputs)
- Base timer
  1) The clock is selectable from the subclock (32.768kHz crystal oscillation), system clock, and timer 0 prescaler output.
  2) Interrupts programmable in 5 different time schemes

■SIO
- SIO0: Synchronous serial interface
  1) LSB first/MSB first mode selectable
  2) Transfer clock cycle: 4/3 to 512/3 tCYC
  3) Automatic continuous data transmission (1 to 256 bits, specifiable in 1-bit units) (Suspension and resumption of data transmission possible in 1 byte units)
- SIO1: 8-bit asynchronous/synchronous serial interface
  Mode 0: Synchronous 8-bit serial I/O (2- or 3-wire configuration, 2 to 512 tCYC transfer clocks)
  Mode 1: Asynchronous serial I/O (half-duplex, 8 data bits, 1 stop bit, 8 to 2048 tCYC baudrates)
  Mode 2: Bus mode 1 (start bit, 8 data bits, 2 to 512 tCYC transfer clocks)
  Mode 3: Bus mode 2 (start detect, 8 data bits, stop detect)

■Full Duplex UART
1) Data length: 7/8/9 bits selectable
2) Stop bits: 1 bit (2 bits in continuous transmission mode)
3) Baud rate: 16/3 to 8192/3 tCYC

■AD Converter: 12 bits × 12 channels

■PWM: Multifrequency 12-bit PWM × 2 channels

■USB Interface (host control function) × 2 channels
1) Compliant with full-speed (12M bps) specifications
2) Supports 4 transfer types (control transfer, bulk transfer, interrupt transfer, and isochronous transfer).

■Watchdog Timer
- Watchdog timer using external RC circuitry
- Interrupt and reset signals selectable

■Clock Output Function
1) Can output a clock with a clock rate of 1/1, 1/2, 1/4, 1/8, 1/16, 1/32, or 1/64 of the source oscillator clock selected as the system clock.
2) Can output the source oscillation clock for the subclock.

■Interrupts
- 39 sources, 10 vector addresses

1) Provides three levels (low (L), high (H), and highest (X)) of multiplex interrupt control. Any interrupt requests of the level equal to or lower than the current interrupt are not accepted.
2) When interrupt requests to two or more vector addresses occur at the same time, the interrupt of the highest level takes precedence over the other interrupts. For interrupts of the same level, the interrupt into the smallest vector address takes precedence.

No.	Vector Address	Level	Interrupt Source
1	00003H	X or L	INT0
2	0000BH	X or L	INT1
3	00013H	H or L	INT2/T0L/INT4/UHC-A bus active/UHC-B bus active
4	0001BH	H or L	INT3/INT5/Base timer
5	00023H	H or L	T0H/INT6/UHC-A device connected/UHC-A disconnected/UHC-A resume
6	0002BH	H or L	T1L/T1H/INT7/UHC-B device connected/UHC-B disconnected/UHC-B resume
7	00033H	H or L	SIO0/UART1 receive complete
8	0003BH	H or L	SIO1/UART1 buffer empty/UART1 transmit complete
9	00043H	H or L	ADC/T6/T7/UHC-ACK/UHC-NAK/UHC error/UHC STALL
10	0004BH	H or L	Port 0/PWM0/PWM1/T4/T5/UHC-SOF

- Priority levels X > H > L
- Of interrupts of the same level, the one with the smallest vector address takes precedence.

■Subroutine Stack Levels: 1024 levels maximum (The stack is allocated in RAM.)

■High-speed Multiplication/Division Instructions
- 16 bits × 8 bits (5 tCYC execution time)
- 24 bits × 16 bits (12 tCYC execution time)
- 16 bits ÷ 8 bits (8 tCYC execution time)
- 24 bits ÷ 16 bits (12 tCYC execution time)

■Oscillation and PLL Circuits
- RC oscillation circuit (internal): For system clock
- CF oscillation circuit: For system clock
- Crystal oscillation circuit: For system clock, time-of-day clock
- PLL circuit (internal): For USB interface (see Fig.5)

Pin Assignment

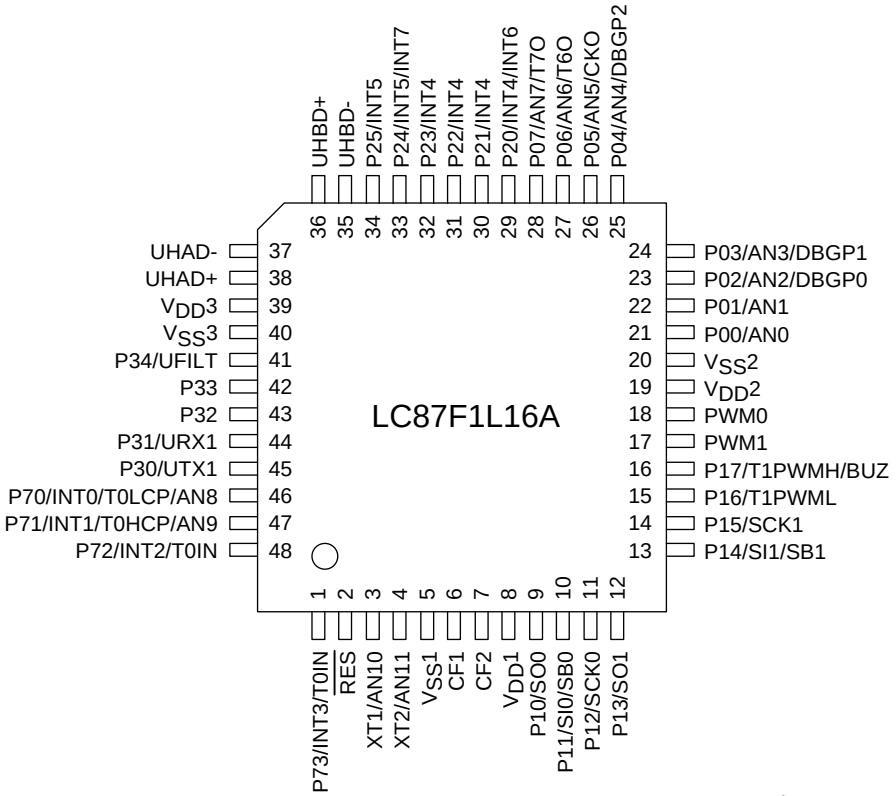

SQFP48(7×7) “Lead-/Halogen-free Type”

SQFP48	NAME
1	P73/INT3/T0IN
2	$\overline{\text{RES}}$
3	XT1/AN10
4	XT2/AN11
5	$V_{SS}1$
6	CF1
7	CF2
8	$V_{DD}1$
9	P10/SO0
10	P11/SI0/SB0
11	P12/SCK0
12	P13/SO1
13	P14/SI1/SB1
14	P15/SCK1
15	P16/T1PWML
16	P17/T1PWMH/BUZ
17	PWM1
18	PWM0
19	$V_{DD}2$
20	$V_{SS}2$
21	P00/AN0
22	P01/AN1
23	P02/AN2/DBGP0
24	P03/AN3/DBGP1

SQFP48	NAME
25	P04/AN4/DBGP2
26	P05/AN5/CKO
27	P06/AN6/T6O
28	P07/AN7/T7O
29	P20/INT4/INT6
30	P21/INT4
31	P22/INT4
32	P23/INT4
33	P24/INT5/INT7
34	P25/INT5
35	UHBD-
36	UHBD+
37	UHAD-
38	UHAD+
39	$V_{DD}3$
40	$V_{SS}3$
41	P34/UFILT
42	P33
43	P32
44	P31/URX1
45	P30/UTX1
46	P70/INT0/T0LCP/AN8
47	P71/INT1/T0HCP/AN9
48	P72/INT2/T0IN

System Block Diagram

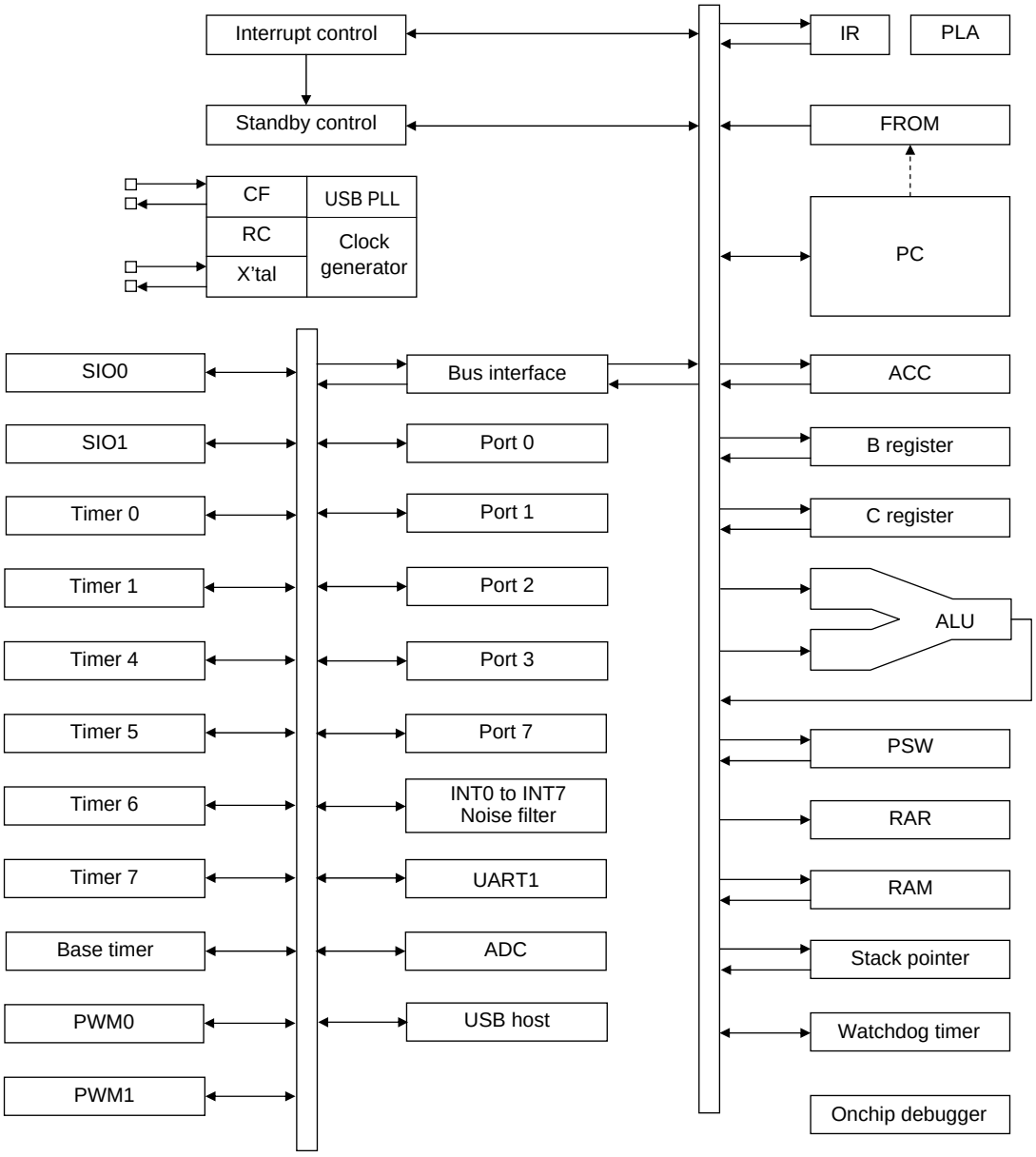

Pin Description

<table>
<tr><th>Pin Name</th><th>I/O</th><th>Description</th><th>Option</th></tr>
<tr><td>$V_{SS}1$,$V_{SS}2$,
$V_{SS}3$</td><td>-</td><td>- power supply</td><td>No</td></tr>
<tr><td>$V_{DD}1$, $V_{DD}2$</td><td>-</td><td>+ power supply</td><td>No</td></tr>
<tr><td>$V_{DD}3$</td><td>-</td><td>USB reference voltage</td><td>Yes</td></tr>
<tr><td>Port 0
P00 to P07</td><td>I/O</td><td>• 8-bit I/O ports
• I/O specifiable in 4-bit units
• Pull-up resistors can be turned on and off in 4-bit units.
• HOLD reset input
• Port 0 interrupt input
• Pin functions
AD converter input ports: AN0 to AN7(P00 to P07)
Onchip debugger pins: DBGP0 to DBGP2(P02 to P04)
P05: System clock output
P06: Timer 6 toggle output
P07: Timer 7 toggle output</td><td>Yes</td></tr>
<tr><td>Port 1
P10 to P17</td><td>I/O</td><td>• 8-bit I/O ports
• I/O specifiable in 1-bit units
• Pull-up resistors can be turned on and off in 1-bit units.
• Pin functions
P10: SIO0 data output
P11: SIO0 data input/bus input/output
P12: SIO0 clock input/output
P13: SIO1 data output
P14: SIO1 data input/bus input/output
P15: SIO1 clock input/output
P16: Timer 1 PWML output
P17: Timer 1 PWMH output/beeper output</td><td>Yes</td></tr>
<tr><td>Port 2
P20 to P25</td><td>I/O</td><td>• 6-bit I/O ports
• I/O specifiable in 1-bit units
• Pull-up resistors can be turned on and off in 1-bit units.
• Pin functions
P20 to P23: INT4 input/HOLD reset input/timer 1 event input/timer 0L capture input/
timer 0H capture input
P24 to P27: INT5 input/HOLD reset input/timer 1 event input/timer 0L capture input/
timer 0H capture input
P20: INT6 input/timer 0L capture 1 input
P24: INT7 input/timer 0H capture 1 input
Interrupt acknowledge types
<table>
<tr><th></th><th>Rising</th><th>Falling</th><th>Rising & Falling</th><th>H level</th><th>L level</th></tr>
<tr><td>INT4</td><td>enable</td><td>enable</td><td>enable</td><td>disable</td><td>disable</td></tr>
<tr><td>INT5</td><td>enable</td><td>enable</td><td>enable</td><td>disable</td><td>disable</td></tr>
<tr><td>INT6</td><td>enable</td><td>enable</td><td>enable</td><td>disable</td><td>disable</td></tr>
<tr><td>INT7</td><td>enable</td><td>enable</td><td>enable</td><td>disable</td><td>disable</td></tr>
</table></td><td>Yes</td></tr>
<tr><td>Port 3
P30 to P34</td><td>I/O</td><td>• 5-bit I/O ports
• I/O specifiable in 1-bit units
• Pull-up resistors can be turned on and off in 1-bit units.
• Pin functions
P30: UART1 transmit
P31: UART1 receive
P34: USB interface PLL filter pin (see Fig. 5.)</td><td>Yes</td></tr>
</table>

Continued on next page.

Continued from preceding page.

<table>
<tr><th>Pin Name</th><th>I/O</th><th>Description</th><th>Option</th></tr>
<tr><td>Port 7
P70 to P73</td><td>I/O</td><td>• 4-bit I/O port
• I/O specifiable in 1-bit units
• Pull-up resistors can be turned on and off in 1-bit units.
• Pin functions
P70: INT0 input/HOLD reset input/timer 0L capture input/watchdog timer output
P71: INT1 input/HOLD reset input/timer 0H capture input
P72: INT2 input/HOLD reset input/timer 0 event input/timer 0L capture input/
high speed clock counter input
P73: INT3 input (input with noise filter)/timer 0 event input/timer 0H capture input
AD converter input ports: AN8(P70), AN9(P71)
Interrupt acknowledge types
<table>
<tr><th></th><th>Rising</th><th>Falling</th><th>Rising & Falling</th><th>H level</th><th>L level</th></tr>
<tr><td>INT0</td><td>enable</td><td>enable</td><td>disable</td><td>enable</td><td>enable</td></tr>
<tr><td>INT1</td><td>enable</td><td>enable</td><td>disable</td><td>enable</td><td>enable</td></tr>
<tr><td>INT2</td><td>enable</td><td>enable</td><td>enable</td><td>disable</td><td>disable</td></tr>
<tr><td>INT3</td><td>enable</td><td>enable</td><td>enable</td><td>disable</td><td>disable</td></tr>
</table></td><td>No</td></tr>
<tr><td>PWM0
PWM1</td><td>I/O</td><td>PWM0, PWM1 output port
General-purpose input port</td><td>No</td></tr>
<tr><td>UHAD-
UHAD+</td><td>I/O</td><td>USB-A port data I/O pin/general-purpose I/O port</td><td>No</td></tr>
<tr><td>UHBD-
UHBD+</td><td>I/O</td><td>USB-B port data I/O pin/general-purpose I/O port</td><td>No</td></tr>
<tr><td>$\overline{RES}$</td><td>Input</td><td>Reset pin</td><td>No</td></tr>
<tr><td>XT1</td><td>Input</td><td>• 32.768kHz crystal oscillator input
• Pin functions
General-purpose input port
AD converter input ports: AN10
Must be connected to $V_{DD}1$ when not to be used.</td><td>No</td></tr>
<tr><td>XT2</td><td>I/O</td><td>• 32.768kHz crystal oscillator output
• Pin functions
General-purpose I/O
AD converter input port: AN11
Must be set for oscillation and kept open if not to be used.</td><td>No</td></tr>
<tr><td>CF1</td><td>Input</td><td>Ceramic/crystal resonator input</td><td>No</td></tr>
<tr><td>CF2</td><td>Output</td><td>Ceramic/crystal resonator output</td><td>No</td></tr>
</table>

On-chip Debugger Pin Connection Requirements

For the treatment of the on-chip debugger pins, refer to the separately available documents entitled “Rd87 On-chip Debugger Installation Manual”

Port Output Types

The table below lists the types of port outputs and the presence/absence of a pull-up resistor.
Data can be read into any input port even if it is in the output mode.

Port Name	Option selected in units of	Option type	Output type	Pull-up resistor
P00 to P07	1 bit	1	CMOS	Programmable (Note 1)
		2	Nch-open drain	No
P10 to P17 P20 to P25 P30 to P34	1 bit	1	CMOS	Programmable
		2	Nch-open drain	Programmable
P70	-	No	Nch-open drain	Programmable
P71 to P73	-	No	CMOS	Programmable
PWM0, PWM1	-	No	CMOS	No
UHAD+, UHAD- UHBD+, UHBD-	-	No	CMOS	No
XT1	-	No	Input only	No
XT2	-	No	32.768kHz crystal resonator output (N channel open drain when in general-purpose output mode)	No

Note 1: Programmable pull-up resistors for port 0 are controlled in 4 bit units (P00 to 03, P04 to 07).

User Option Table

Option Name	Option Type	Mask Version *1	Flash Version	Option Selected in Units of	Option Selection
Port output form	P00 to P07	enable	enable	1 bit	CMOS
					Nch-open drain
	P10 to P17	enable	enable	1 bit	CMOS
					Nch-open drain
	P20 to P25	enable	enable	1 bit	CMOS
					Nch-open drain
	P30 to P34	enable	enable	1 bit	CMOS
					Nch-open drain
Program start address	-	× *2	enable	-	00000h
					03E00h
USB Regulator	USB Regulator	enable	enable	-	USE
					NONUSE
	USB Regulator (at HOLD mode)	enable	enable	-	USE
					NONUSE
	USB Regulator (at HALT mode)	enable	enable	-	USE
					NONUSE
Main clock 8MHz selection	-	enable	enable	-	ENABLE
					DISABLE

*1: Mask option selection – No change possible after mask is completed.
*2: Program start address of the mask version is 00000h.

USB Reference Power Option

When a voltage 4.5 to 5.5V is supplied to $V_{DD}1$ and the internal USB reference voltage circuit is activated, the reference voltage for USB port output is generated. The active/inactive state of the reference voltage circuit can be switched by option select. The procedure for marking the option selection is described below.

		(1)	(2)	(3)	(4)
Option settings	USB regulator	USE	USE	USE	NONUSE
	USB regulator at HOLD mode	USE	NONUSE	NONUSE	NONUSE
	USB regulator at HALT mode	USE	NONUSE	USE	NONUSE
Reference voltage circuit state	Normal mode	active	active	active	inactive
	HOLD mode	active	inactive	inactive	inactive
	HALT mode	active	inactive	active	inactive

- When the USB reference voltage circuit is made inactive, the level of the reference voltage for USB port output is equal to $V_{DD}1$.
- Selection (2) or (3) can be used to set the reference voltage circuit inactive in HOLD or HALT mode.
- When the reference voltage circuit is activated, the current drain increases by approximately 100µA compared with when the reference voltage circuit is inactive.

Example 1: $V_{DD}1=V_{DD}2=3.3V$

- Inactivating the reference voltage circuit (selection (4)).
- Connecting $V_{DD}3$ to $V_{DD}1$ and $V_{DD}2$.

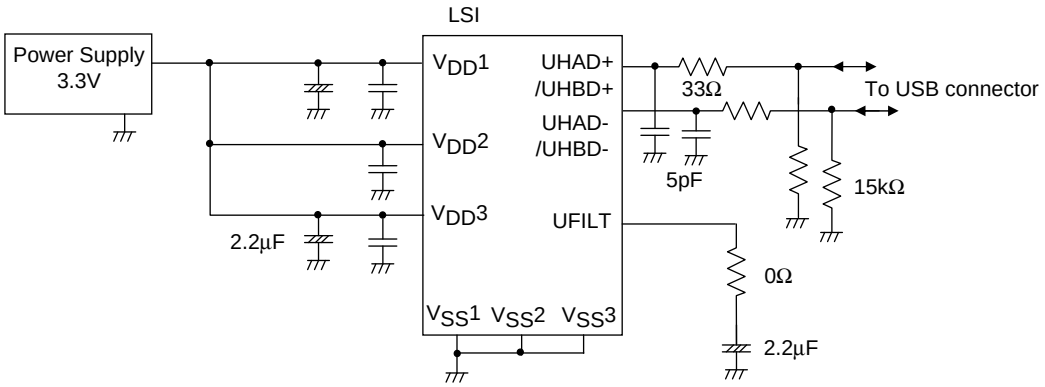

Example 2: $V_{DD}1=V_{DD}2=5.0V$

- Activating the reference voltage circuit (selection (1)).
- Isolating $V_{DD}3$ from $V_{DD}1$ and $V_{DD}2$, and connecting capacitor between $V_{DD}3$ and V_{SS}.

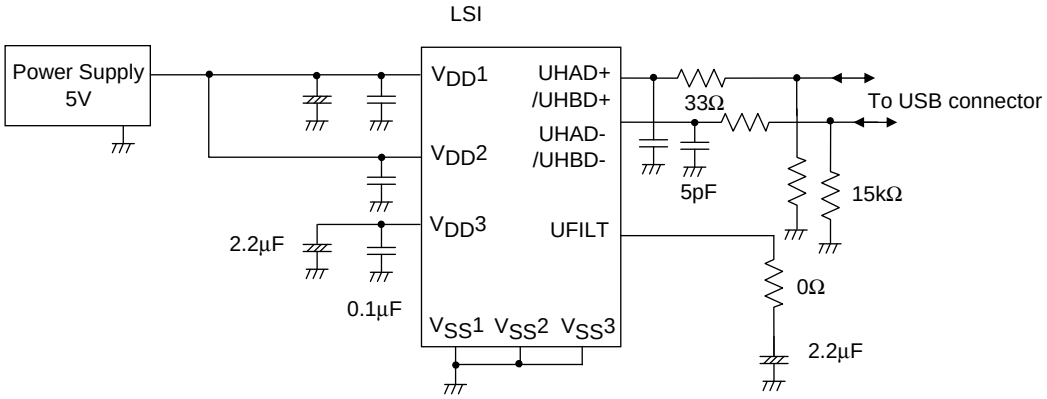

Note: Do not apply the voltage of more than 3.6V to UHAD+, UHAD-, UHBD+ and UHBD- when the reference voltage circuit is active.

Absolute Maximum Ratings at Ta = 25℃, $V_{SS1} = V_{SS2} = V_{SS3} = 0V$

Parameter		Symbol	Pin/Remarks	Conditions	V_{DD}[V]	Specification min	typ	max	unit
Maximum supply voltage		V_{DD} max	$V_{DD}1$, $V_{DD}2$, $V_{DD}3$	$V_{DD}1 = V_{DD}2 = V_{DD}3$		-0.3		+6.5	V
Input voltage		$V_I(1)$	XT1, CF1, $\overline{RES}$			-0.3		V_{DD}+0.3	V
Input/output voltage		$V_{IO}(1)$	Ports 0, 1, 2, 3, 7 PWM0, PWM1 XT2			-0.3		V_{DD}+0.3	V
High level output current	Peak output current	IOPH(1)	Ports 0, 1, 2	• When CMOS output type is selected • Per 1 applicable pin		-10			mA
		IOPH(2)	PWM0, PWM1	Per 1 applicable pin		-20			mA
		IOPH(3)	Port 3 P71 to P73	• When CMOS output type is selected • Per 1 applicable pin		-5			mA
	Average output current (Note 1-1)	IOMH(1)	Ports 0, 1, 2	• When CMOS output type is selected • Per 1 applicable pin		-7.5			mA
		IOMH(2)	PWM0, PWM1	Per 1 applicable pin		-15			mA
		IOMH(3)	Port 3 P71 to P73	• When CMOS output type is selected • Per 1 applicable pin		-3			mA
	Total output current	ΣIOAH(1)	Ports 0, 2	Total current of all applicable pins		-25			mA
		ΣIOAH(2)	Port 1 PWM0, PWM1	Total current of all applicable pins		-25			mA
		ΣIOAH(3)	Ports 0, 1, 2 PWM0, PWM1	Total current of all applicable pins		-45			mA
		ΣIOAH(4)	Port 3 P71 to P73	Total current of all applicable pins		-10			mA
		ΣIOAH(5)	UHAD+, UHAD- UHBD+, UHBD-	Total current of all applicable pins		-50			mA
Low level output current	Peak output current	IOPL(1)	P02 to P07 Ports 1, 2 PWM0, PWM1	Per 1 applicable pin				20	mA
		IOPL(2)	P00, P01	Per 1 applicable pin				30	mA
		IOPL(3)	Ports 3, 7 XT2	Per 1 applicable pin				10	mA
	Average output current (Note 1-1)	IOML(1)	P02 to P07 Ports 1, 2 PWM0, PWM1	Per 1 applicable pin				15	mA
		IOML(2)	P00, P01	Per 1 applicable pin				20	mA
		IOML(3)	Ports 3, 7 XT2	Per 1 applicable pin				7.5	mA
	Total output current	ΣIOAL(1)	Ports 0, 2	Total current of all applicable pins				45	mA
		ΣIOAL(2)	Port 1 PWM0, PWM1	Total current of all applicable pins				45	mA
		ΣIOAL(3)	Ports 0, 1, 2 PWM0, PWM1	Total current of all applicable pins				80	mA
		ΣIOAL(4)	Ports 3, 7 XT2	Total current of all applicable pins				15	mA
		ΣIOAL(5)	UHAD+, UHAD- UHBD+, UHBD-	Total current of all applicable pins				50	mA
Allowable power Dissipation		Pd max	SQFP48(7×7)	Ta=-40 to +85°C				140	mW
Operating ambient Temperature		Topr				-40		+85	°C
Storage ambient temperature		Tstg				-55		+125	°C

Note 1-1: The average output current is an average of current values measured over 100ms intervals.

Stresses exceeding Maximum Ratings may damage the device. Maximum Ratings are stress ratings only. Functional operation above the Recommended Operating Conditions is not implied. Extended exposure to stresses above the Recommended Operating Conditions may affect device reliability.

Electrical Characteristics at Ta = -40℃ to +85℃, $V_{SS1} = V_{SS2} = V_{SS3} = 0V$

Parameter	Symbol	Pin/Remarks	Conditions	V_{DD}[V]	Specification min	typ	max	unit
High level input current	$I_{IH}(1)$	Ports 0, 1, 2, 3 Port 7 $\overline{RES}$ PWM0, PWM1	Output disabled Pull-up resistor off $V_{IN}=V_{DD}$ (Including output Tr's off leakage current)	2.7 to 5.5			1	μA
	$I_{IH}(2)$	XT1, XT2	Input port configuration $V_{IN}=V_{DD}$	2.7 to 5.5			1	
	$I_{IH}(3)$	CF1	$V_{IN}=V_{DD}$	2.7 to 5.5			15	
Low level input current	$I_{IL}(1)$	Ports 0, 1, 2, 3 Port 7 $\overline{RES}$ PWM0, PWM1	Output disabled Pull-up resistor off $V_{IN}=V_{SS}$ (Including output Tr's off leakage current)	2.7 to 5.5	-1			
	$I_{IL}(2)$	XT1, XT2	Input port configuration $V_{IN}=V_{SS}$	2.7 to 5.5	-1			
	$I_{IL}(3)$	CF1	$V_{IN}=V_{SS}$	2.7 to 5.5	-15			
High level output voltage	$V_{OH}(1)$	Ports 0, 1, 2, 3 P71 to P73	I_{OH}=-1mA	4.5 to 5.5	V_{DD}-1			V
	$V_{OH}(2)$		I_{OH}=-0.4mA	3.0 to 5.5	V_{DD}-0.4			
	$V_{OH}(3)$		I_{OH}=-0.2mA	2.7 to 5.5	V_{DD}-0.4			
	$V_{OH}(4)$	PWM0, WM1 P05 (CKO when using system clock output function)	I_{OH}=-10mA	4.5 to 5.5	V_{DD}-1.5			
	$V_{OH}(5)$		I_{OH}=-1.6mA	3.0 to 5.5	V_{DD}-0.4			
	$V_{OH}(6)$		I_{OH}=-1mA	2.7 to 5.5	V_{DD}-0.4			
Low level output voltage	$V_{OL}(1)$	P00, P01	I_{OL}=30mA	4.5 to 5.5			1.5	
	$V_{OL}(2)$		I_{OL}=5mA	3.0 to 5.5			0.4	
	$V_{OL}(3)$		I_{OL}=2.5mA	2.7 to 5.5			0.4	
	$V_{OL}(4)$	Ports 0, 1, 2 PWM0, PWM1 XT2	I_{OL}=10mA	4.5 to 5.5			1.5	
	$V_{OL}(5)$		I_{OL}=1.6mA	3.0 to 5.5			0.4	
	$V_{OL}(6)$		I_{OL}=1mA	2.7 to 5.5			0.4	
	$V_{OL}(7)$	Ports 3, 7	I_{OL}=1.6mA	3.0 to 5.5			0.4	
	$V_{OL}(8)$		I_{OL}=1mA	2.7 to 5.5			0.4	
Pull-up resistance	Rpu(1)	Ports 0, 1, 2, 3 Port 7 $\overline{RES}$	$V_{OH}=0.9V_{DD}$	4.5 to 5.5	15	35	80	kΩ
	Rpu(2)			2.7 to 5.5	18	50	150	
Hysteresis voltage	VHYS	Port 1, 2, 3, 7		2.7 to 5.5		$0.1V_{DD}$		

Serial I/O Characteristics at Ta = -40℃ to +85℃, $V_{SS1} = V_{SS2} = V_{SS3} = 0V$

1. SIO0 Serial I/O Characteristics (Note 4-1-1)

Parameter			Symbol	Pin/ Remarks	Conditions	V_{DD}[V]	Specification min	typ	max	unit
Serial clock	Input clock	Frequency	tSCK(1)	SCK0(P12)	See Fig. 8.	2.7 to 5.5	2			tCYC
		Low level pulse width	tSCKL(1)				1			
		High level pulse width	tSCKH(1)				1			
			tSCKHA(1a)		• Continuous data transmission/ reception mode • USB not used at the same time. • See Fig. 8. • (Note 4-1-2)		4			
			tSCKHA(1b)		• Continuous data transmission/ reception mode • USB used at the same time. • See Fig. 8. • (Note 4-1-2)		7			
	Output clock	Frequency	tSCK(2)	SCK0(P12)	• When CMOS output type is selected • See Fig. 8.	2.7 to 5.5	4/3			
		Low level pulse width	tSCKL(2)				1/2			tSCK
		High level pulse width	tSCKH(2)				1/2			
			tSCKHA(2a)		• Continuous data transmission/ reception mode • USB not used at the same time. • When CMOS output type is selected • See Fig. 8.		tSCKH(2) +2tCYC		tSCKH(2) +(10/3) tCYC	tCYC
			tSCKHA(2b)		• Continuous data transmission/ reception mode • USB used at the same time. • When CMOS output type is selected. • See Fig. 8.		tSCKH(2) +2tCYC		tSCKH(2) +(19/3) tCYC	
Serial input	Data setup time		tsDI(1)	SB0(P11), SI0(P11)	• Must be specified with respect to rising edge of SIOCLK. • See Fig. 8.	2.7 to 5.5	0.03			µs
	Data hold time		thDI(1)				0.03			
Serial output	Input clock	Output delay time	tdD0(1)	SO0(P10), SB0(P11)	• Continuous data transmission/ reception mode • (Note 4-1-3)	2.7 to 5.5			(1/3)tCYC +0.05	
			tdD0(2)		• Synchronous 8-bit mode • (Note 4-1-3)				1tCYC +0.05	
	Output clock		tdD0(3)		(Note 4-1-3)				(1/3)tCYC +0.05	

Note 4-1-1: These specifications are theoretical values. Margins must be allowed according to the actual operating conditions.

Note 4-1-2: In an application where the serial clock input is to be used in the continuous data transfer mode, the time

2. SIO1 Serial I/O Characteristics (Note 4-2-1)

Parameter			Symbol	Pin/ Remarks	Conditions	V_{DD}[V]	Specification min	typ	max	unit
Serial clock	Input clock	Frequency	tSCK(3)	SCK1(P15)	See Fig. 8.	2.7 to 5.5	2			tCYC
		Low level pulse width	tSCKL(3)				1			
		High level pulse width	tSCKH(3)				1			
	Output clock	Frequency	tSCK(4)	SCK1(P15)	• When CMOS output type is selected • See Fig. 8.	2.7 to 5.5	2			
		Low level pulse width	tSCKL(4)				1/2			tSCK
		High level pulse width	tSCKH(4)				1/2			
Serial input	Data setup time		tsDI(2)	SB1(P14), SI1(P14)	• Must be specified with respect to rising edge of SIOCLK. • See Fig. 8.	2.7 to 5.5	0.03			µs
	Data hold time		thDI(2)				0.03			
Serial output	Output delay time		tdD0(4)	SO1(P13), SB1(P14)	• Must be specified with respect to falling edge of SIOCLK. • Must be specified as the time to the beginning of output state change in open drain output mode. • See Fig. 8.	2.7 to 5.5			(1/3)tCYC +0.05	

Note 4-2-1: These specifications are theoretical values. Margins must be allowed according to the actual operating conditions.

Pulse Input Conditions at Ta = -40℃ to +85℃, $V_{SS1} = V_{SS2} = V_{SS3} = 0V$

Parameter	Symbol	Pin/Remarks	Conditions	V_{DD}[V]	Specification min	typ	max	unit
High/low level pulse width	tP1H(1) tP1L(1)	INT0(P70), INT1(P71), INT2(P72), INT4(P20 to P23), INT5(P24 to P25), INT6(P20), INT7(P24)	• Interrupt source flag can be set. • Event inputs for timer 0 or 1 are enabled.	2.7 to 5.5	1			tCYC
	tPIH(2) tPIL(2)	INT3(P73) when noise filter time constant is 1/1	• Interrupt source flag can be set. • Event inputs for timer 0 are enabled.	2.7 to 5.5	2			
	tPIH(3) tPIL(3)	INT3(P73) when noise filter time constant is 1/32	• Interrupt source flag can be set. • Event inputs for timer 0 are nabled.	2.7 to 5.5	64			
	tPIH(4) tPIL(4)	INT3(P73) when noise filter time constant is 1/128	• Interrupt source flag can be set. • Event inputs for timer 0 are enabled.	2.7 to 5.5	256			
	tPIL(5)	$\overline{RES}$	Resetting is enabled.	2.7 to 5.5	200			µs

AD Converter Characteristics at Ta = -40℃ to +85℃, $V_{SS1} = V_{SS2} = V_{SS3} = 0V$

<12-bits AD Converter Mode>

Parameter	Symbol	Pin/Remarks	Conditions	V_{DD}[V]	Specification min	typ	max	unit
Resolution	N	AN0(P00) to AN7(P07), AN8(P70), AN9(P71), AN10(XT1), AN11(XT2)		3.0 to 5.5		12		bit
Absolute accuracy	ET		(Note 6-1)	3.0 to 5.5			±16	LSB
Conversion time	TCAD		See conversion time calculation formulas. (Note 6-2)	4.5 to 5.5	32		115	µs
				3.0 to 5.5	64		115	
Analog input voltage range	VAIN			3.0 to 5.5	V_{SS}		V_{DD}	V
Analog port input current	IAINH		VAIN=V_{DD}	3.0 to 5.5			1	µA
	IAINL		VAIN=V_{SS}	3.0 to 5.5	-1			

<8-bits AD Converter Mode>

Parameter	Symbol	Pin/Remarks	Conditions	V_{DD}[V]	Specification min	typ	max	unit
Resolution	N	AN0(P00) to AN7(P07), AN8(P70), AN9(P71), AN10(XT1), AN11(XT2)		3.0 to 5.5		8		bit
Absolute accuracy	ET		(Note 6-1)	3.0 to 5.5			±1.5	LSB
Conversion time	TCAD		See conversion time calculation formulas. (Note 6-2)	4.5 to 5.5	20		90	µs
				3.0 to 5.5	40		90	
Analog input voltage range	VAIN			3.0 to 5.5	V_{SS}		V_{DD}	V
Analog port input current	IAINH		VAIN=V_{DD}	3.0 to 5.5			1	µA
	IAINL		VAIN=V_{SS}	3.0 to 5.5	-1			

Conversion time calculation formulas :

12-bits AD Converter Mode : TCAD (Conversion time) = ((52/(AD division ratio))+2) × (1/3) × tCYC

8-bits AD Converter Mode : TCAD (Conversion time) = ((32/(AD division ratio))+2) × (1/3) × tCYC

<Recommended Operating Conditions>

External oscillator FmCF[MHz]	Supply Voltage Range V_{DD}[V]	System Clock Division (SYSDIV)	Cycle Time tCYC [ns]	AD Frequency Division Ratio (ADDIV)	Conversion Time (TCAD)[µs] 12-bit AD	8-bit AD
12	4.0 to 5.5	1/1	250	1/8	34.8	21.5
	3.0 to 5.5	1/1	250	1/16	69.5	42.8

Note 6-1: The quantization error (±1/2LSB) must be excluded from the absolute accuracy. The absolute accuracy must be measured in the microcontroller's state in which no I/O operations occur at the pins adjacent to the analog input channel.

Note 6-2: The conversion time refers to the period from the time an instruction for starting a conversion process till the time the conversion results register(s) are loaded with a complete digital conversion value corresponding to the analog input valI/ee an in0022 Twß 0 TD-.0 T-.02e.3(onf395.463480t4(an)- 18.126(6-2)-4.2(:)1.2(Th)-4. 18.12)-4.2(:)1

Consumption Current Characteristics at Ta = -40℃ to +85℃, $V_{SS1} = V_{SS2} = V_{SS3} = 0V$

Parameter	Symbol	Pin/ Remarks	Conditions	V_{DD}[V]	Specification min	typ	max	unit
Normal mode consumption current (Note 7-1)	IDDOP(1)	V_{DD1} =V_{DD2} =V_{DD3}	• FmCF=12MHz ceramic oscillation mode • FsX'tal=32.768kHz crystal oscillation mode • System clock set to 12MHz side • Internal PLL oscillation stopped • Internal RC oscillation stopped • USB circuit stopped • 1/1 frequency division ratio	4.5 to 5.5		7.8	15	mA
	IDDOP(2)			3.0 to 3.6		4.6	8.4	
	IDDOP(3)		• FmCF=12MHz ceramic oscillation mode • FsX'tal=32.768kHz crystal oscillation mode • System clock set to 12MHz side • Internal PLL oscillation mode active • Internal RC oscillation stopped • USB circuit active • 1/1 frequency division ratio	4.5 to 5.5		14	25	
	IDDOP(4)			3.0 to 3.6		7.1	14	
	IDDOP(5)		• FmCF=12MHz ceramic oscillation mode • FsX'tal=32.768kHz crystal oscillation mode • System clock set to 6MHz side • Internal RC oscillation stopped • 1/2 frequency division ratio	4.5 to 5.5		5.2	8.7	
	IDDOP(6)			3.0 to 3.6		3.4	5.6	
	IDDOP(7)			2.7 to 3.0		2.8	4.6	
	IDDOP(8)		• FmCF=0Hz (Oscillation stopped) • FsX'tal=32.768kHz crystal oscillation mode • System clock set to internal RC oscillation. • 1/2 frequency division ratio	4.5 to 5.5		0.63	2.3	
	IDDOP(9)			3.0 to 3.6		0.37	1.3	
	IDDOP(10)			2.7 to 3.0		0.32	1.0	
	IDDOP(11)		• FmCF=0Hz (Oscillation stopped) • FsX'tal=32.768kHz crystal oscillation mode • System clock set to crystal oscillation. (32.768kHz) • Internal RC oscillation stopped • 1/2 frequency division ratio	4.5 to 5.5		43	123	µA
	IDDOP(12)			3.0 to 3.6		17	52	
	IDDOP(13)			2.7 to 3.0		13	38	
HALT mode consumption current (Note7-1)	IDDHALT(1)		• HALT mode • FmCF=12MHz ceramic oscillation mode • FsX'tal=32.768kHz crystal oscillation mode • System clock set to 12MHz side • Internal PLL oscillation stopped • Internal RC oscillation stopped • USB circuit stopped • 1/1 frequency division ratio	4.5 to 5.5		3.3	5.9	mA
	IDDHALT(2)			3.0 to 3.6		1.7	3.1	
	IDDHALT(3)		• HALT mode • FmCF=12MHz ceramic oscillation mode • FsX'tal=32.768kHz crystal oscillation mode • System clock set to 12MHz side • Internal PLL oscillation mode active • Internal RC oscillation stopped • USB circuit active • 1/1 frequency division ratio	4.5 to 5.5		9.2	17	
	IDDHALT(4)			3.0 to 3.6		4.3	8.3	
	IDDHALT(5)		• HALT mode • FmCF=12MHz ceramic oscillation mode • FsX'tal=32.768kHz crystal oscillation mode • System clock set to 6MHz side • Internal RC oscillation stopped • 1/2 frequency division ratio	4.5 to 5.5		2.2	4.0	
	IDDHALT(6)			3.0 to 3.6		1.1	2.0	
	IDDHALT(7)			2.7 to 3.0		0.88	1.5	
	IDDHALT(8)		• HALT mode • FmCF=0Hz (Oscillation stopped) • FsX'tal=32.768kHz crystal oscillation mode	4.5 to 5.5		0.36	1.3	
	IDDHALT(9)			3.0 to 3.6		0.18	0.62	

Continued from preceding page.

Parameter	Symbol	Pin/ Remarks	Conditions	V_{DD}[V]	Specification min	typ	max	unit
HALT mode consumption current (Note 7-1)	IDDHALT(11)	$V_{DD}1$ =$V_{DD}2$ =$V_{DD}3$	• HALT mode • FmCF=0MHz (Oscillation stopped) • FsX'tal=32.768kHz crystal oscillation mode • System clock set to crystal oscillation. (32.768kHz) • Internal RC oscillation stopped • 1/2 frequency division ratio	4.5 to 5.5		31	99	μA
	IDDHALT(12)			3.0 to 3.6		8.2	36	
	IDDHALT(13)			2.7 to 3.0		5.5	25	
HOLD mode consumption current	IDDHOLD(1)	$V_{DD}1$	• HOLD mode • CF1=V_{DD} or open (External clock mode)	4.5 to 5.5		0.10	24	
	IDDHOLD(2)			3.0 to 3.6		0.04	13	
	IDDHOLD(3)			2.7 to 3.0		0.03	11	
Timer HOLD mode consumption current	IDDHOLD(4)		• Timer HOLD mode • CF1=V_{DD} or open (External clock mode) • FsX'tal=32.768kHz crystal oscillation mode	4.5 to 5.5		28	92	
	IDDHOLD(5)			3.0 to 3.6		6.6	32	
	IDDHOLD(6)			2.7 to 3.0		4.1	22	

Note 7-1: The consumption current value includes none of the currents that flow into the output Tr and internal pull-up resistors

USB Characteristics and Timing at Ta = -40℃ to +85℃, $V_{SS}1 = V_{SS}2 = V_{SS}3 = 0V$

Parameter	Symbol	Conditions	Specification min	typ	max	unit
High level output	$V_{OH(USB)}$	• 15kΩ±5% to GND	2.8		3.6	V
Low level output	$V_{OL(USB)}$	• 1.5kΩ±5% to 3.6V	0.0		0.3	V
Output signal crossover voltage	V_{CRS}		1.3		2.0	V
Differential input sensitivity	V_{DI}	• |(UHAD+)-(UHAD-)| • |(UHBD+)-(UHBD-)|	0.2			V
Differential input common mode range	V_{CM}		0.8		2.5	V
High level input	$V_{IH(USB)}$		2.0		3.6	V
Low level input	$V_{IL(USB)}$		0.0		0.8	V
USB data rise time	t_R	• R_S=33Ω, C_L=50pF	4		20	ns
USB data fall time	t_F	• R_S=33Ω, C_L=50pF	4		20	ns

F-ROM Programming Characteristics at Ta = +10℃ to +55℃, $V_{SS}1 = 0V$

Parameter	Symbol	Pin/ Remarks	Conditions	V_{DD}[V]	Specification min	typ	max	unit
Onboard programming current	IDDFW(1)	$V_{DD}1$	• Excluding power dissipation in the microcontroller block	3.0 to 5.5		5	10	mA
Programming time	tFW(1)		• Erase operation					

Characteristics of a Sample Main System Clock Oscillation Circuit

Given below are the characteristics of a sample main system clock oscillation circuit that are measured using a Our designated oscillation characteristics evaluation board and external components with circuit constant values with which the oscillator vendor confirmed normal and stable oscillation.
Table 1 shows the characteristics of a oscillation circuit when USB host function is not used.
If USB host function is to be used, it is absolutely recommended to use an oscillator that satisfies the precision and stability according to the USB standards.

Table 1 Characteristics of a Sample Main System Clock Oscillator Circuit with a Ceramic Oscillator

Nominal Frequency	Vendor Name	Oscillator Name	Circuit Constant			Operating Voltage Range [V]	Oscillation Stabilization Time		Remarks
			C1 [pF]	C2 [pF]	Rd1 [Ω]		typ [ms]	max [ms]	
12MHz	MURATA	CSTCE12M0GH5L**-R0	(33)	(33)	470	3.0 to 5.5	0.1	0.5	C1 and C2 integrated SMD type

The oscillation stabilization time refers to the time interval that is required for the oscillation to get stabilized in the following cases (see Figure 4):

- Till the oscillation gets stabilized after V_{DD} goes above the operating voltage lower limit.
- Till the oscillation gets stabilized after the instruction for starting the main clock oscillation circuit is executed
- Till the oscillation gets stabilized after the HOLD mode is reset.
- Till the oscillation gets stabilized after the X'tal HOLD mode is reset with CFSTOP (OCR register, bit 0) set to 0

Characteristics of a Sample Subsystem Clock Oscillator Circuit

Given below are the characteristics of a sample subsystem clock oscillation circuit that are measured using a Our designated oscillation characteristics evaluation board and external components with circuit constant values with which the oscillator vendor confirmed normal and stable oscillation.

Table 2 Characteristics of a Sample Subsystem Clock Oscillator Circuit with a Crystal Oscillator

Nominal Frequency	Vendor Name	Oscillator Name	Circuit Constant				Operating Voltage Range [V]	Oscillation Stabilization Time		Remarks
			C3 [pF]	C4 [pF]	Rf [Ω]	Rd2 [Ω]		typ [s]	max [s]	
32.768kHz	EPSON TOYOCOM	MC-306	18	18	OPEN	560k	2.7 to 5.5	1.1	3.0	Applicable CL value=12.5pF SMD type

The oscillation stabilization time refers to the time interval that is required for the oscillation to get stabilized in the following cases (see Figure 4):

- Till the oscillation gets stabilized after the instruction for starting the subclock oscillation circuit is executed
- Till the oscillation gets stabilized after the HOLD mode is reset with EXTOSC (OCR register, bit 6) set to 1

Note: The components that are involved in oscillation should be placed as close to the IC and to one another as possible because they are vulnerable to the influences of the circuit pattern.

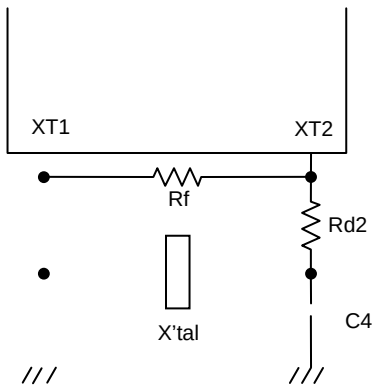

Figure 1 CF Oscillator Circuit

Figure 2 Crystal Oscillator Circuit

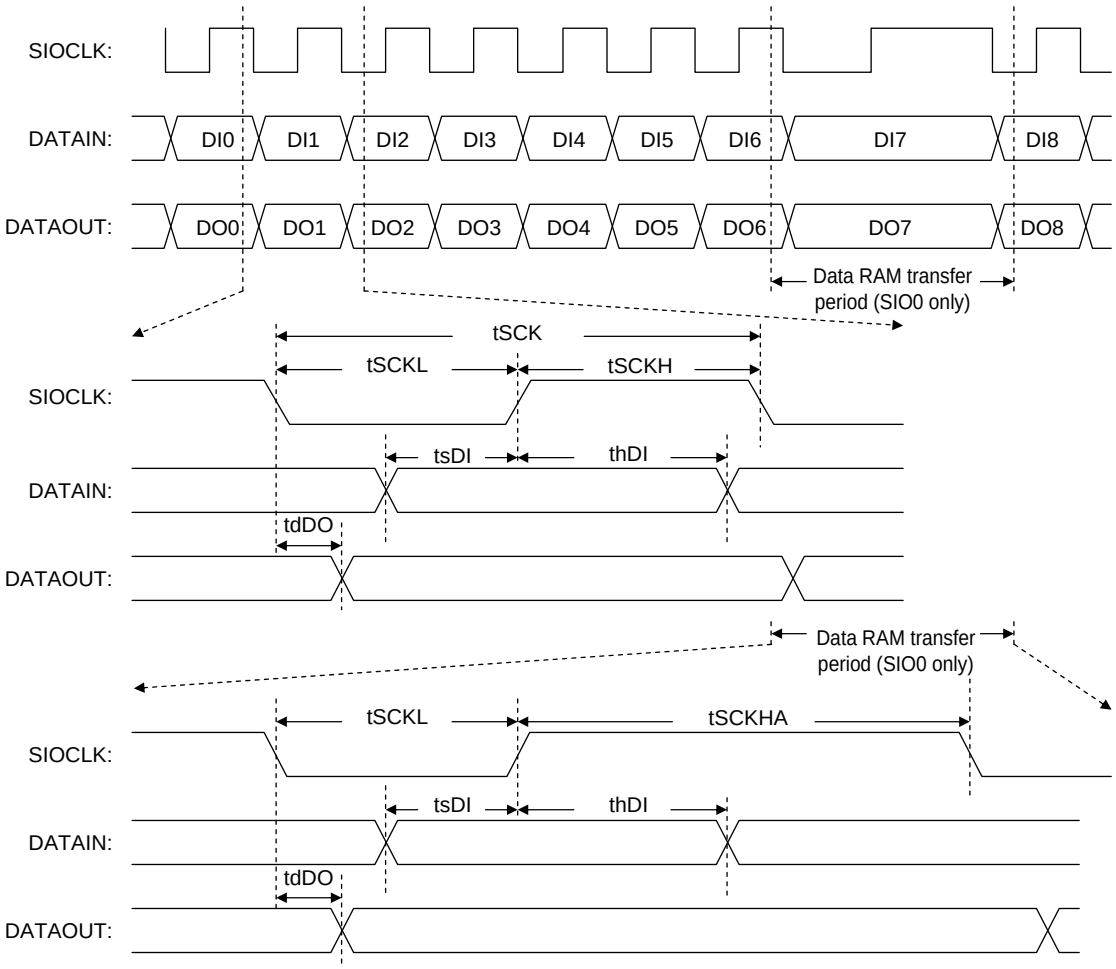

Figure 8 Serial Input/Output Waveform

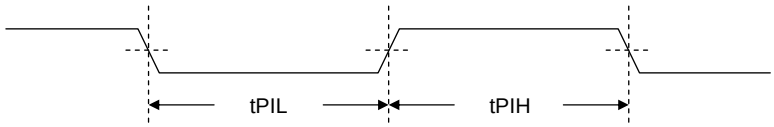

Figure 9 Pulse Input Timing Signal Waveform

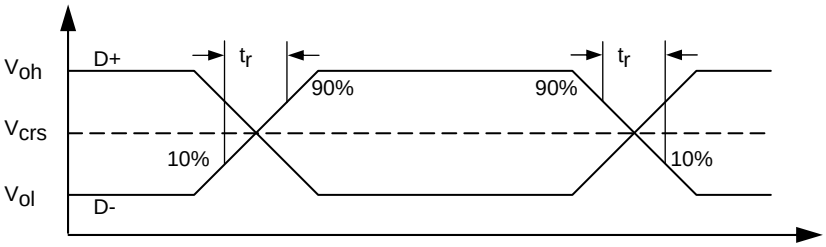

Figure 10 USB Data Signal Timing and Voltage Level

ON Semiconductor and the ON logo are registered trademarks of Semiconductor Components Industries, LLC (SCILLC). SCILLC owns the rights to a number of patents, trademarks, copyrights, trade secrets, and other intellectual property. A listing of SCILLC's product/patent coverage may be accessed at www.onsemi.com/site/pdf/Patent-Marking.pdf. SCILLC reserves the right to make changes without further notice to any products herein. SCILLC makes no warranty, representation or guarantee regarding the suitability of its products for any particular purpose, nor does SCILLC assume any liability arising out of the application or use of any product or circuit, and specifically disclaims any and all liability, including without limitation special, consequential or incidental damages. "Typical" parameters which may be provided in SCILLC data sheets and/or specifications can and do vary in different applications and actual performance may vary over time. All operating parameters, including "Typicals" must be validated for each customer application by customer's technical experts. SCILLC does not convey any license under its patent rights nor the rights of others. SCILLC products are not designed, intended, or authorized for use as components in systems intended for surgical implant into the body, or other applications intended to support or sustain life, or for any other application in which the failure of the SCILLC product could create a situation where personal injury or death may occur. Should Buyer purchase or use SCILLC products for any such unintended or unauthorized application, Buyer shall indemnify and hold SCILLC and its officers, employees, subsidiaries, affiliates, and distributors harmless against all claims, costs, damages, and expenses, and reasonable attorney fees arising out of, directly or indirectly, any claim of personal injury or death associated with such unintended or unauthorized use, even if such claim alleges that SCILLC was negligent regarding the design or manufacture of the part. SCILLC is an Equal Opportunity/Affirmative Action Employer. This literature is subject to all applicable copyright laws and is not for resale in any manner.