AMD Xilinx - XC2VP30-6FG676I Datasheet

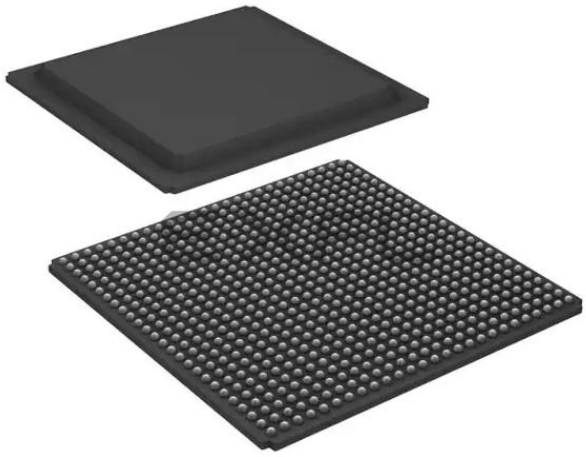

Welcome to E-XFL.COM

Understanding Embedded - FPGAs (Field Programmable Gate Array)

Embedded - FPGAs, or Field Programmable Gate Arrays, are advanced integrated circuits that offer unparalleled flexibility and performance for digital systems. Unlike traditional fixed-function logic devices, FPGAs can be programmed and reprogrammed to execute a wide array of logical operations, enabling customized functionality tailored to specific applications. This reprogrammability allows developers to iterate designs quickly and implement complex functions without the need for custom hardware.

Applications of Embedded - FPGAs

The versatility of Embedded - FPGAs makes them indispensable in numerous fields. In telecommunications.

Details	
Product Status	Obsolete
Number of LABs/CLBs	3424
Number of Logic Elements/Cells	30816
Total RAM Bits	2506752
Number of I/O	416
Number of Gates	-
Voltage - Supply	1.425V ~ 1.575V
Mounting Type	Surface Mount
Operating Temperature	-40°C ~ 100°C (TJ)
Package / Case	676-BGA
Supplier Device Package	676-FBGA (27x27)
Purchase URL	https://www.e-xfl.com/product-detail/xilinx/xc2vp30-6fg676i

Figure 36, Figure 37, and Figure 38 illustrate various example configurations.

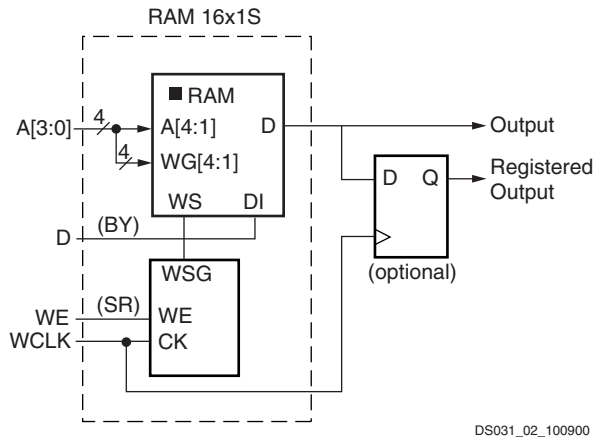

Figure 36: **Distributed SelectRAM+ (RAM16x1S)**

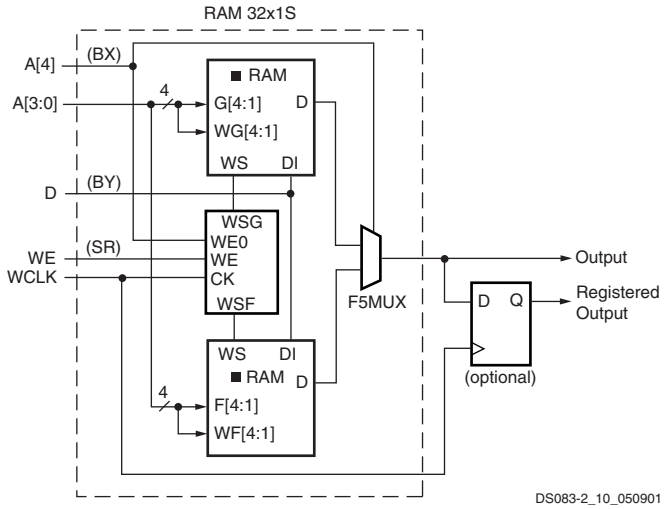

Figure 37: **Single-Port Distributed SelectRAM+ (RAM32x1S)**

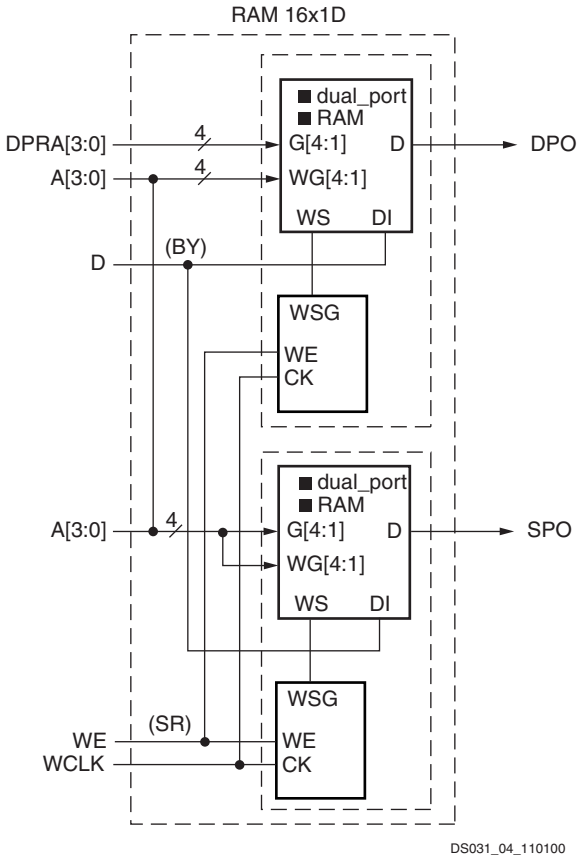

Figure 38: **Dual-Port Distributed SelectRAM+ (RAM16x1D)**

Similar to the RAM configuration, each function generator (LUT) can implement a 16 x 1-bit ROM. Five configurations are available: ROM16x1, ROM32x1, ROM64x1, ROM128x1, and ROM256x1. The ROM elements are cascadable to implement wider or/and deeper ROM. ROM contents are loaded at configuration. Table 17 shows the number of LUTs occupied by each configuration.

Table 17: **ROM Configuration**

ROM	Number of LUTs
16 x 1	1
32 x 1	2
64 x 1	4
128 x 1	8 (1 CLB)
256 x 1	16 (2 CLBs)

Multiplexers

Virtex-II Pro function generators and associated multiplexers can implement the following:

- 4:1 multiplexer in one slice
- 8:1 multiplexer in two slices
- 16:1 multiplexer in one CLB element (4 slices)
- 32:1 multiplexer in two CLB elements (8 slices)

Each Virtex-II Pro slice has one MUXF5 multiplexer and one MUXFX multiplexer. The MUXFX multiplexer implements the MUXF6, MUXF7, or MUXF8, as shown in Figure 41. Each CLB element has two MUXF6 multiplexers, one MUXF7 multiplexer and one MUXF8 multiplexer. Examples of multiplexers are shown in the *Virtex-II Pro Platform FPGA User Guide*. Any LUT can implement a 2:1 multiplexer.

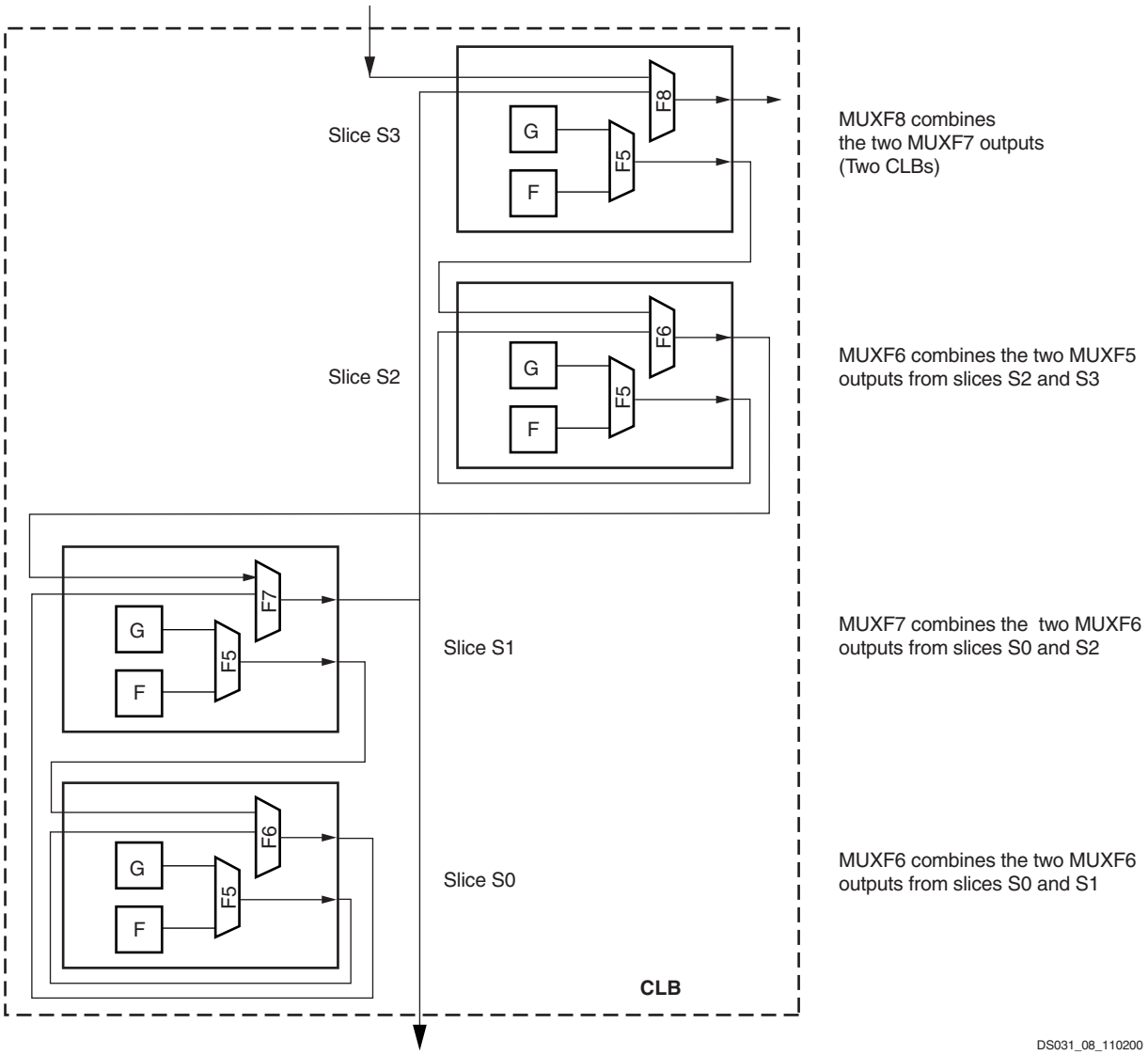

Figure 41: **MUXF5 and MUXFX multiplexers**

Fast Lookahead Carry Logic

Dedicated carry logic provides fast arithmetic addition and subtraction. The Virtex-II Pro CLB has two separate carry chains, as shown in the Figure 42.

The height of the carry chains is two bits per slice. The carry chain in the Virtex-II Pro device is running upward. The dedicated carry path and carry multiplexer (MUXCY) can also be used to cascade function generators for implementing wide logic functions.

Arithmetic Logic

The arithmetic logic includes an XOR gate that allows a 2-bit full adder to be implemented within a slice. In addition, a dedicated AND (MULT_AND) gate (shown in Figure 34) improves the efficiency of multiplier implementation.

Master SelectMAP Mode

This mode is a master version of the SelectMAP mode. The device is configured byte-wide on a CCLK supplied by the Virtex-II Pro FPGA device. Timing is similar to the Slave SerialMAP mode except that CCLK is supplied by the Virtex-II Pro FPGA.

Boundary-Scan (JTAG, IEEE 1532) Mode

In Boundary-Scan mode, dedicated pins are used for configuring the Virtex-II Pro device. The configuration is done entirely through the IEEE 1149.1 Test Access Port (TAP). Virtex-II Pro device configuration using Boundary-Scan is compatible with with IEEE 1149.1-1993 standard and the new IEEE 1532 standard for In-System Configurable (ISC) devices. The IEEE 1532 standard is backward compliant with the IEEE 1149.1-1993 TAP and state machine. The IEEE Standard 1532 for In-System Configurable (ISC) devices is intended to be programmed, reprogrammed, or tested on the board via a physical and logical protocol. Configuration through the Boundary-Scan port is always available, independent of the mode selection. Selecting the Boundary-Scan mode simply turns off the other modes.

Table 32: **Virtex-II Pro Configuration Mode Pin Settings**

Configuration Mode(1)	M2	M1	M0	CCLK Direction	Data Width	Serial D_{OUT}(2)
Master Serial	0	0	0	Out	1	Yes
Slave Serial	1	1	1	In	1	Yes
Master SelectMAP	0	1	1	Out	8	No
Slave SelectMAP	1	1	0	In	8	No
Boundary-Scan	1	0	1	N/A	1	No

Notes:
1. The HSWAP_EN pin controls the pull-ups. Setting M2, M1, and M0 selects the configuration mode, while the HSWAP_EN pin controls whether or not the pull-ups are used.
2. Daisy chaining is possible only in modes where Serial D_{OUT} is used. For example, in SelectMAP modes, the first device does NOT support daisy chaining of downstream devices.

Table 33 lists the default total number of bits required to configure each device.

Table 33: **Virtex-II Pro Default Bitstream Lengths**

Device	Number of Configuration Bits
XC2VP2	1,305,376
XC2VP4	3,006,496
XC2VP7	4,485,408
XC2VP20	8,214,560
XC2VPX20	8,214,560
XC2VP30	11,589,920
XC2VP40	15,868,192
XC2VP50	19,021,344
XC2VP70	26,098,976
XC2VPX70	26,098,976
XC2VP100	34,292,768

Configuration Sequence

The configuration of Virtex-II Pro devices is a three-phase process. First, the configuration memory is cleared. Next, configuration data is loaded into the memory, and finally, the logic is activated by a start-up process.

Configuration is automatically initiated on power-up unless it is delayed by the user. The INIT_B pin can be held Low using an open-drain driver. An open-drain is required since INIT_B is a bidirectional open-drain pin that is held Low by a Virtex-II Pro FPGA device while the configuration memory is being cleared. Extending the time that the pin is Low causes the configuration sequencer to wait. Thus, configuration is delayed by preventing entry into the phase where data is loaded.

The configuration process can also be initiated by asserting the PROG_B pin. The end of the memory-clearing phase is signaled by the INIT_B pin going High, and the completion of the entire process is signaled by the DONE pin going High. The Global Set/Reset (GSR) signal is pulsed after the last frame of configuration data is written but before the start-up sequence. The GSR signal resets all flip-flops on the device.

The default start-up sequence is that one CCLK cycle after DONE goes High, the global 3-state signal (GTS) is released. This permits device outputs to turn on as necessary. One CCLK cycle later, the Global Write Enable (GWE) signal is released. This permits the internal storage elements to begin changing state in response to the logic and the user clock.

The relative timing of these events can be changed via configuration options in software. In addition, the GTS and GWE events can be made dependent on the DONE pins of multiple devices all going High, forcing the devices to start

IOB Input Switching Characteristics

Input delays associated with the pad are specified for LVCMOS 2.5V levels. For other standards, adjust the delays with the values shown in IOB Input Switching Characteristics Standard Adjustments.

Table 35: **IOB Input Switching Characteristics**

			Speed Grade			
Description	**Symbol**	**Device**	**-7**	**-6**	**-5**	**Units**
Propagation Delays						
Pad to I output, no delay	T_{IOPI}	All	0.84	0.87	0.91	ns, max
Pad to I output, with delay	T_{IOPID}	XC2VP2	1.84	1.94	2.06	ns, max
		XC2VP4	1.84	1.94	2.06	ns, max
		XC2VP7	1.84	1.94	2.06	ns, max
		XC2VP20	2.14	2.23	2.37	ns, max
		XC2VPX20	2.14	2.23	2.37	ns, max
		XC2VP30	2.14	2.26	2.46	ns, max
		XC2VP40	2.54	2.67	2.81	ns, max
		XC2VP50	2.54	2.68	2.87	ns, max
		XC2VP70	2.54	2.72	2.91	ns, max
		XC2VPX70	2.54	2.72	2.91	ns, max
		XC2VP100	N/A	4.71	4.80	ns, max
Propagation Delays						
Pad to output IQ via transparent latch, no delay	T_{IOPLI}	All	0.86	0.89	0.93	ns, max
Pad to output IQ via transparent latch, with delay	T_{IOPLID}	XC2VP2	2.30	2.62	2.97	ns, max
		XC2VP4	2.57	2.89	3.23	ns, max
		XC2VP7	2.50	2.84	3.17	ns, max
		XC2VP20	2.65	3.04	3.42	ns, max
		XC2VPX20	2.65	3.04	3.42	ns, max
		XC2VP30	2.69	3.12	3.51	ns, max
		XC2VP40	3.30	3.63	4.03	ns, max
		XC2VP50	3.86	4.10	4.45	ns, max
		XC2VP70	4.00	4.25	4.57	ns, max
		XC2VPX70	4.00	4.25	4.57	ns, max
		XC2VP100	N/A	6.50	7.06	ns, max
Clock CLK to output IQ	T_{IOCKIQ}	All	0.60	0.60	0.67	ns, max

Date	Version	Revision
11/17/04	4.1	• Figure 8, Figure 9: Corrected T_{CCO} / DOUT to refer to the falling edge of CCLK. • Table 23: Added Footnote (4) to T_{PHASE} indicating an 8B/10B-type bitstream. Corrected T_{LOCK} from Typ to Max specification. Additional description of "2X oversampling" added to half-rate operation condition for F_{GCLK}, and added Footnote (2) requiring use of oversampling techniques in XAPP572 for serial bit rates under 1 Gb/s. • Table 25: Converted bit rate conditions for jitter parameters into four ranges. Added Footnote (2) requiring use of oversampling techniques in XAPP572 for serial bit rates under 1 Gb/s. • Table 27: Additional description of "2X oversampling" added to half-speed clock description for F_{GGTX}. Converted bit rate conditions for jitter parameters into four ranges. Added Footnotes (3) and (4) requiring use of oversampling techniques in XAPP572 for serial bit rates under 1 Gb/s. • Table 40: Changed capacitance C_{REF} for all PCI/PCI-X standards from 0 pF to 10 pF. • Table 49: Added Min/Max specifications for T_{ICCK}. • Section Power-On Power Supply Requirements, page 5: Added word "monotonically" to description of V_{CCINT} ramp-on requirements. Removed requirement that V_{CCAUX} must be powered on before or with V_{CCO}.
03/01/05	4.2	• Updated values in Virtex-II Pro Performance Characteristics and Virtex-II Pro Switching Characteristics tables, based on values extracted from **speedsfile version 1.90**. • Table 1 and Table 2: Corrected VCCAUXTX and VCCAUXRX to AVCCAUXTX and AVCCAUXRX respectively. • Table 3: Further clarified P_{RXTX} (MGT power dissipation) by explaining measurement method in Footnote (3). • Table 5: Added power-on current specifications for XC2VPX70 device. • Table 22: Changed F_{GTOL} from ±100 ppm to ±350 ppm. • Table 22 and Table 23: Changed T_{GJTT} bit rate qualifiers from fixed bit rates to bit rate ranges. • Table 36, Table 38, Table 39, and Table 40: Restructured these I/O-related tables to include descriptions, as well as the actual IOSTANDARD attributes (used in the Xilinx ICE™ software) for all I/O standards. • Table 36: Rearranged I/O standards in a more logical order. • Table 37: Added parameter T_{RPW} (Minimum Pulse Width, SR Input). • Table 38: Changed "Csl" to "C_{REF}" to agree with Figure 6 and Table 40. Rearranged I/O standards in a more logical order. • Table 39: Added footnote defining equivalents for DCI standards. • Table 40: Added Footnotes (2) and (3) to PCI/PCI-X capacitive load (C_{REF}) values. • Table 47: Added parameter T_{BCCS}, CLKA to CLKB Setup Time. • Table 50: Added Footnote (1) indicating that F_{CC_SERIAL} should not exceed $F_{CC_STARTUP}$ if CCLK frequency is not adjustable. • Table 52: T_{TCKTDO} corrected from a "Min" to a "Max" specification.
06/20/05	4.3	• Table 12: Added specifications for Differential Input Impedance.

Table 3: **Virtex-II Pro Available I/Os and RocketIO MGT Pins per Device/Package Combination**

Virtex-II Pro Device	User I/Os & RocketIO MGT Pins	Virtex-II Pro Package(1)									
		FG256/ FGG256	FG456/ FGG456	FG676/ FGG456	FF672	FF896	FF1152	FF1148	FF1517	FF1704	FF1696
XC2VP2	Available User I/Os	140	156	-	204	-	-	-	-	-	-
	RocketIO MGT Pins	36	36	-	36	-	-	-	-	-	-
	Differential I/O Pairs	68	76	-	100	-	-	-	-	-	-
XC2VP4	Available User I/Os	140	248	-	348	-	-	-	-	-	-
	RocketIO MGT Pins	36	36	-	36	-	-	-	-	-	-
	Differential I/O Pairs	68	122	-	172	-	-	-	-	-	-
XC2VP7	Available User I/Os	-	248	-	396	396	-	-	-	-	-
	RocketIO MGT Pins	-	72	-	72	72	-	-	-	-	-
	Differential I/O Pairs	-	122	-	196	196	-	-	-	-	-
XC2VP20	Available User I/Os	-	-	404	-	556	564	-	-	-	-
	RocketIO MGT Pins	-	-	72	-	72	72	-	-	-	-
	Differential I/O Pairs	-	-	196	-	272	276	-	-	-	-
XC2VPX20	**Available User I/Os**	**-**	**-**	**-**	**-**	**552**	**-**	**-**	**-**	**-**	**-**
	RocketIO X MGT Pins	**-**	**-**	**-**	**-**	**72**	**-**	**-**	**-**	**-**	**-**
	Differential I/O Pairs	**-**	**-**	**-**	**-**	**270**	**-**	**-**	**-**	**-**	**-**
XC2VP30	Available User I/Os	-	-	416	-	556	644	-	-	-	-
	RocketIO MGT Pins	-	-	72	-	72	72	-	-	-	-
	Differential I/O Pairs	-	-	202	-	272	316	-	-	-	-
XC2VP40	Available User I/Os	-	-	416	-	-	692	804	-	-	-
	RocketIO MGT Pins	-	-	72	-	-	108	0	-	-	-
	Differential I/O Pairs	-	-	202	-	-	340	396	-	-	-
XC2VP50	Available User I/Os	-	-		-	-	692	812	852	-	-
	RocketIO MGT Pins	-	-		-	-	144	0	144	-	-
	Differential I/O Pairs	-	-		-	-	340	400	420	-	-

Table 5: **FG256/FGG256 — XC2VP2 and XC2VP4**

Bank	Pin Description	Pin Number
7	VCCO_7	G6
N/A	CCLK	N15
N/A	PROG_B	D1
N/A	DONE	P16
N/A	M0	N3
N/A	M1	N2
N/A	M2	P1
N/A	TCK	D16
N/A	TDI	E1
N/A	TDO	E16
N/A	TMS	C16
N/A	PWRDWN_B	N14
N/A	HSWAP_EN	C1
N/A	RSVD	D14
N/A	VBATT	D15
N/A	DXP	D2
N/A	DXN	D3
N/A	AVCCAUXTX6	B5
N/A	VTTXPAD6	B4
N/A	TXNPAD6	A4
N/A	TXPPAD6	A5
N/A	GNDA6	C6
N/A	RXPPAD6	A6
N/A	RXNPAD6	A7
N/A	VTRXPAD6	B6
N/A	AVCCAUXRX6	B7
N/A	AVCCAUXTX7	B11
N/A	VTTXPAD7	B10
N/A	TXNPAD7	A10
N/A	TXPPAD7	A11
N/A	GNDA7	C11
N/A	RXPPAD7	A12
N/A	RXNPAD7	A13
N/A	VTRXPAD7	B12

Table 6: **FG456/FGG456 — XC2VP2, XC2VP4, and XC2VP7**

Bank	Pin Description	Pin Number	No Connects		
			XC2VP2	XC2VP4	XC2VP7
N/A	VCCAUX	L1			
N/A	VCCAUX	B21			
N/A	VCCAUX	B2			
N/A	VCCAUX	AB11			
N/A	VCCAUX	AA21			
N/A	VCCAUX	AA2			
N/A	VCCAUX	A12			
N/A	GND	Y3			
N/A	GND	Y20			
N/A	GND	W4			
N/A	GND	W19			
N/A	GND	V5			
N/A	GND	V18			
N/A	GND	P9			
N/A	GND	P14			
N/A	GND	P13			
N/A	GND	P12			
N/A	GND	P11			
N/A	GND	P10			
N/A	GND	N9			
N/A	GND	N14			
N/A	GND	N13			
N/A	GND	N12			
N/A	GND	N11			
N/A	GND	N10			
N/A	GND	M9			
N/A	GND	M14			
N/A	GND	M13			
N/A	GND	M12			
N/A	GND	M11			
N/A	GND	M10			
N/A	GND	M1			
N/A	GND	L9			
N/A	GND	L22			
N/A	GND	L14			
N/A	GND	L13			
N/A	GND	L12			

Table 8: **FF672 — XC2VP2, XC2VP4, and XC2VP7**

Bank	Pin Description	Pin Number	No Connects		
			XC2VP2	XC2VP4	XC2VP7
7	IO_L87N_7	M25			
7	IO_L86P_7	M24			
7	IO_L86N_7	M23			
7	IO_L85P_7	M22			
7	IO_L85N_7	M21			
7	IO_L60P_7	N19	NC		
7	IO_L60N_7	M19	NC		
7	IO_L59P_7	L26	NC		
7	IO_L59N_7	L25	NC		
7	IO_L58P_7	L24	NC		
7	IO_L58N_7/VREF_7	L23	NC		
7	IO_L57P_7	L22	NC		
7	IO_L57N_7	L21	NC		
7	IO_L56P_7	M20	NC		
7	IO_L56N_7	L20	NC		
7	IO_L55P_7	L19	NC		
7	IO_L55N_7	K20	NC		
7	IO_L54P_7	K26	NC		
7	IO_L54N_7	J26	NC		
7	IO_L53P_7	K24	NC		
7	IO_L53N_7	K23	NC		
7	IO_L52P_7	K22	NC		
7	IO_L52N_7/VREF_7	K21	NC		
7	IO_L51P_7	J25	NC		
7	IO_L51N_7	J24	NC		
7	IO_L50P_7	J23	NC		
7	IO_L50N_7	J22	NC		
7	IO_L49P_7	J21	NC		
7	IO_L49N_7	J20	NC		
7	IO_L48P_7	H26	NC		
7	IO_L48N_7	H25	NC		
7	IO_L47P_7	H24	NC		
7	IO_L47N_7	H23	NC		
7	IO_L46P_7	H22	NC		
7	IO_L46N_7/VREF_7	H21	NC		
7	IO_L45P_7	G26	NC		
7	IO_L45N_7	F26	NC		

Table 9: **FF896 — XC2VP7, XC2VP20, XC2VPX20, and XC2VP30**

Bank	Pin Description		Pin Number	No Connects		
	Virtex-II Pro devices	XC2VPX20 (if Different)		XC2VP7	XC2VP20, XC2VPX20	XC2VP30
1	IO_L02P_1		F7			
1	IO_L01N_1/VRP_1		E7			
1	IO_L01P_1/VRN_1		E6			
2	IO_L01N_2/VRP_2		A3			
2	IO_L01P_2/VRN_2		B3			
2	IO_L02N_2		G6			
2	IO_L02P_2		G5			
2	IO_L03N_2		C5			
2	IO_L03P_2		D5			
2	IO_L04N_2/VREF_2		C2			
2	IO_L04P_2		C1			
2	IO_L05N_2		J8			
2	IO_L05P_2		J7			
2	IO_L06N_2		C4			
2	IO_L06P_2		D3			
2	IO_L31N_2		D2	NC		
2	IO_L31P_2		D1	NC		
2	IO_L32N_2		H6	NC		
2	IO_L32P_2		H5	NC		
2	IO_L33N_2		E4	NC		
2	IO_L33P_2		E3	NC		
2	IO_L34N_2/VREF_2		E2	NC		
2	IO_L34P_2		E1	NC		
2	IO_L35N_2		K8	NC		
2	IO_L35P_2		K7	NC		
2	IO_L36N_2		F4	NC		
2	IO_L36P_2		F3	NC		
2	IO_L37N_2		F2	NC		
2	IO_L37P_2		F1	NC		
2	IO_L38N_2		J6	NC		
2	IO_L38P_2		J5	NC		
2	IO_L39N_2		G4	NC		
2	IO_L39P_2		G3	NC		
2	IO_L40N_2/VREF_2		G2	NC		
2	IO_L40P_2		G1	NC		

Table 9: **FF896 — XC2VP7, XC2VP20, XC2VPX20, and XC2VP30**

Bank	Pin Description		Pin Number	No Connects		
	Virtex-II Pro devices	XC2VPX20 (if Different)		XC2VP7	XC2VP20, XC2VPX20	XC2VP30
2	IO_L59N_2		P8			
2	IO_L59P_2		P7			
2	IO_L60N_2		N4			
2	IO_L60P_2		N3			
2	IO_L85N_2		P3			
2	IO_L85P_2		P2			
2	IO_L86N_2		R8			
2	IO_L86P_2		R7			
2	IO_L87N_2		P5			
2	IO_L87P_2		P4			
2	IO_L88N_2/VREF_2		R2			
2	IO_L88P_2		T2			
2	IO_L89N_2		R6			
2	IO_L89P_2		R5			
2	IO_L90N_2		R4			
2	IO_L90P_2		R3			
3	IO_L90N_3		U1			
3	IO_L90P_3		V1			
3	IO_L89N_3		T5			
3	IO_L89P_3		T6			
3	IO_L88N_3		T3			
3	IO_L88P_3		T4			
3	IO_L87N_3/VREF_3		U2			
3	IO_L87P_3		U3			
3	IO_L86N_3		T7			
3	IO_L86P_3		T8			
3	IO_L85N_3		U4			
3	IO_L85P_3		U5			
3	IO_L60N_3		V2			
3	IO_L60P_3		W2			
3	IO_L59N_3		T9			
3	IO_L59P_3		U9			
3	IO_L58N_3		V3			
3	IO_L58P_3		V4			
3	IO_L57N_3/VREF_3		W1			

Table 9: **FF896 — XC2VP7, XC2VP20, XC2VPX20, and XC2VP30**

Bank	Pin Description		Pin Number	No Connects		
	Virtex-II Pro devices	XC2VPX20 (if Different)		XC2VP7	XC2VP20, XC2VPX20	XC2VP30
6	IO_L86P_6		T23			
6	IO_L86N_6		T24			
6	IO_L87P_6		U28			
6	IO_L87N_6/VREF_6		U29			
6	IO_L88P_6		T27			
6	IO_L88N_6		T28			
6	IO_L89P_6		T25			
6	IO_L89N_6		T26			
6	IO_L90P_6		V30			
6	IO_L90N_6		U30			
7	IO_L90P_7		R28			
7	IO_L90N_7		R27			
7	IO_L89P_7		R26			
7	IO_L89N_7		R25			
7	IO_L88P_7		T29			
7	IO_L88N_7/VREF_7		R29			
7	IO_L87P_7		P27			
7	IO_L87N_7		P26			
7	IO_L86P_7		R24			
7	IO_L86N_7		R23			
7	IO_L85P_7		P29			
7	IO_L85N_7		P28			
7	IO_L60P_7		N28			
7	IO_L60N_7		N27			
7	IO_L59P_7		P24			
7	IO_L59N_7		P23			
7	IO_L58P_7		P30			
7	IO_L58N_7/VREF_7		N30			
7	IO_L57P_7		M28			
7	IO_L57N_7		M27			
7	IO_L56P_7		R22			
7	IO_L56N_7		P22			
7	IO_L55P_7		N29			
7	IO_L55N_7		M29			
7	IO_L54P_7		L27			

Table 11: **FF1148 — XC2VP40 and XC2VP50**

Bank	Pin Description	Pin Number	No Connects	
			XC2VP40	XC2VP50
3	IO_L17N_3	AH9		
3	IO_L17P_3	AJ9		
3	IO_L16N_3	AK7		
3	IO_L16P_3	AL7		
3	IO_L15N_3/VREF_3	AK4		
3	IO_L15P_3	AL4		
3	IO_L14N_3	AJ7		
3	IO_L14P_3	AJ8		
3	IO_L13N_3	AK3		
3	IO_L13P_3	AL3		
3	IO_L12N_3	AL5		
3	IO_L12P_3	AL6		
3	IO_L11N_3	AK8		
3	IO_L11P_3	AL8		
3	IO_L10N_3	AL1		
3	IO_L10P_3	AL2		
3	IO_L09N_3/VREF_3	AM6		
3	IO_L09P_3	AM7		
3	IO_L08N_3	AL9		
3	IO_L08P_3	AM9		
3	IO_L07N_3	AM5		
3	IO_L07P_3	AN5		
3	IO_L06N_3	AM1		
3	IO_L06P_3	AM2		
3	IO_L05N_3	AN8		
3	IO_L05P_3	AN9		
3	IO_L04N_3	AN6		
3	IO_L04P_3	AP6		
3	IO_L03N_3/VREF_3	AN4		
3	IO_L03P_3	AP4		
3	IO_L02N_3	AN7		
3	IO_L02P_3	AP7		
3	IO_L01N_3/VRP_3	AN3		
3	IO_L01P_3/VRN_3	AP3		
4	IO_L01N_4/BUSY/DOUT(1)	AK10		
4	IO_L01P_4/INIT_B	AJ10		
4	IO_L02N_4/D0/DIN(1)	AF11		

Table 11: **FF1148 — XC2VP40 and XC2VP50**

Bank	Pin Description	Pin Number	No Connects	
			XC2VP40	XC2VP50
5	IO_L27P_5	AL23		
5	IO_L26N_5	AD22		
5	IO_L26P_5	AE22		
5	IO_L25N_5	AJ23		
5	IO_L25P_5	AK23		
5	IO_L21N_5	AN24		
5	IO_L21P_5	AP24		
5	IO_L20N_5	AE23		
5	IO_L20P_5	AF23		
5	IO_L19N_5	AM23		
5	IO_L19P_5	AM24		
5	IO_L09N_5/VREF_5	AJ24		
5	IO_L09P_5	AK24		
5	IO_L08N_5	AG22		
5	IO_L08P_5	AG23		
5	IO_L07N_5/VREF_5	AH23		
5	IO_L07P_5	AH24		
5	IO_L06N_5/VRP_5	AN25		
5	IO_L06P_5/VRN_5	AP25		
5	IO_L05_5/No_Pair	AH25		
5	IO_L03N_5/D4	AL25		
5	IO_L03P_5/D5	AM25		
5	IO_L02N_5/D6	AE24		
5	IO_L02P_5/D7	AF24		
5	IO_L01N_5/RDWR_B	AJ25		
5	IO_L01P_5/CS_B	AK25		
6	IO_L01P_6/VRN_6	AP32		
6	IO_L01N_6/VRP_6	AN32		
6	IO_L02P_6	AP28		
6	IO_L02N_6	AN28		
6	IO_L03P_6	AP31		
6	IO_L03N_6/VREF_6	AN31		
6	IO_L04P_6	AP29		
6	IO_L04N_6	AN29		
6	IO_L05P_6	AN26		
6	IO_L05N_6	AN27		
6	IO_L06P_6	AM33		

Table 12: **FF1517 — XC2VP50 and XC2VP70**

Bank	Pin Description	Pin Number	No Connects	
			XC2VP50	XC2VP70
N/A	TXNPAD23	AW36		
N/A	VTTXPAD23	AV36		
N/A	AVCCAUXTX23	AV35		
N/A	VCCINT	AH28		
N/A	VCCINT	M28		
N/A	VCCINT	AG27		
N/A	VCCINT	N27		
N/A	VCCINT	AF26		
N/A	VCCINT	P26		
N/A	VCCINT	AE25		
N/A	VCCINT	AD25		
N/A	VCCINT	AC25		
N/A	VCCINT	AB25		
N/A	VCCINT	AA25		
N/A	VCCINT	Y25		
N/A	VCCINT	W25		
N/A	VCCINT	V25		
N/A	VCCINT	U25		
N/A	VCCINT	T25		
N/A	VCCINT	R25		
N/A	VCCINT	AE24		
N/A	VCCINT	AD24		
N/A	VCCINT	T24		
N/A	VCCINT	R24		
N/A	VCCINT	AE23		
N/A	VCCINT	R23		
N/A	VCCINT	AE22		
N/A	VCCINT	R22		
N/A	VCCINT	AE21		
N/A	VCCINT	R21		
N/A	VCCINT	AE20		
N/A	VCCINT	R20		
N/A	VCCINT	AE19		
N/A	VCCINT	R19		
N/A	VCCINT	AE18		
N/A	VCCINT	R18		
N/A	VCCINT	AE17		

Table 13: **FF1704 — XC2VP70, XC2VPX70, and XC2VP100**

Bank	Pin Description		Pin Number	No Connects	
	Virtex-II Pro Devices	XC2VPX70 (if Different)		XC2VP70, XC2VPX70	XC2VP100
7	IO_L27P_7		P33		
7	IO_L27N_7		P34		
7	IO_L26P_7		N31		
7	IO_L26N_7		N32		
7	IO_L25P_7		N41		
7	IO_L25N_7		N42		
7	IO_L24P_7		N39		
7	IO_L24N_7		N40		
7	IO_L23P_7		N33		
7	IO_L23N_7		N34		
7	IO_L22P_7		N37		
7	IO_L22N_7/VREF_7		N38		
7	IO_L21P_7		N35		
7	IO_L21N_7		N36		
7	IO_L20P_7		M38		
7	IO_L20N_7		M39		
7	IO_L19P_7		M40		
7	IO_L19N_7		M41		
7	IO_L18P_7		M33		
7	IO_L18N_7		M34		
7	IO_L17P_7		M31		
7	IO_L17N_7		M32		
7	IO_L16P_7		M35		
7	IO_L16N_7/VREF_7		M36		
7	IO_L15P_7		L41		
7	IO_L15N_7		L42		
7	IO_L14P_7		L39		
7	IO_L14N_7		L38		
7	IO_L13P_7		L40		
7	IO_L13N_7		K40		
7	IO_L12P_7		L36		
7	IO_L12N_7		L37		
7	IO_L11P_7		L34		
7	IO_L11N_7		L35		
7	IO_L10P_7		K42		
7	IO_L10N_7/VREF_7		K41		

Table 13: **FF1704 — XC2VP70, XC2VPX70, and XC2VP100**

Bank	Pin Description		Pin Number	No Connects	
	Virtex-II Pro Devices	XC2VPX70 (if Different)		XC2VP70, XC2VPX70	XC2VP100
1	VCCO_1		D18		
2	VCCO_2		AA15		
2	VCCO_2		AA14		
2	VCCO_2		Y15		
2	VCCO_2		Y14		
2	VCCO_2		Y8		
2	VCCO_2		Y5		
2	VCCO_2		W15		
2	VCCO_2		W14		
2	VCCO_2		V15		
2	VCCO_2		V14		
2	VCCO_2		V3		
2	VCCO_2		U15		
2	VCCO_2		U14		
2	VCCO_2		T15		
2	VCCO_2		T14		
2	VCCO_2		R14		
2	VCCO_2		T9		
2	VCCO_2		P4		
2	VCCO_2		M6		
2	VCCO_2		J3		
2	VCCO_2		F5		
3	VCCO_3		AU5		
3	VCCO_3		AP3		
3	VCCO_3		AL6		
3	VCCO_3		AJ4		
3	VCCO_3		AH14		
3	VCCO_3		AG15		
3	VCCO_3		AG14		
3	VCCO_3		AG9		
3	VCCO_3		AF15		
3	VCCO_3		AF14		
3	VCCO_3		AE15		
3	VCCO_3		AE14		
3	VCCO_3		AE3		
3	VCCO_3		AD15		

Table 14: **FF1696 — XC2VP100**

Bank	Pin Description	Pin Number	No Connects
			XC2VP100
0	IO_L34P_0	C30	
0	IO_L35N_0	L29	
0	IO_L35P_0	M29	
0	IO_L36N_0	H28	
0	IO_L36P_0/VREF_0	G29	
0	IO_L76N_0	E29	
0	IO_L76P_0	F29	
0	IO_L77N_0	J29	
0	IO_L77P_0	K29	
0	IO_L78N_0	D28	
0	IO_L78P_0	C29	
0	IO_L79N_0	A29	
0	IO_L79P_0	B29	
0	IO_L80_0/No_Pair	L28	
0	IO_L83_0/No_Pair	M28	
0	IO_L84N_0	G27	
0	IO_L84P_0	G28	
0	IO_L85N_0	E28	
0	IO_L85P_0	F28	
0	IO_L86N_0	J28	
0	IO_L86P_0	K28	
0	IO_L87N_0	C27	
0	IO_L87P_0/VREF_0	C28	
0	IO_L37N_0	A28	
0	IO_L37P_0	B28	
0	IO_L38N_0	L27	
0	IO_L38P_0	M27	
0	IO_L39N_0	H26	
0	IO_L39P_0	H27	
0	IO_L43N_0	E27	
0	IO_L43P_0	F27	
0	IO_L44N_0	J27	
0	IO_L44P_0	K27	
0	IO_L45N_0	D26	
0	IO_L45P_0/VREF_0	D27	
0	IO_L10N_0	A27	NC
0	IO_L10P_0	B27	NC

Table 14: **FF1696 — XC2VP100**

Bank	Pin Description	Pin Number	No Connects
			XC2VP100
6	IO_L15P_6	AP39	
6	IO_L15N_6/VREF_6	AP40	
6	IO_L16P_6	AP36	
6	IO_L16N_6	AP37	
6	IO_L17P_6	AH31	
6	IO_L17N_6	AG31	
6	IO_L18P_6	AN41	
6	IO_L18N_6	AN42	
6	IO_L19P_6	AN40	
6	IO_L19N_6	AM40	
6	IO_L20P_6	AG34	
6	IO_L20N_6	AG35	
6	IO_L21P_6	AN37	
6	IO_L21N_6/VREF_6	AN38	
6	IO_L22P_6	AN36	
6	IO_L22N_6	AM36	
6	IO_L23P_6	AG32	
6	IO_L23N_6	AG33	
6	IO_L24P_6	AM41	
6	IO_L24N_6	AM42	
6	IO_L25P_6	AM38	
6	IO_L25N_6	AM39	
6	IO_L26P_6	AF35	
6	IO_L26N_6	AF36	
6	IO_L27P_6	AM37	
6	IO_L27N_6/VREF_6	AL36	
6	IO_L28P_6	AL41	
6	IO_L28N_6	AK41	
6	IO_L29P_6	AF32	
6	IO_L29N_6	AF33	
6	IO_L30P_6	AL39	
6	IO_L30N_6	AL40	
6	IO_L31P_6	AL37	
6	IO_L31N_6	AL38	
6	IO_L32P_6	AF31	
6	IO_L32N_6	AE31	
6	IO_L33P_6	AK39	

Table 14: **FF1696 — XC2VP100**

Bank	Pin Description	Pin Number	No Connects
			XC2VP100
7	IO_L45N_7	T36	
7	IO_L44P_7	W32	
7	IO_L44N_7	W33	
7	IO_L43P_7	R41	
7	IO_L43N_7	R42	
7	IO_L42P_7	P40	
7	IO_L42N_7	R40	
7	IO_L41P_7	V36	
7	IO_L41N_7	V37	
7	IO_L40P_7	R38	
7	IO_L40N_7/VREF_7	R39	
7	IO_L39P_7	P38	
7	IO_L39N_7	R37	
7	IO_L38P_7	V34	
7	IO_L38N_7	V35	
7	IO_L37P_7	P41	
7	IO_L37N_7	P42	
7	IO_L36P_7	P36	
7	IO_L36N_7	P37	
7	IO_L35P_7	V32	
7	IO_L35N_7	V33	
7	IO_L34P_7	M41	
7	IO_L34N_7/VREF_7	N41	
7	IO_L33P_7	N39	
7	IO_L33N_7	N40	
7	IO_L32P_7	U35	
7	IO_L32N_7	U36	
7	IO_L31P_7	N36	
7	IO_L31N_7	N37	
7	IO_L30P_7	M39	
7	IO_L30N_7	M40	
7	IO_L29P_7	U32	
7	IO_L29N_7	U33	
7	IO_L28P_7	M37	
7	IO_L28N_7/VREF_7	M38	
7	IO_L27P_7	L37	
7	IO_L27N_7	M36	