AMD Xilinx - XC2VP50-5FF1517I Datasheet

Welcome to E-XFL.COM

Understanding Embedded - FPGAs (Field Programmable Gate Array)

Embedded - FPGAs, or Field Programmable Gate Arrays, are advanced integrated circuits that offer unparalleled flexibility and performance for digital systems. Unlike traditional fixed-function logic devices, FPGAs can be programmed and reprogrammed to execute a wide array of logical operations, enabling customized functionality tailored to specific applications. This reprogrammability allows developers to iterate designs quickly and implement complex functions without the need for custom hardware.

Applications of Embedded - FPGAs

The versatility of Embedded - FPGAs makes them indispensable in numerous fields. In telecommunications.

Details	
Product Status	Obsolete
Number of LABs/CLBs	5904
Number of Logic Elements/Cells	53136
Total RAM Bits	4276224
Number of I/O	852
Number of Gates	-
Voltage - Supply	1.425V ~ 1.575V
Mounting Type	Surface Mount
Operating Temperature	-40°C ~ 100°C (TJ)
Package / Case	1517-BBGA, FCBGA
Supplier Device Package	1517-FCBGA (40x40)
Purchase URL	https://www.e-xfl.com/product-detail/xilinx/xc2vp50-5ff1517i

The Trace port provides instruction execution trace information to an external trace tool. The PPC405 core is capable of back trace and forward trace. Back trace is the tracing of instructions prior to a debug event while forward trace is the tracing of instructions after a debug event.

The processor JTAG port and the FPGA JTAG port can be accessed independently, or the two can be programmatically linked together and accessed via the dedicated FPGA JTAG pins.

For detailed information on the PPC405 JTAG interface, please refer to the "JTAG Interface" section of the **PowerPC 405 Processor Block Reference Guide**

CoreConnect™ Bus Architecture

The Processor Block is compatible with the CoreConnect™ bus architecture. Any CoreConnect compliant cores including Xilinx soft IP can integrate with the Processor Block through this high-performance bus architecture implemented on FPGA fabric.

The CoreConnect architecture provides three buses for interconnecting Processor Blocks, Xilinx soft IP, third party IP, and custom logic, as shown in Figure 15:

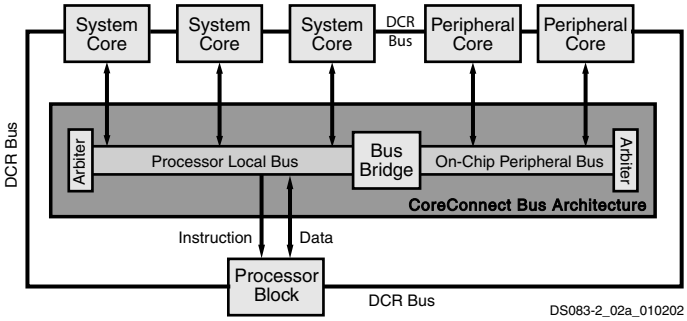

Figure 15: **CoreConnect Block Diagram**

- Processor Local Bus (PLB)
- On-Chip Peripheral Bus (OPB)
- Device Control Register (DCR) bus

High-performance peripherals connect to the high-bandwidth, low-latency PLB. Slower peripheral cores connect to the OPB, which reduces traffic on the PLB, resulting in greater overall system performance.

For more information, refer to:
http://www-3.ibm.com/chips/techlib/techlib.nfs/productfamilies/CoreConnect_Bus_Architecture/

Functional Description: Embedded PowerPC 405 Core

This section offers a brief overview of the various functional blocks shown in Figure 16.

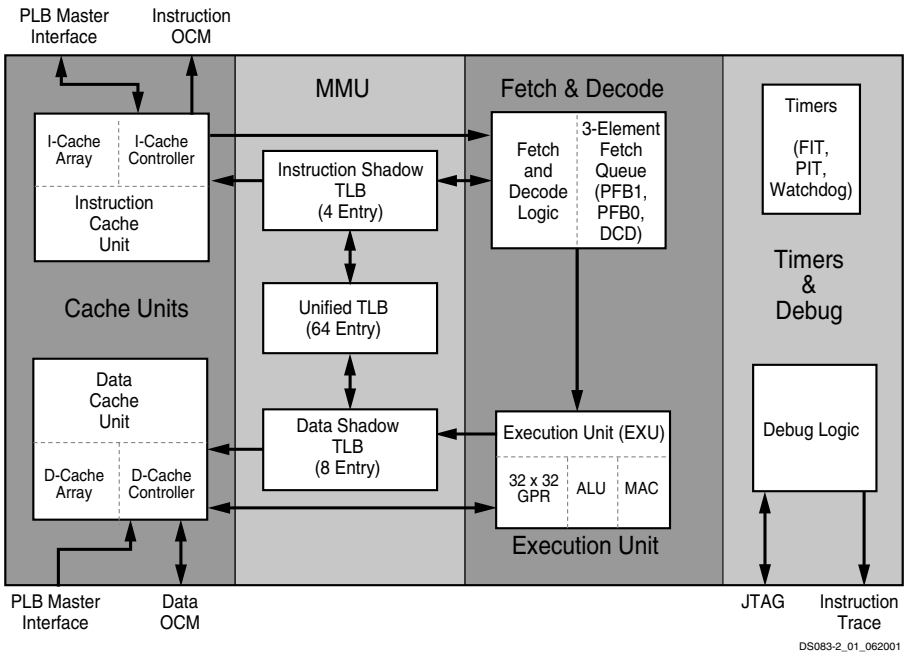

Figure 16: **Embedded PPC405 Core Block Diagram**

Embedded PPC405 Core

The embedded PPC405 core is a 32-bit Harvard architecture processor. Figure 16 illustrates its functional blocks:

- Cache units
- Memory Management unit
- Fetch Decode unit

CLB Distributed RAM Switching Characteristics

Table 43: **CLB Distributed RAM Switching Characteristics**

		Speed Grade			
Description	**Symbol**	**-7**	**-6**	**-5**	**Units**
Sequential Delays					
Clock CLK to X/Y outputs (WE active) in 16 x 1 mode	$T_{SHCKO16}$	1.25	1.38	1.54	ns, max
Clock CLK to X/Y outputs (WE active) in 32 x 1 mode	$T_{SHCKO32}$	1.57	1.75	1.95	ns, max
Clock CLK to F5 output	$T_{SHCKOF5}$	1.52	1.68	1.88	ns, max
Setup and Hold Times Before/After Clock CLK					
BX/BY data inputs (DIN)	T_{DS}/T_{DH}	0.38/–0.07	0.41/–0.07	0.46/–0.08	ns, min
F/G address inputs	T_{AS}/T_{AH}	0.42/ 0.00	0.47/ 0.00	0.52/ 0.00	ns, min
SR input	T_{WES}/T_{WEH}	0.22/ 0.04	0.24/ 0.05	0.26/ 0.05	ns, min
Clock CLK					
Minimum Pulse Width, High	T_{WPH}	0.63	0.72	0.79	ns, min
Minimum Pulse Width, Low	T_{WPL}	0.63	0.72	0.79	ns, min
Minimum clock period to meet address write cycle time	T_{WC}	1.25	1.44	1.58	ns, min

Notes:
1. A Zero “0” Hold Time listing indicates no hold time or a negative hold time. Negative values cannot be guaranteed “best-case”, but if a “0” is listed, there is no positive hold time.

CLB Shift Register Switching Characteristics

Table 44: **CLB Shift Register Switching Characteristics**

		Speed Grade			
Description	**Symbol**	**-7**	**-6**	**-5**	**Units**
Sequential Delays					
Clock CLK to X/Y outputs	T_{REG}	2.78	3.12	3.49	ns, max
Clock CLK to X/Y outputs	T_{REG32}	3.10	3.49	3.90	ns, max
Clock CLK to XB output via MC15 LUT output	T_{REGXB}	2.84	3.18	3.55	ns, max
Clock CLK to YB output via MC15 LUT output	T_{REGYB}	2.55	2.88	3.21	ns, max
Clock CLK to Shiftout	T_{CKSH}	2.50	2.83	3.15	ns, max
Clock CLK to F5 output	T_{REGF5}	3.05	3.42	3.83	ns, max
Setup and Hold Times Before/After Clock CLK					
BX/BY data inputs (DIN)	T_{SRLDS}/T_{SRLDH}	0.70/–0.16	0.77/–0.18	0.98/–0.21	ns, min
SR input	T_{WSS}/T_{WSH}	0.27/ 0.01	0.34/ 0.01	0.47/ 0.01	ns, min
Clock CLK					
Minimum Pulse Width, High	T_{SRPH}	0.63	0.72	0.79	ns, min
Minimum Pulse Width, Low	T_{SRPL}	0.63	0.72	0.79	ns, min

Notes:
1. A Zero “0” Hold Time listing indicates no hold time or a negative hold time. Negative values cannot be guaranteed “best-case”, but if a “0” is listed, there is no positive hold time.

Date	Version	Revision
09/15/05	4.4	• Table 2: Added Footnote (7) to AVCCAUXRX for RocketIO X (1.8V for all non-8B/10B-encoded data). • Table 3: - Power dissipation for 10.3125 Gb/s deleted. - Max $I_{CCAUXTX}$ and $I_{CCAUXRX}$ specifications added for Virtex-II Pro. • Table 11: Added specification for minimum p-p differential input voltage. • Table 22: - F_{GCLK}: Changed high end of range to 425 MHz. - T_{GJTT}: Changed measurement units to picoseconds and added maximum specifications for two bit rate ranges. - T_{LOCK}: Changed measurement units to microseconds and adderd typical specification. - T_{PHASE}: Changed measurement units to microseconds and adderd typical and maximum specifications. • Table 24: - All parameters: Deleted specifications for 10.3125 Gb/s. - T_{RJTOL}: Added typical specifications. - T_{JTOL}, T_{SJTOL}, and T_{DDJTOL}: Added typical and maximum specifications. • Table 26: Restructured table. Total Jitter parameter added. All jitter parameters respecified. • Table 28: Restructured table and added new specifications.
10/10/05	4.5	• Changed XC2VPX70 variable baud rate specification to fixed-rate operation at 4.25 Gb/s. • Table 15: Removed -7 designations for XC2VPX20 and XC2VPX70 devices.
03/05/07	4.6	*No changes in Module 3 for this revision.*
11/05/07	4.7	Updated copyright notice and legal disclaimer.
06/21/11	5.0	Added *Product Not Recommended for New Designs* banner. Changed I_{TRX} typical value in Table 3.

Notice of Disclaimer

THE XILINX HARDWARE FPGA AND CPLD DEVICES REFERRED TO HEREIN (“PRODUCTS”) ARE SUBJECT TO THE TERMS AND CONDITIONS OF THE XILINX LIMITED WARRANTY WHICH CAN BE VIEWED AT http://www.xilinx.com/warranty.htm. THIS LIMITED WARRANTY DOES NOT EXTEND TO ANY USE OF PRODUCTS IN AN APPLICATION OR ENVIRONMENT THAT IS NOT WITHIN THE SPECIFICATIONS STATED IN THE XILINX DATA SHEET. ALL SPECIFICATIONS ARE SUBJECT TO CHANGE WITHOUT NOTICE. PRODUCTS ARE NOT DESIGNED OR INTENDED TO BE FAIL-SAFE OR FOR USE IN ANY APPLICATION REQUIRING FAIL-SAFE PERFORMANCE, SUCH AS LIFE-SUPPORT OR SAFETY DEVICES OR SYSTEMS, OR ANY OTHER APPLICATION THAT INVOKES THE POTENTIAL RISKS OF DEATH, PERSONAL INJURY, OR PROPERTY OR ENVIRONMENTAL DAMAGE (“CRITICAL APPLICATIONS”). USE OF PRODUCTS IN CRITICAL APPLICATIONS IS AT THE SOLE RISK OF CUSTOMER, SUBJECT TO APPLICABLE LAWS AND REGULATIONS.

Virtex-II Pro Data Sheet

The Virtex-II Pro Data Sheet contains the following modules:

- Virtex-II Pro and Virtex-II Pro X Platform FPGAs: Introduction and Overview (Module 1)
- Virtex-II Pro and Virtex-II Pro X Platform FPGAs: Functional Description (Module 2)
- Virtex-II Pro and Virtex-II Pro X Platform FPGAs: DC and Switching Characteristics (Module 3)
- Virtex-II Pro and Virtex-II Pro X Platform FPGAs: Pinout Information (Module 4)

Table 6: **FG456/FGG456 — XC2VP2, XC2VP4, and XC2VP7**

Bank	Pin Description	Pin Number	No Connects		
			XC2VP2	XC2VP4	XC2VP7
0	VCCO_0	G9			
0	VCCO_0	G11			
0	VCCO_0	G10			
0	VCCO_0	F8			
0	VCCO_0	F7			
1	VCCO_1	G14			
1	VCCO_1	G13			
1	VCCO_1	G12			
1	VCCO_1	F16			
1	VCCO_1	F15			
2	VCCO_2	L16			
2	VCCO_2	K16			
2	VCCO_2	J16			
2	VCCO_2	H17			
2	VCCO_2	G17			
3	VCCO_3	T17			
3	VCCO_3	R17			
3	VCCO_3	P16			
3	VCCO_3	N16			
3	VCCO_3	M16			
4	VCCO_4	U16			
4	VCCO_4	U15			
4	VCCO_4	T14			
4	VCCO_4	T13			
4	VCCO_4	T12			
5	VCCO_5	U8			
5	VCCO_5	U7			
5	VCCO_5	T9			
5	VCCO_5	T11			
5	VCCO_5	T10			
6	VCCO_6	T6			
6	VCCO_6	R6			
6	VCCO_6	P7			
6	VCCO_6	N7			
6	VCCO_6	M7			
7	VCCO_7	L7			

Table 7: **FG676/FGG676 — XC2VP20, XC2VP30, and XC2VP40**

Bank	Pin Description	Pin Number	No Connects		
			XC2VP20	XC2VP30	XC2VP40
N/A	GND	H4			
N/A	GND	H23			
N/A	GND	K6			
N/A	GND	K21			
N/A	GND	L11			
N/A	GND	L12			
N/A	GND	L13			
N/A	GND	L14			
N/A	GND	L15			
N/A	GND	L16			
N/A	GND	M3			
N/A	GND	M11			
N/A	GND	M12			
N/A	GND	M13			
N/A	GND	M14			
N/A	GND	M15			
N/A	GND	M16			
N/A	GND	M24			
N/A	GND	N11			
N/A	GND	N12			
N/A	GND	N13			
N/A	GND	N14			
N/A	GND	N15			
N/A	GND	N16			
N/A	GND	P11			
N/A	GND	P12			
N/A	GND	P13			
N/A	GND	P14			
N/A	GND	P15			
N/A	GND	P16			
N/A	GND	R3			
N/A	GND	R11			
N/A	GND	R12			
N/A	GND	R13			
N/A	GND	R14			

Table 8: **FF672 — XC2VP2, XC2VP4, and XC2VP7**

Bank	Pin Description	Pin Number	No Connects		
			XC2VP2	XC2VP4	XC2VP7
N/A	AVCCAUXRX9	B4	NC	NC	
N/A	AVCCAUXRX16	AE4	NC	NC	
N/A	VTRXPAD16	AE5	NC	NC	
N/A	RXNPAD16	AF4	NC	NC	
N/A	RXPPAD16	AF5	NC	NC	
N/A	GNDA16	AD5	NC	NC	
N/A	TXPPAD16	AF6	NC	NC	
N/A	TXNPAD16	AF7	NC	NC	
N/A	VTTXPAD16	AE7	NC	NC	
N/A	AVCCAUXTX16	AE6	NC	NC	
N/A	AVCCAUXRX18	AE9			
N/A	VTRXPAD18	AE10			
N/A	RXNPAD18	AF9			
N/A	RXPPAD18	AF10			
N/A	GNDA18	AD11			
N/A	TXPPAD18	AF11			
N/A	TXNPAD18	AF12			
N/A	VTTXPAD18	AE12			
N/A	AVCCAUXTX18	AE11			
N/A	AVCCAUXTX4	B22	NC	NC	
N/A	VTTXPAD4	B23	NC	NC	
N/A	TXNPAD4	A23	NC	NC	
N/A	TXPPAD4	A22	NC	NC	
N/A	GNDA4	C22	NC	NC	
N/A	RXPPAD4	A21	NC	NC	
N/A	RXNPAD4	A20	NC	NC	
N/A	VTRXPAD4	B21	NC	NC	
N/A	AVCCAUXRX4	B20	NC	NC	
N/A	AVCCAUXTX6	B17			
N/A	VTTXPAD6	B18			
N/A	TXNPAD6	A18			
N/A	TXPPAD6	A17			
N/A	GNDA6	C16			
N/A	RXPPAD6	A16			
N/A	RXNPAD6	A15			
N/A	VTRXPAD6	B16			
N/A	AVCCAUXRX6	B15			

Table 9: **FF896 — XC2VP7, XC2VP20, XC2VPX20, and XC2VP30**

Bank	Pin Description		Pin Number	No Connects		
	Virtex-II Pro devices	XC2VPX20 (if Different)		XC2VP7	XC2VP20, XC2VPX20	XC2VP30
3	IO_L39P_3		AE2	NC		
3	IO_L38N_3		AA7	NC		
3	IO_L38P_3		AA8	NC		
3	IO_L37N_3		AD3	NC		
3	IO_L37P_3		AD4	NC		
3	IO_L36N_3		AF1	NC		
3	IO_L36P_3		AF2	NC		
3	IO_L35N_3		AC5	NC		
3	IO_L35P_3		AC6	NC		
3	IO_L34N_3		AF3	NC		
3	IO_L34P_3		AF4	NC		
3	IO_L33N_3/VREF_3		AE3	NC		
3	IO_L33P_3		AE4	NC		
3	IO_L32N_3		AB7	NC		
3	IO_L32P_3		AB8	NC		
3	IO_L31N_3		AE5	NC		
3	IO_L31P_3		AF6	NC		
3	IO_L06N_3		AG1			
3	IO_L06P_3		AG2			
3	IO_L05N_3		AD5			
3	IO_L05P_3		AD6			
3	IO_L04N_3		AG3			
3	IO_L04P_3		AH4			
3	IO_L03N_3/VREF_3		AH1			
3	IO_L03P_3		AH2			
3	IO_L02N_3		AG5			
3	IO_L02P_3		AH5			
3	IO_L01N_3/VRP_3		AJ3			
3	IO_L01P_3/VRN_3		AK3			
4	IO_L01N_4/BUSY/DOUT(1)		AG6			
4	IO_L01P_4/INIT_B		AF7			
4	IO_L02N_4/D0/DIN(1)		AC9			
4	IO_L02P_4/D1		AD9			
4	IO_L03N_4/D2		AG7			
4	IO_L03P_4/D3		AH7			

Table 10: **FF1152 — XC2VP20, XC2VP30, XC2VP40, and XC2VP50**

Bank	Pin Description	Pin Number	No Connects			
			XC2VP20	XC2VP30	XC2VP40	XC2VP50
1	IO_L74N_1/GCLK1P	D17				
1	IO_L74P_1/GCLK0S	E17				
1	IO_L73N_1	F17				
1	IO_L73P_1	G17				
1	IO_L69N_1/VREF_1	K17				
1	IO_L69P_1	L17				
1	IO_L68N_1	D16				
1	IO_L68P_1	E16				
1	IO_L67N_1	F16				
1	IO_L67P_1	G16				
1	IO_L57N_1/VREF_1	H16				
1	IO_L57P_1	J16				
1	IO_L56N_1	D15				
1	IO_L56P_1	D14				
1	IO_L55N_1	F15				
1	IO_L55P_1	G15				
1	IO_L54N_1	K16				
1	IO_L54P_1	L16				
1	IO_L53_1/No_Pair	C13				
1	IO_L50_1/No_Pair	C14				
1	IO_L49N_1	E14				
1	IO_L49P_1	F14				
1	IO_L48N_1	J15				
1	IO_L48P_1	K15				
1	IO_L47N_1	C11				
1	IO_L47P_1	D11				
1	IO_L46N_1	D12				
1	IO_L46P_1	D13				
1	IO_L45N_1/VREF_1	G14				
1	IO_L45P_1	H14				
1	IO_L44N_1	D10				
1	IO_L44P_1	E10				
1	IO_L43N_1	E13				
1	IO_L43P_1	F13				
1	IO_L39N_1	J14				
1	IO_L39P_1	K14				
1	IO_L38N_1	C9				
1	IO_L38P_1	D9				

Table 11: **FF1148 — XC2VP40 and XC2VP50**

Bank	Pin Description	Pin Number	No Connects	
			XC2VP40	XC2VP50
5	IO_L69P_5	AJ18		
5	IO_L68N_5	AF18		
5	IO_L68P_5	AG18		
5	IO_L67N_5	AM19		
5	IO_L67P_5	AN19		
5	IO_L66N_5/VREF_5	AH19	NC	
5	IO_L66P_5	AJ19	NC	
5	IO_L57N_5/VREF_5	AN20		
5	IO_L57P_5	AP20		
5	IO_L56N_5	AD19		
5	IO_L56P_5	AE19		
5	IO_L55N_5	AL19		
5	IO_L55P_5	AM20		
5	IO_L54N_5	AJ20		
5	IO_L54P_5	AK20		
5	IO_L53_5/No_Pair	AG19		
5	IO_L50_5/No_Pair	AH20		
5	IO_L49N_5	AN21		
5	IO_L49P_5	AP21		
5	IO_L48N_5	AL21		
5	IO_L48P_5	AM21		
5	IO_L47N_5	AD20		
5	IO_L47P_5	AE20		
5	IO_L46N_5	AJ21		
5	IO_L46P_5	AK21		
5	IO_L45N_5/VREF_5	AG21		
5	IO_L45P_5	AH21		
5	IO_L44N_5	AD21		
5	IO_L44P_5	AE21		
5	IO_L43N_5	AM22		
5	IO_L43P_5	AN22		
5	IO_L39N_5	AH22		
5	IO_L39P_5	AJ22		
5	IO_L38N_5	AF20		
5	IO_L38P_5	AF21		
5	IO_L37N_5	AN23		
5	IO_L37P_5	AP23		
5	IO_L27N_5/VREF_5	AL22		

Table 11: **FF1148 — XC2VP40 and XC2VP50**

Bank	Pin Description	Pin Number	No Connects	
			XC2VP40	XC2VP50
7	IO_L32P_7	N24		
7	IO_L32N_7	N25		
7	IO_L31P_7	G33		
7	IO_L31N_7	G34		
7	IO_L30P_7	H31		
7	IO_L30N_7	G32		
7	IO_L29P_7	N27		
7	IO_L29N_7	M28		
7	IO_L28P_7	G28		
7	IO_L28N_7/VREF_7	G29		
7	IO_L27P_7	F33		
7	IO_L27N_7	F34		
7	IO_L26P_7	M26		
7	IO_L26N_7	M27		
7	IO_L25P_7	F31		
7	IO_L25N_7	F32		
7	IO_L24P_7	F30		
7	IO_L24N_7	G30		
7	IO_L23P_7	L25		
7	IO_L23N_7	M25		
7	IO_L22P_7	F27		
7	IO_L22N_7/VREF_7	F28		
7	IO_L21P_7	E29		
7	IO_L21N_7	F29		
7	IO_L20P_7	L28		
7	IO_L20N_7	K28		
7	IO_L19P_7	D33		
7	IO_L19N_7	D34		
7	IO_L18P_7	D32		
7	IO_L18N_7	E32		
7	IO_L17P_7	K26		
7	IO_L17N_7	L26		
7	IO_L16P_7	D31		
7	IO_L16N_7/VREF_7	E31		
7	IO_L15P_7	D29		
7	IO_L15N_7	D30		
7	IO_L14P_7	J28		
7	IO_L14N_7	J29		

Table 12: **FF1517 — XC2VP50 and XC2VP70**

Bank	Pin Description	Pin Number	No Connects	
			XC2VP50	XC2VP70
2	IO_L11N_2	L9		
2	IO_L11P_2	M10		
2	IO_L12N_2	H4		
2	IO_L12P_2	J5		
2	IO_L13N_2	J1		
2	IO_L13P_2	J2		
2	IO_L14N_2	M8		
2	IO_L14P_2	N9		
2	IO_L15N_2	K6		
2	IO_L15P_2	K7		
2	IO_L16N_2/VREF_2	K4		
2	IO_L16P_2	K5		
2	IO_L17N_2	P10		
2	IO_L17P_2	N10		
2	IO_L18N_2	K3		
2	IO_L18P_2	J3		
2	IO_L19N_2	K1		
2	IO_L19P_2	K2		
2	IO_L20N_2	M11		
2	IO_L20P_2	N11		
2	IO_L21N_2	L7		
2	IO_L21P_2	L8		
2	IO_L22N_2/VREF_2	L5		
2	IO_L22P_2	L6		
2	IO_L23N_2	P8		
2	IO_L23P_2	P9		
2	IO_L24N_2	L3		
2	IO_L24P_2	L4		
2	IO_L25N_2	L1		
2	IO_L25P_2	L2		
2	IO_L26N_2	P11		
2	IO_L26P_2	P12		
2	IO_L27N_2	M6		
2	IO_L27P_2	M7		
2	IO_L28N_2/VREF_2	M2		
2	IO_L28P_2	M3		
2	IO_L29N_2	R9		
2	IO_L29P_2	R10		

Table 12: **FF1517 — XC2VP50 and XC2VP70**

Bank	Pin Description	Pin Number	No Connects	
			XC2VP50	XC2VP70
3	IO_L47P_3	AC10		
3	IO_L46N_3	AE7		
3	IO_L46P_3	AE8		
3	IO_L45N_3/VREF_3	AE5		
3	IO_L45P_3	AE6		
3	IO_L44N_3	AB13		
3	IO_L44P_3	AC13		
3	IO_L43N_3	AE3		
3	IO_L43P_3	AE4		
3	IO_L42N_3	AE1		
3	IO_L42P_3	AE2		
3	IO_L41N_3	AD10		
3	IO_L41P_3	AD11		
3	IO_L40N_3	AF6		
3	IO_L40P_3	AF7		
3	IO_L39N_3/VREF_3	AF4		
3	IO_L39P_3	AF5		
3	IO_L38N_3	AC12		
3	IO_L38P_3	AD12		
3	IO_L37N_3	AF1		
3	IO_L37P_3	AF2		
3	IO_L36N_3	AG6		
3	IO_L36P_3	AG7		
3	IO_L35N_3	AE9		
3	IO_L35P_3	AE10		
3	IO_L34N_3	AF3		
3	IO_L34P_3	AG3		
3	IO_L33N_3/VREF_3	AG1		
3	IO_L33P_3	AG2		
3	IO_L32N_3	AE11		
3	IO_L32P_3	AE12		
3	IO_L31N_3	AH6		
3	IO_L31P_3	AH7		
3	IO_L30N_3	AG5		
3	IO_L30P_3	AH4		
3	IO_L29N_3	AD13		
3	IO_L29P_3	AE13		
3	IO_L28N_3	AH2		

Table 12: **FF1517 — XC2VP50 and XC2VP70**

Bank	Pin Description	Pin Number	No Connects	
			XC2VP50	XC2VP70
7	IO_L43N_7	R37		
7	IO_L42P_7	R34		
7	IO_L42N_7	R35		
7	IO_L41P_7	U28		
7	IO_L41N_7	T28		
7	IO_L40P_7	R32		
7	IO_L40N_7/VREF_7	R33		
7	IO_L39P_7	P38		
7	IO_L39N_7	P39		
7	IO_L38P_7	T29		
7	IO_L38N_7	T30		
7	IO_L37P_7	N37		
7	IO_L37N_7	P37		
7	IO_L36P_7	P35		
7	IO_L36N_7	P36		
7	IO_L35P_7	T27		
7	IO_L35N_7	R27		
7	IO_L34P_7	P33		
7	IO_L34N_7/VREF_7	P34		
7	IO_L33P_7	N38		
7	IO_L33N_7	N39		
7	IO_L32P_7	R28		
7	IO_L32N_7	R29		
7	IO_L31P_7	N35		
7	IO_L31N_7	M36		
7	IO_L30P_7	N33		
7	IO_L30N_7	N34		
7	IO_L29P_7	R30		
7	IO_L29N_7	R31		
7	IO_L28P_7	M37		
7	IO_L28N_7/VREF_7	M38		
7	IO_L27P_7	M33		
7	IO_L27N_7	M34		
7	IO_L26P_7	P28		
7	IO_L26N_7	P29		
7	IO_L25P_7	L38		
7	IO_L25N_7	L39		
7	IO_L24P_7	L36		

Table 12: **FF1517 — XC2VP50 and XC2VP70**

Bank	Pin Description	Pin Number	No Connects	
			XC2VP50	XC2VP70
N/A	GND	AM39		
N/A	GND	AH39		
N/A	GND	AD39		
N/A	GND	T39		
N/A	GND	M39		
N/A	GND	H39		
N/A	GND	C39		
N/A	GND	AV38		
N/A	GND	AU38		
N/A	GND	AA38		
N/A	GND	W38		
N/A	GND	C38		

Notes:
1. See Table 4 for an explanation of the signals available on this pin.

Table 13: **FF1704 — XC2VP70, XC2VPX70, and XC2VP100**

Bank	Pin Description		Pin Number	No Connects	
	Virtex-II Pro Devices	XC2VPX70 (if Different)		XC2VP70, XC2VPX70	XC2VP100
2	IO_L08P_2		K5		
2	IO_L09N_2		K8		
2	IO_L09P_2		K7		
2	IO_L10N_2/VREF_2		K2		
2	IO_L10P_2		K1		
2	IO_L11N_2		L8		
2	IO_L11P_2		L9		
2	IO_L12N_2		L6		
2	IO_L12P_2		L7		
2	IO_L13N_2		K3		
2	IO_L13P_2		L3		
2	IO_L14N_2		L5		
2	IO_L14P_2		L4		
2	IO_L15N_2		L1		
2	IO_L15P_2		L2		
2	IO_L16N_2/VREF_2		M7		
2	IO_L16P_2		M8		
2	IO_L17N_2		M11		
2	IO_L17P_2		M12		
2	IO_L18N_2		M9		
2	IO_L18P_2		M10		
2	IO_L19N_2		M2		
2	IO_L19P_2		M3		
2	IO_L20N_2		M4		
2	IO_L20P_2		M5		
2	IO_L21N_2		N7		
2	IO_L21P_2		N8		
2	IO_L22N_2/VREF_2		N5		
2	IO_L22P_2		N6		
2	IO_L23N_2		N9		
2	IO_L23P_2		N10		
2	IO_L24N_2		N3		
2	IO_L24P_2		N4		
2	IO_L25N_2		N1		
2	IO_L25P_2		N2		
2	IO_L26N_2		N11		

Table 13: **FF1704 — XC2VP70, XC2VPX70, and XC2VP100**

Bank	Pin Description		Pin Number	No Connects	
	Virtex-II Pro Devices	XC2VPX70 (if Different)		XC2VP70, XC2VPX70	XC2VP100
2	IO_L26P_2		N12		
2	IO_L27N_2		P9		
2	IO_L27P_2		P10		
2	IO_L28N_2/VREF_2		P7		
2	IO_L28P_2		P8		
2	IO_L29N_2		P11		
2	IO_L29P_2		P12		
2	IO_L30N_2		P5		
2	IO_L30P_2		P6		
2	IO_L31N_2		P1		
2	IO_L31P_2		P2		
2	IO_L32N_2		R9		
2	IO_L32P_2		R10		
2	IO_L33N_2		R5		
2	IO_L33P_2		R6		
2	IO_L34N_2/VREF_2		P3		
2	IO_L34P_2		R3		
2	IO_L35N_2		R1		
2	IO_L35P_2		R2		
2	IO_L36N_2		R11		
2	IO_L36P_2		R12		
2	IO_L37N_2		T6		
2	IO_L37P_2		T7		
2	IO_L38N_2		T8		
2	IO_L38P_2		R8		
2	IO_L39N_2		T4		
2	IO_L39P_2		T5		
2	IO_L40N_2/VREF_2		T2		
2	IO_L40P_2		T3		
2	IO_L41N_2		T10		
2	IO_L41P_2		T11		
2	IO_L42N_2		U7		
2	IO_L42P_2		U8		
2	IO_L43N_2		U5		
2	IO_L43P_2		U6		
2	IO_L44N_2		U9		

Table 13: **FF1704 — XC2VP70, XC2VPX70, and XC2VP100**

Bank	Pin Description		Pin Number	No Connects	
	Virtex-II Pro Devices	XC2VPX70 (if Different)		XC2VP70, XC2VPX70	XC2VP100
2	IO_L44P_2		U10		
2	IO_L45N_2		U3		
2	IO_L45P_2		U4		
2	IO_L46N_2/VREF_2		U1		
2	IO_L46P_2		U2		
2	IO_L47N_2		T12		
2	IO_L47P_2		U12		
2	IO_L48N_2		V10		
2	IO_L48P_2		V11		
2	IO_L49N_2		V7		
2	IO_L49P_2		V8		
2	IO_L50N_2		U11		
2	IO_L50P_2		V12		
2	IO_L51N_2		V4		
2	IO_L51P_2		V5		
2	IO_L52N_2/VREF_2		V1		
2	IO_L52P_2		V2		
2	IO_L53N_2		W9		
2	IO_L53P_2		W10		
2	IO_L54N_2		W7		
2	IO_L54P_2		W8		
2	IO_L55N_2		W5		
2	IO_L55P_2		W6		
2	IO_L56N_2		W11		
2	IO_L56P_2		W12		
2	IO_L57N_2		W3		
2	IO_L57P_2		W4		
2	IO_L58N_2/VREF_2		W1		
2	IO_L58P_2		W2		
2	IO_L59N_2		Y9		
2	IO_L59P_2		Y10		
2	IO_L60N_2		Y6		
2	IO_L60P_2		Y7		
2	IO_L85N_2		Y3		
2	IO_L85P_2		Y4		
2	IO_L86N_2		Y11		

Table 13: **FF1704 — XC2VP70, XC2VPX70, and XC2VP100**

Bank	Pin Description		Pin Number	No Connects	
	Virtex-II Pro Devices	XC2VPX70 (if Different)		XC2VP70, XC2VPX70	XC2VP100
3	IO_L17N_3		AL9		
3	IO_L17P_3		AL10		
3	IO_L16N_3		AM1		
3	IO_L16P_3		AM2		
3	IO_L15N_3/VREF_3		AM3		
3	IO_L15P_3		AN3		
3	IO_L14N_3		AM8		
3	IO_L14P_3		AM9		
3	IO_L13N_3		AM4		
3	IO_L13P_3		AM5		
3	IO_L12N_3		AM6		
3	IO_L12P_3		AM7		
3	IO_L11N_3		AN9		
3	IO_L11P_3		AM10		
3	IO_L10N_3		AN1		
3	IO_L10P_3		AN2		
3	IO_L09N_3/VREF_3		AN5		
3	IO_L09P_3		AN6		
3	IO_L08N_3		AN7		
3	IO_L08P_3		AN8		
3	IO_L07N_3		AP1		
3	IO_L07P_3		AP2		
3	IO_L84N_3		AP4		
3	IO_L84P_3		AP5		
3	IO_L83N_3		AR7		
3	IO_L83P_3		AP8		
3	IO_L82N_3		AP6		
3	IO_L82P_3		AP7		
3	IO_L81N_3/VREF_3		AR2		
3	IO_L81P_3		AR3		
3	IO_L80N_3		AT5		
3	IO_L80P_3		AR6		
3	IO_L79N_3		AR4		
3	IO_L79P_3		AR5		
3	IO_L78N_3		AT1		
3	IO_L78P_3		AT2		

Table 13: **FF1704 — XC2VP70, XC2VPX70, and XC2VP100**

Bank	Pin Description		Pin Number	No Connects	
	Virtex-II Pro Devices	XC2VPX70 (if Different)		XC2VP70, XC2VPX70	XC2VP100
N/A	TXPPAD7		A20		
N/A	GNDA7		C21		
N/A	RXPPAD7		A19		
N/A	RXNPAD7		A18		
N/A	VTRXPAD7		B19		
N/A	AVCCAUXRX7		B18		
N/A	AVCCAUXTX8		B16		
N/A	VTTXPAD8		B17		
N/A	TXNPAD8		A17		
N/A	TXPPAD8		A16		
N/A	GNDA8		C16		
N/A	RXPPAD8		A15		
N/A	RXNPAD8		A14		
N/A	VTRXPAD8		B15		
N/A	AVCCAUXRX8		B14		
N/A	AVCCAUXTX9		B12		
N/A	VTTXPAD9		B13		
N/A	TXNPAD9		A13		
N/A	TXPPAD9		A12		
N/A	GNDA9		C12		
N/A	RXPPAD9		A11		
N/A	RXNPAD9		A10		
N/A	VTRXPAD9		B11		
N/A	AVCCAUXRX9		B10		
N/A	AVCCAUXTX10		B8		
N/A	VTTXPAD10		B9		
N/A	TXNPAD10		A9		
N/A	TXPPAD10		A8		
N/A	GNDA10		C8		
N/A	RXPPAD10		A7		
N/A	RXNPAD10		A6		
N/A	VTRXPAD10		B7		
N/A	AVCCAUXRX10		B6		
N/A	AVCCAUXTX11		B4		
N/A	VTTXPAD11		B5		
N/A	TXNPAD11		A5		

Table 13: **FF1704 — XC2VP70, XC2VPX70, and XC2VP100**

Bank	Pin Description		Pin Number	No Connects	
	Virtex-II Pro Devices	XC2VPX70 (if Different)		XC2VP70, XC2VPX70	XC2VP100
N/A	RXPPAD17		BB15		
N/A	GNDA17		AY16		
N/A	TXPPAD17		BB16		
N/A	TXNPAD17		BB17		
N/A	VTTXPAD17		BA17		
N/A	AVCCAUXTX17		BA16		
N/A	AVCCAUXRX18		BA18		
N/A	VTRXPAD18		BA19		
N/A	RXNPAD18		BB18		
N/A	RXPPAD18		BB19		
N/A	GNDA18		AY21		
N/A	TXPPAD18		BB20		
N/A	TXNPAD18		BB21		
N/A	VTTXPAD18		BA21		
N/A	AVCCAUXTX18		BA20		
N/A	AVCCAUXRX19		BA22		
N/A	VTRXPAD19		BA23		
N/A	RXNPAD19		BB22		
N/A	RXPPAD19		BB23		
N/A	GNDA19		AY22		
N/A	TXPPAD19		BB24		
N/A	TXNPAD19		BB25		
N/A	VTTXPAD19		BA25		
N/A	AVCCAUXTX19		BA24		
N/A	AVCCAUXRX20		BA26		
N/A	VTRXPAD20		BA27		
N/A	RXNPAD20		BB26		
N/A	RXPPAD20		BB27		
N/A	GNDA20		AY27		
N/A	TXPPAD20		BB28		
N/A	TXNPAD20		BB29		
N/A	VTTXPAD20		BA29		
N/A	AVCCAUXTX20		BA28		
N/A	AVCCAUXRX21		BA30		
N/A	VTRXPAD21		BA31		
N/A	RXNPAD21		BB30		