Welcome to E-XFL.COM

What is "Embedded - Microcontrollers"?

"Embedded - Microcontrollers" refer to small, integrated circuits designed to perform specific tasks within larger systems. These microcontrollers are essentially compact computers on a single chip, containing a processor core, memory, and programmable input/output peripherals. They are called "embedded" because they are embedded within electronic devices to control various functions, rather than serving as standalone computers. Microcontrollers are crucial in modern electronics, providing the intelligence and control needed for a wide range of applications.

Applications of "Embedded - Microcontrollers"

Details	
Product Status	Obsolete
Core Processor	ARM® Cortex®-M3
Core Size	32-Bit Single-Core
Speed	16MHz
Connectivity	I²C, SPI, UART/USART, USB
Peripherals	Brown-out Detect/Reset, DMA, I²S, LCD, POR, PWM, WDT
Number of I/O	48
Program Memory Size	256KB (256K x 8)
Program Memory Type	FLASH
EEPROM Size	-
RAM Size	48K x 8
Voltage - Supply (Vcc/Vdd)	1.8V ~ 3.6V
Data Converters	A/D 2x16b; D/A 3x10b
Oscillator Type	Internal
Operating Temperature	0°C ~ 50°C (TA)
Mounting Type	Surface Mount
Package / Case	140-UFLGA Exposed Pad
Supplier Device Package	140-TLLGA (10x10)
Purchase URL	https://www.e-xfl.com/product-detail/onsemi/q32m210f08alna

Contents

Introduction 1
Key Features 2
Functional Overview 4
Pin Definition and Descriptions 11
Recommended Operating Conditions 19
ESD and Latch−up Characteristics 19
Electrical Characteristics 20
Typical Operating Characteristics 33
Detailed Function Descriptions 38
Example Application Diagrams 46

Key Features

Ultra Low−Power and Smart Power Management

- Less than 400 μA / MHz, up to 16 MHz clock speed
- Reliable operation down to 1.8 V; 3.3 V nominal supply voltage
- Ultra−low−current sleep mode with Real−time Clock active (< 750 nA)
- Low−current standby mode with register and SRAM retention (< 26 μA)
- Integrated power supplies minimize need for external components. Only a minimum of external passives is required

Efficient, Powerful and Robust Processing Architecture

- 32−bit ARM Cortex−M3 CPU
- 256 kB on−chip flash with integrated hardware ECC for program and user data storage
- 48 kB on−chip SRAM
- Flexible DMA, 4 general−purpose timers, CRC calculator
- No external voltage required for flash write operation

Low−Noise, Low−Leakage, Low−Temperature Drift, Configurable Sensor Interface

- Triple ultra low−noise opamps with low−leakage inputs and configurable outputs
- Dual on−chip Programmable Gain Amplifiers (PGA) and ADCs with flexible input multiplexing and wide dynamic range
- Reconfigurable voltage detection unit
- Optimal dynamic range scaling of sensor signals
- Flexible on−chip signal routing for dynamic reconfigurability
- Minimal temperature drift of gain and offset errors allows for precise calibration
- Built−in Temperature Sensor

Predictable Operation

- Dedicated brown−out protection circuit prevents execution of code outside of operating range
- Integrated hardware−based ECC for on−chip flash maintains code and data integrity
- Watchdog timer

High Precision Analog−to−Digital Conversion and Digital−to−Analog Conversion

- Dual 16−bit ADCs with on−the−fly data rate configurability
- Triple 10−bit DACs with configurable dynamic range

Precision Voltage Reference

- On−chip, low temperature drift (< 50 ppm/°C) voltage reference for ADCs and DACs

Flexible On−Chip Clocking

- Processor supports speeds up to 16 MHz provided either through internal oscillator or externally supplied clock

Flexible Sensor Interconnections

- Triple low R_{on} analog multiplexers, including an 8:1 input mux
- Quad SPST and quad multi−switches for effective simultaneous connection to different sensors

USB 2.0 Full−Speed Interface

- Built−in transceiver for 2.0 Full−speed compatible (12 Mbps) operation with dedicated power supply

Flexible External Interfaes

- Configurable Interface Wakeup pins with configurable pull−ups and pull−downs
- 8 Configurable GPIO interrupts
- Dual UARTs, dual SPI, SQI, I^2C, PCM (including I2S mode), GPIOs

LCD Interface

- Up to 112 segments with integrated charge pump and backlight driver (up to 10 mA)

Packaging

- Available in 140−pin TLLGA

Programmable Gain Amplifier (PGA) allowing signals to be sampled without external buffering. The ADC data rate is reconfigurable and a wide range of data rates are possible. Each ADC conversion takes a fixed time resulting in a deterministic, periodic sampling. Lower data rates may be configured to achieve a higher effective dynamic range.

The ADCs operate rail ïto ïrail from 0 V to VADC (1.8 V) using the internal VREF Precision Voltage Reference (0.9 V). Unsigned or two's complement output samples are provided to the ARM Cortex ïM3 Processor and synchronized to the periodic ADC interrupt. The DMA may also be used to transfer samples directly from the ADC to SRAM.

Each PGA and ADC has 16 multiplexed inputs allowing a wide range of sensor interface signals to be measured. In addition, power supply voltages are available as measurement inputs for application level supply monitoring.

Programmable Gain Amplifiers

A PGA is used to directly feed each of the ADC inputs. The PGAs operate in either single ïended mode or differential mode. Single ïended operation is obtained by setting one PGA input to VSS. Differential operation is obtained by routing signals to each of the two PGA inputs. The resulting voltage is amplified, anti ïalias filtered, and output into the ADC. A wide range of gain steps from 0 dB to 36 dB allow for optimal adjustment of the PGA output to match the dynamic range of the ADC.

PGA1 operates in one of three input modes. Each input mode provides a different common ïmode voltage range with linearity characteristics and tradeoffs. The application may choose different PGA1 operating modes depending on the type of measurement being made. PGA0 operates in a single input mode only.

Automatic Voltage Detection

Automatic voltage detection is available on PGA0. When enabled, the PGA0 will output an interrupt to the ARM Cortex ïM3 Processor when the PGA0 output voltage exceeds the configured threshold. To save power the ADCs may be disabled while waiting for the detection signal.

Auxiliary Inputs

Three auxiliary inputs provide a direct connection to the PGA and ADC multiplexers. External voltages such as thermistor networks may be connected to any of these high impedance inputs for direct measurement with the ADC.

Triple DAC

Three independent 10 ïbit DACs are available. Each DAC output is individually controlled by the ARM Cortex ïM3 Processor. The DACs provide a high degree of linearity, low gain and offset temperature drift, and are monotonic within the normal operating range.

The dynamic range of DAC0 is reconfigurable. The 10 ïbit output range may be mapped into one of three ranges: 1 x VREF, 2 x VREF, or 3 x VREF. This reconfigurable dynamic mapping allows a tradeoff between LSB resolution and dynamic range.

The dynamic range of DAC1 and DAC2 is fixed to 2 x VREF.

Temperature Sensor

The device contains a built ïin temperature sensor. The temperature sensor works by generating a differential voltage that varies linearly with temperature. The voltage is routed into the PGA resulting in a single ïended output voltage measurable by the ADC.

The temperature sensor is calibrated during factory production by ON Semiconductor. The calibration value is stored in the flash. The device junction temperature may be determined based on the calibration factor and converted ADC output value.

SPST Switches

The device contains four analog general ïpurpose, low ïleakage, low ïRon, single ïpole single ïthrow switches (SPSTs). Each SPST consists of 2 ports – A and B. The SPST connection is determined by the application and may be changed in real ïtime. Port A can be connected or disconnected from Port B.

The SPSTs can be used for routing both power supplies and signals. Each SPST is designed to conduct a continuous current of up to ± 10 mA. This provides sufficient current bandwidth to supply power to external devices such as LCD displays or wireless transceivers.

When routing signals through the SPST, the low leakage characteristics allow the switch to create a high isolation between a measurement node and the sensor interface. The application may connect the measurement node to the sensor interface through the SPST as required. The ïlow leakage characteristics allow the SPST to be added to the signal chain without interfering with the impedance properties of the measurement node.

Multi ïSwitches

The device contains four analog general ïpurpose, low ïleakage, low ïRon multi ïswitches (MSWs). Each MSW consists of 3 ports – Port A, Port B, and Port C (Common). The MSW connection is determined by the application and may be changed in real ïtime. The MSW may be configured to connect A to C, B to C, A and B to C, or neither to C. A signal of interest may be connected to the common port, and selectively routed to A, B, or A and B. Alternately, two signals of interest may be connected to A and B, respectively, and either one selectively routed to C.

The MSWs may be used for routing both power supplies and signals. Each MSW is designed to conduct a continuous current of up to 10 mA. This provides sufficient current bandwidth to supply power to external devices such as LCD displays or wireless transceivers.

The MSWs may be configured to switch based on the on ïchip reconfigurable pulse ïwidth modulator (PWM).

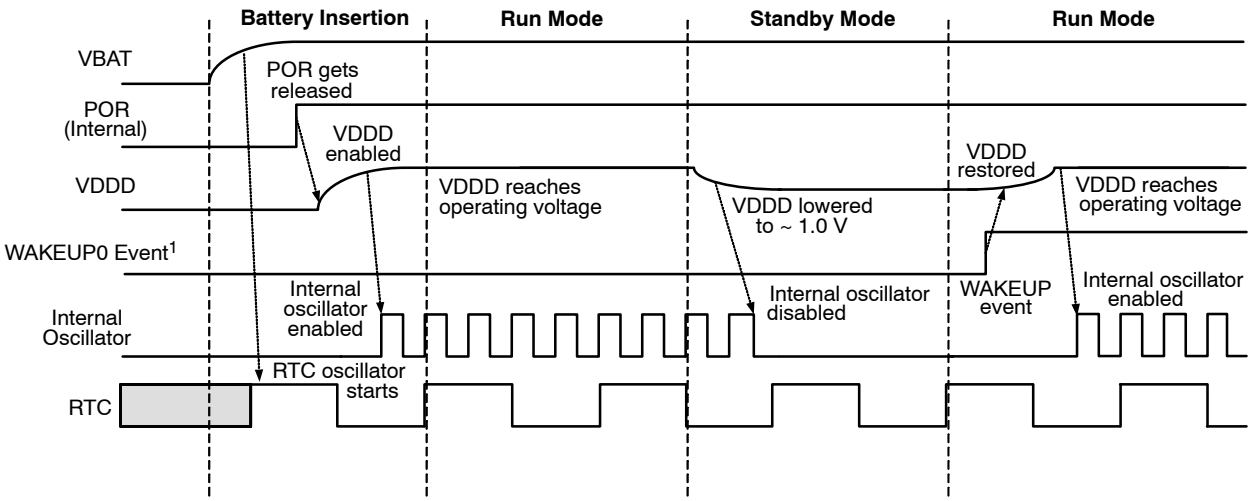

Figure 33. Entering Standby Mode

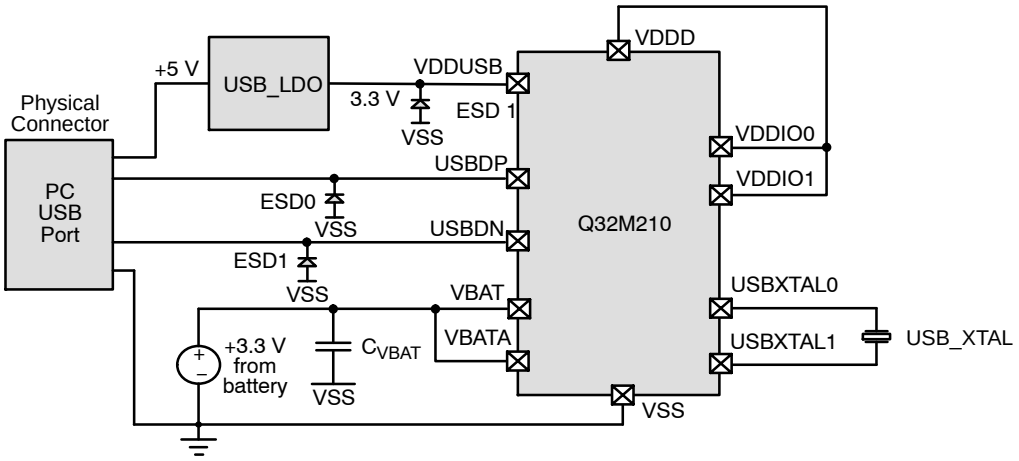

Figure 35. USB Application

Table 34. USB APPLICATION CONFIGURATION

Symbol	Description	Suggest Part Number	Recommended Value	Unit	Toler-ance
ESD0	USB ESD protection	ON Semiconductor NUP2201MR6T1 transient voltage suppressor			
ESD1	ESD Protection Diode	ON Semiconductor ESD9L3.3ST5G 15 kV (IEC 61000-4-2)			
USB_LDO	Low-dropout Regulator	ON Semiconductor NCV8560 - 3.3 V, 150 mA, LDO Regulator			
C_{VBAT}	VBAT supply filtering capacitor	0805 Taiyo Yuden JMK21213J226MG-T	22	μF	± 20%
USB_XTAL	USB Crystal	Abracon ABM10-48.000MHZ-E20-T NDK1612AA-48.000M	48	MHz	± 20 ppm

Software Development Support

Software development support for Q32M210 is provided in the Q32 Evaluation and Development Kit (EDK). The EDK is a full software development system built on an industry-standard development tool environment with customized components, system libraries, documentation, and sample code to support specialized application development. The EDK is included with the Evaluation and Development Board (with on−board JTAG) suitable for prototype software development and for evaluating Q32M210 with the supplied sample applications.

Out of the box, the EDK leverages IAR Embedded Workbench® for ARM as the baseline development and debug environment. The EDK installer can be used with any licensed version of the tools, or with the EWARM Kick Start Kit™ software release (included) for evaluation purposes.

The EDK contains sample source code demonstrating many of the on-board peripherals including I2C master and slave, UART, SPI, PCM, EEPROM access, Flash with CRC, analog subsystem, operating modes, and basic USB. Also included are USB HID (Human Interface Device) and MSC (Mass Storage Class) sample binaries leveraging the μC/USB™ software stack product from partner Micrium.

EDK documentation includes a Programmer's Guide, Hardware Reference which explains the Q32M210 hardware and configuration, Firmware Reference which details the supporting system firmware includes and libraries, the Evaluation and Development Board Manual which provides information for evaluation and prototyping using the accompanying development board, and ARM reference manuals.

PACKAGE DIMENSIONS

TLLGA140 10x10, 0.5P, Dual−Row, Staggered−Pad
CASE 513AL−01
ISSUE O

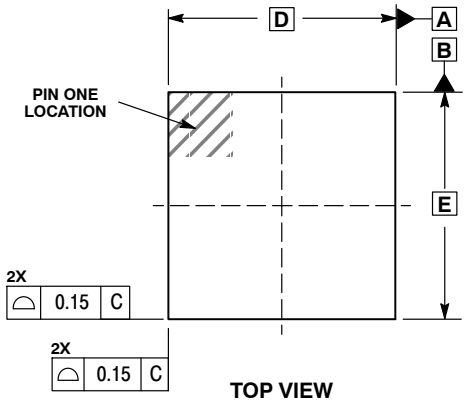

TOP VIEW

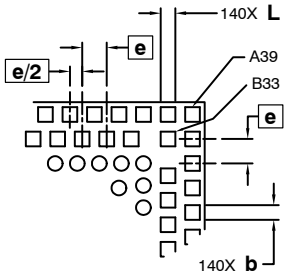

DETAIL A

NOTES:
1. DIMENSIONING AND TOLERANCING PER ASME Y14.5M, 1994.
2. CONTROLLING DIMENSION: MILLIMETERS
3. COPLANARITY APPLIES TO THE EXPOSED PAD AS WELL AS THE TERMINALS.

DIM	MILLIMETERS MIN	MAX
A	0.50	0.60
A1	---	0.05
b	0.25	0.35
D	10.00 BSC	
D2	5.70	5.90
E	10.00 BSC	
E2	5.70	5.90
e	0.50 BSC	
L	0.25	0.35

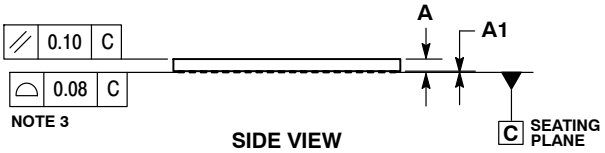

SIDE VIEW

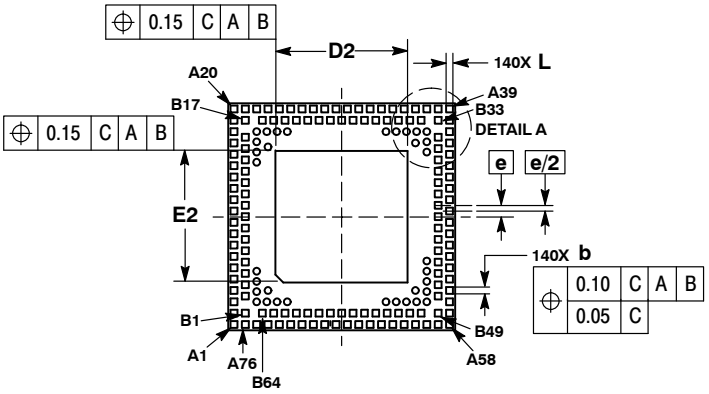

BOTTOM VIEW

RECOMMENDED SOLDERING FOOTPRINT*

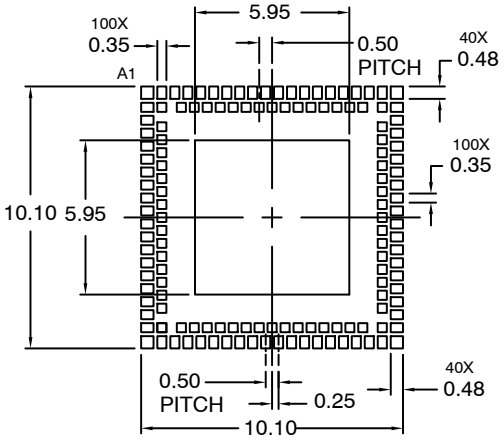

DIMENSION: MILLIMETERS

*For additional information on our Pb−Free strategy and soldering details, please download the ON Semiconductor Soldering and Mounting Techniques Reference Manual, SOLDERRM/D.