Welcome to E-XFL.COM

What is "Embedded - Microcontrollers"?

"Embedded - Microcontrollers" refer to small, integrated circuits designed to perform specific tasks within larger systems. These microcontrollers are essentially compact computers on a single chip, containing a processor core, memory, and programmable input/output peripherals. They are called "embedded" because they are embedded within electronic devices to control various functions, rather than serving as standalone computers. Microcontrollers are crucial in modern electronics, providing the intelligence and control needed for a wide range of applications.

Applications of "Embedded - Microcontrollers"

Details	
Product Status	Discontinued at Digi-Key
Core Processor	RX
Core Size	32-Bit Single-Core
Speed	32MHz
Connectivity	I²C, LINbus, SCI, SPI
Peripherals	DMA, LVD, POR, PWM, WDT
Number of I/O	52
Program Memory Size	256KB (256K x 8)
Program Memory Type	FLASH
EEPROM Size	8K x 8
RAM Size	32K x 8
Voltage - Supply (Vcc/Vdd)	1.8V ~ 5.5V
Data Converters	A/D 14x12b; D/A 2x8b
Oscillator Type	Internal
Operating Temperature	-40°C ~ 85°C (TA)
Mounting Type	Surface Mount
Package / Case	64-LQFP
Supplier Device Package	64-LQFP (14x14)
Purchase URL	https://www.e-xfl.com/product-detail/renesas-electronics-america/r5f51306adfk-30

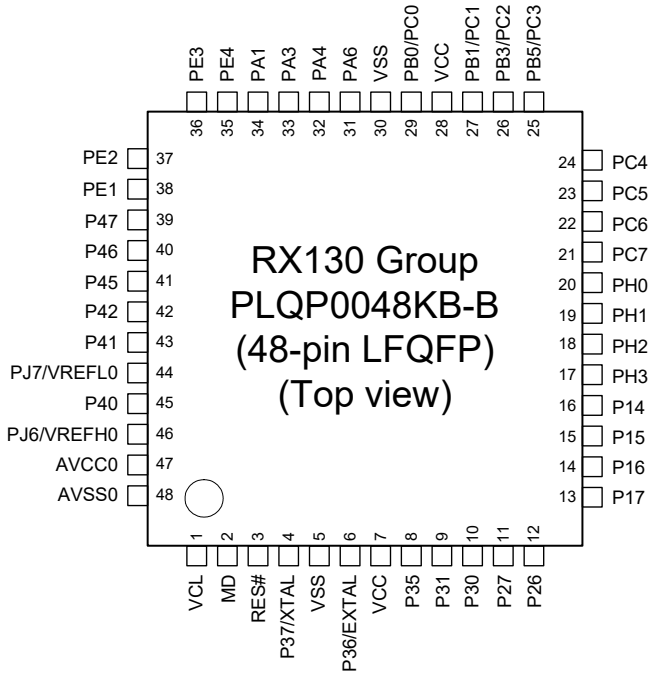

Note: This figure indicates the power supply pins and I/O ports.
For the pin configuration, see the table “List of Pins and Pin Functions (48-Pin LFQFP/HWQFN)”.

Figure 1.6 Pin Assignments of the 48-Pin LQFP

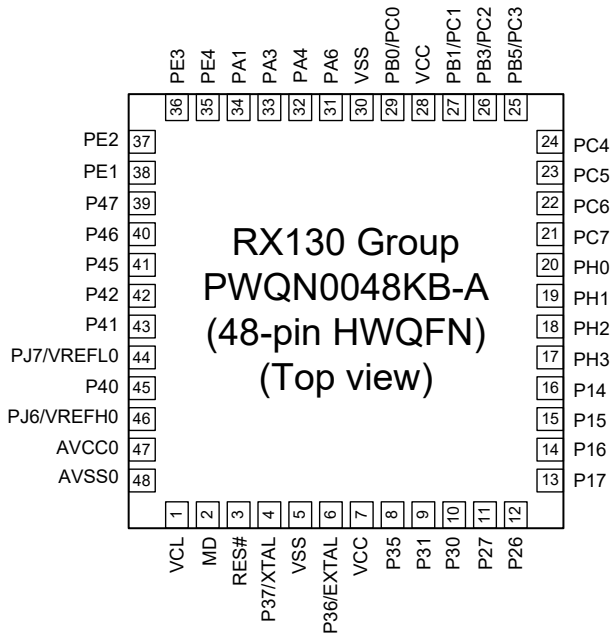

Note: It is recommended to connect an exposed die pad to VSS.
Note: This figure indicates the power supply pins and I/O ports.
For the pin configuration, see the table “List of Pins and Pin Functions (48-Pin LFQFP/HWQFN)”.

Figure 1.7 Pin Assignments of the 48-Pin HWQFN

Table 1.5 List of Pins and Pin Functions (100-Pin LFQFP) (2/2)

Pin No.	Power Supply, Clock, System Control	I/O Port	Timers (MTU, TMR, POE)	Communications (SCIg, SCIh, RSPI, RIIC, REMC)	Touch sensing	Others
53		PB7	MTIOC3B	TXD9/SMOSI9/SSDA9	TS18	
54		PB6	MTIOC3D	RXD9/SMISO9/SSCL9	TS19	
55		PB5	MTIOC2A/MTIOC1B/TMRI1/POE1#	SCK9	TS20	
56		PB4		CTS9#/RTS9#/SS9#	TS21	
57		PB3	MTIOC0A/MTIOC4A/TMO0/POE3#	SCK6	TS22	
58		PB2		CTS6#/RTS6#/SS6#	TS23	
59		PB1	MTIOC0C/MTIOC4C/TMCI0	TXD6/SMOSI6/SSDA6	TS24	IRQ4/CMPOB1
60	VCC					
61		PB0	MTIC5W	RXD6/SMISO6/SSCL6/RSPCKA	TS25	
62	VSS					
63		PA7		MISOA		
64		PA6	MTIC5V/MTCLKB/TMCI3/POE2#	CTS5#/RTS5#/SS5#/MOSIA	TS26	
65		PA5		RSPCKA	TS27	
66		PA4	MTIC5U/MTCLKA/TMRI0	TXD5/SMOSI5/SSDA5/SSLA0	TS28	IRQ5/CVREFB1
67		PA3	MTIOC0D/MTCLKD	RXD5/SMISO5/SSCL5	TS29	IRQ6/CMPB1
68		PA2		RXD5/SMISO5/SSCL5/SSLA3	TS30	
69		PA1	MTIOC0B/MTCLKC	SCK5/SSLA2	TS31	
70		PA0	MTIOC4A	SSLA1	TS32	CACREF
71		PE7				IRQ7/AN023
72		PE6				IRQ6/AN022
73		PE5	MTIOC4C/MTIOC2B			IRQ5/AN021/CMPOB0
74		PE4	MTIOC4D/MTIOC1A		TS33	AN020/CMPA2/CLKOUT
75		PE3	MTIOC4B/POE8#	CTS12#/RTS12#/SS12#	TS34	AN019/CLKOUT
76		PE2	MTIOC4A	RXD12/RXDX12/SMISO12/SSCL12	TS35	IRQ7/AN018/CVREFB0
77		PE1	MTIOC4C	TXD12/TXDX12/SIOX12/SMOSI12/SSDA12		AN017/CMPB0
78		PE0		SCK12		AN016
79		PD7	MTIC5U/POE0#			IRQ7/AN031
80		PD6	MTIC5V/POE1#			IRQ6/AN030
81		PD5	MTIC5W/POE2#			IRQ5/AN029
82		PD4	POE3#			IRQ4/AN028
83		PD3	POE8#			IRQ3/AN027
84		PD2	MTIOC4D	SCK6		IRQ2/AN026
85		PD1	MTIOC4B	RXD6/SMISO6/SSCL6		IRQ1/AN025
86		PD0		TXD6/SMOSI6/SSDA6		IRQ0/AN024
87		P47*1				AN007
88		P46*1				AN006
89		P45*1				AN005
90		P44*1				AN004
91		P43*1				AN003
92		P42*1				AN002
93		P41*1				AN001
94	VREFL0	PJ7*1				
95		P40*1				AN000
96	VREFH0	PJ6*1				
97	AVCC0					
98		P07*1				ADTRG0#
99	AVSS0					
100		P05*1				DA1

Note 1. The power source of the I/O buffer for these pins is AVCC0.

Table 4.1 List of I/O Registers (Address Order) (8 / 18)

Address	Module Symbol	Register Name	Register Symbol	Number of Bits	Access Size	Number of Access Cycles
0008 90E4h	S12AD	A/D Sampling State Register 4	ADSSTR4	8	8	2 or 3 PCLKB
0008 90E5h	S12AD	A/D Sampling State Register 5	ADSSTR5	8	8	2 or 3 PCLKB
0008 90E6h	S12AD	A/D Sampling State Register 6	ADSSTR6	8	8	2 or 3 PCLKB
0008 90E7h	S12AD	A/D Sampling State Register 7	ADSSTR7	8	8	2 or 3 PCLKB
0008 A000h	SCI0	Serial Mode Register	SMR	8	8	2 or 3 PCLKB
0008 A001h	SCI0	Bit Rate Register	BRR	8	8	2 or 3 PCLKB
0008 A002h	SCI0	Serial Control Register	SCR	8	8	2 or 3 PCLKB
0008 A003h	SCI0	Transmit Data Register	TDR	8	8	2 or 3 PCLKB
0008 A004h	SCI0	Serial Status Register	SSR	8	8	2 or 3 PCLKB
0008 A005h	SCI0	Receive Data Register	RDR	8	8	2 or 3 PCLKB
0008 A006h	SMCI0	Smart Card Mode Register	SCMR	8	8	2 or 3 PCLKB
0008 A007h	SCI0	Serial Extended Mode Register	SEMR	8	8	2 or 3 PCLKB
0008 A008h	SCI0	Noise Filter Setting Register	SNFR	8	8	2 or 3 PCLKB
0008 A009h	SCI0	I^2C Mode Register 1	SIMR1	8	8	2 or 3 PCLKB
0008 A00Ah	SCI0	I^2C Mode Register 2	SIMR2	8	8	2 or 3 PCLKB
0008 A00Bh	SCI0	I^2C Mode Register 3	SIMR3	8	8	2 or 3 PCLKB
0008 A00Ch	SCI0	I^2C Status Register	SISR	8	8	2 or 3 PCLKB
0008 A00Dh	SCI0	SPI Mode Register	SPMR	8	8	2 or 3 PCLKB
0008 A00Eh	SCI0	Transmit Data Register HL	TDRHL	16	16	2 or 3 PCLKB
0008 A00Eh	SCI0	Transmit Data Register H	TDRH	8	8	2 or 3 PCLKB
0008 A00Fh	SCI0	Transmit Data Register L	TDRL	8	8	2 or 3 PCLKB
0008 A010h	SCI0	Receive Data Register HL	RDRHL	16	16	2 or 3 PCLKB
0008 A010h	SCI0	Receive Data Register H	RDRH	8	8	2 or 3 PCLKB
0008 A011h	SCI0	Receive Data Register L	RDRL	8	8	2 or 3 PCLKB
0008 A012h	SCI0	Modulation Duty Register	MDDR	8	8	2 or 3 PCLKB
0008 A020h	SCI1	Serial Mode Register	SMR	8	8	2 or 3 PCLKB
0008 A021h	SCI1	Bit Rate Register	BRR	8	8	2 or 3 PCLKB
0008 A022h	SCI1	Serial Control Register	SCR	8	8	2 or 3 PCLKB
0008 A023h	SCI1	Transmit Data Register	TDR	8	8	2 or 3 PCLKB
0008 A024h	SCI1	Serial Status Register	SSR	8	8	2 or 3 PCLKB
0008 A025h	SCI1	Receive Data Register	RDR	8	8	2 or 3 PCLKB
0008 A026h	SMCI1	Smart Card Mode Register	SCMR	8	8	2 or 3 PCLKB
0008 A027h	SCI1	Serial Extended Mode Register	SEMR	8	8	2 or 3 PCLKB
0008 A028h	SCI1	Noise Filter Setting Register	SNFR	8	8	2 or 3 PCLKB
0008 A029h	SCI1	I^2C Mode Register 1	SIMR1	8	8	2 or 3 PCLKB
0008 A02Ah	SCI1	I^2C Mode Register 2	SIMR2	8	8	2 or 3 PCLKB
0008 A02Bh	SCI1	I^2C Mode Register 3	SIMR3	8	8	2 or 3 PCLKB
0008 A02Ch	SCI1	I^2C Status Register	SISR	8	8	2 or 3 PCLKB
0008 A02Dh	SCI1	SPI Mode Register	SPMR	8	8	2 or 3 PCLKB
0008 A02Eh	SCI1	Transmit Data Register HL	TDRHL	16	16	2 or 3 PCLKB
0008 A02Eh	SCI1	Transmit Data Register H	TDRH	8	8	2 or 3 PCLKB
0008 A02Fh	SCI1	Transmit Data Register L	TDRL	8	8	2 or 3 PCLKB
0008 A030h	SCI1	Receive Data Register HL	RDRHL	16	16	2 or 3 PCLKB
0008 A030h	SCI1	Receive Data Register H	RDRH	8	8	2 or 3 PCLKB
0008 A031h	SCI1	Receive Data Register L	RDRL	8	8	2 or 3 PCLKB
0008 A032h	SCI1	Modulation Duty Register	MDDR	8	8	2 or 3 PCLKB
0008 A0A0h	SCI5	Serial Mode Register	SMR	8	8	2 or 3 PCLKB
0008 A0A1h	SCI5	Bit Rate Register	BRR	8	8	2 or 3 PCLKB
0008 A0A2h	SCI5	Serial Control Register	SCR	8	8	2 or 3 PCLKB
0008 A0A3h	SCI5	Transmit Data Register	TDR	8	8	2 or 3 PCLKB
0008 A0A4h	SCI5	Serial Status Register	SSR	8	8	2 or 3 PCLKB
0008 A0A5h	SCI5	Receive Data Register	RDR	8	8	2 or 3 PCLKB

Table 4.1 List of I/O Registers (Address Order) (11 / 18)

Address	Module Symbol	Register Name	Register Symbol	Number of Bits	Access Size	Number of Access Cycles
0008 B119h	ELC	Event Link Setting Register 24	ELSR24	8	8	2 or 3 PCLKB
0008 B11Ah	ELC	Event Link Setting Register 25	ELSR25	8	8	2 or 3 PCLKB
0008 B11Fh	ELC	Event Link Option Setting Register A	ELOPA	8	8	2 or 3 PCLKB
0008 B120h	ELC	Event Link Option Setting Register B	ELOPB	8	8	2 or 3 PCLKB
0008 B121h	ELC	Event Link Option Setting Register C	ELOPC	8	8	2 or 3 PCLKB
0008 B122h	ELC	Event Link Option Setting Register D	ELOPD	8	8	2 or 3 PCLKB
0008 B123h	ELC	Port Group Setting Register 1	PGR1	8	8	2 or 3 PCLKB
0008 B125h	ELC	Port Group Control Register 1	PGC1	8	8	2 or 3 PCLKB
0008 B127h	ELC	Port Buffer Register 1	PDBF1	8	8	2 or 3 PCLKB
0008 B129h	ELC	Event Link Port Setting Register 0	PEL0	8	8	2 or 3 PCLKB
0008 B12Ah	ELC	Event Link Port Setting Register 1	PEL1	8	8	2 or 3 PCLKB
0008 B12Dh	ELC	Event Link Software Event Generation Register	ELSEGR	8	8	2 or 3 PCLKB
0008 B300h	SCI12	Serial Mode Register	SMR	8	8	2 or 3 PCLKB
0008 B301h	SCI12	Bit Rate Register	BRR	8	8	2 or 3 PCLKB
0008 B302h	SCI12	Serial Control Register	SCR	8	8	2 or 3 PCLKB
0008 B303h	SCI12	Transmit Data Register	TDR	8	8	2 or 3 PCLKB
0008 B304h	SCI12	Serial Status Register	SSR	8	8	2 or 3 PCLKB
0008 B305h	SCI12	Receive Data Register	RDR	8	8	2 or 3 PCLKB
0008 B306h	SMCI12	Smart Card Mode Register	SCMR	8	8	2 or 3 PCLKB
0008 B307h	SCI12	Serial Extended Mode Register	SEMR	8	8	2 or 3 PCLKB
0008 B308h	SCI12	Noise Filter Setting Register	SNFR	8	8	2 or 3 PCLKB
0008 B309h	SCI12	I^2C Mode Register 1	SIMR1	8	8	2 or 3 PCLKB
0008 B30Ah	SCI12	I^2C Mode Register 2	SIMR2	8	8	2 or 3 PCLKB
0008 B30Bh	SCI12	I^2C Mode Register 3	SIMR3	8	8	2 or 3 PCLKB
0008 B30Ch	SCI12	I^2C Status Register	SISR	8	8	2 or 3 PCLKB
0008 B30Dh	SCI12	SPI Mode Register	SPMR	8	8	2 or 3 PCLKB
0008 B30Eh	SCI12	Transmit Data Register HL	TDRHL	16	16	2 or 3 PCLKB
0008 B30Eh	SCI12	Transmit Data Register H	TDRH	8	8	2 or 3 PCLKB
0008 B30Fh	SCI12	Transmit Data Register L	TDRL	8	8	2 or 3 PCLKB
0008 B310h	SCI12	Receive Data Register HL	RDRHL	16	16	2 or 3 PCLKB
0008 B310h	SCI12	Receive Data Register H	RDRH	8	8	2 or 3 PCLKB
0008 B311h	SCI12	Receive Data Register L	RDRL	8	8	2 or 3 PCLKB
0008 B312h	SCI12	Modulation Duty Register	MDDR	8	8	2 or 3 PCLKB
0008 B320h	SCI12	Extended Serial Module Enable Register	ESMER	8	8	2 or 3 PCLKB
0008 B321h	SCI12	Control Register 0	CR0	8	8	2 or 3 PCLKB
0008 B322h	SCI12	Control Register 1	CR1	8	8	2 or 3 PCLKB
0008 B323h	SCI12	Control Register 2	CR2	8	8	2 or 3 PCLKB
0008 B324h	SCI12	Control Register 3	CR3	8	8	2 or 3 PCLKB
0008 B325h	SCI12	Port Control Register	PCR	8	8	2 or 3 PCLKB
0008 B326h	SCI12	Interrupt Control Register	ICR	8	8	2 or 3 PCLKB
0008 B327h	SCI12	Status Register	STR	8	8	2 or 3 PCLKB
0008 B328h	SCI12	Status Clear Register	STCR	8	8	2 or 3 PCLKB
0008 B329h	SCI12	Control Field 0 Data Register	CF0DR	8	8	2 or 3 PCLKB
0008 B32Ah	SCI12	Control Field 0 Compare Enable Register	CF0CR	8	8	2 or 3 PCLKB
0008 B32Bh	SCI12	Control Field 0 Receive Data Register	CF0RR	8	8	2 or 3 PCLKB
0008 B32Ch	SCI12	Primary Control Field 1 Data Register	PCF1DR	8	8	2 or 3 PCLKB
0008 B32Dh	SCI12	Secondary Control Field 1 Data Register	SCF1DR	8	8	2 or 3 PCLKB
0008 B32Eh	SCI12	Control Field 1 Compare Enable Register	CF1CR	8	8	2 or 3 PCLKB
0008 B32Fh	SCI12	Control Field 1 Receive Data Register	CF1RR	8	8	2 or 3 PCLKB
0008 B330h	SCI12	Timer Control Register	TCR	8	8	2 or 3 PCLKB
0008 B331h	SCI12	Timer Mode Register	TMR	8	8	2 or 3 PCLKB
0008 B332h	SCI12	Timer Prescaler Register	TPRE	8	8	2 or 3 PCLKB

Table 4.1 List of I/O Registers (Address Order) (15 / 18)

Address	Module Symbol	Register Name	Register Symbol	Number of Bits	Access Size	Number of Access Cycles
0008 C1A4h	MPC	PC4 Pin Function Control Register	PC4PFS	8	8	2 or 3 PCLKB
0008 C1A5h	MPC	PC5 Pin Function Control Register	PC5PFS	8	8	2 or 3 PCLKB
0008 C1A6h	MPC	PC6 Pin Function Control Register	PC6PFS	8	8	2 or 3 PCLKB
0008 C1A7h	MPC	PC7 Pin Function Control Register	PC7PFS	8	8	2 or 3 PCLKB
0008 C1A8h	MPC	PD0 Pin Function Control Register	PD0PFS	8	8	2 or 3 PCLKB
0008 C1A9h	MPC	PD1 Pin Function Control Register	PD1PFS	8	8	2 or 3 PCLKB
0008 C1AAh	MPC	PD2 Pin Function Control Register	PD2PFS	8	8	2 or 3 PCLKB
0008 C1ABh	MPC	PD3 Pin Function Control Register	PD3PFS	8	8	2 or 3 PCLKB
0008 C1ACh	MPC	PD4 Pin Function Control Register	PD4PFS	8	8	2 or 3 PCLKB
0008 C1ADh	MPC	PD5 Pin Function Control Register	PD5PFS	8	8	2 or 3 PCLKB
0008 C1AEh	MPC	PD6 Pin Function Control Register	PD6PFS	8	8	2 or 3 PCLKB
0008 C1AFh	MPC	PD7 Pin Function Control Register	PD7PFS	8	8	2 or 3 PCLKB
0008 C1B0h	MPC	PE0 Pin Function Control Register	PE0PFS	8	8	2 or 3 PCLKB
0008 C1B1h	MPC	PE1 Pin Function Control Register	PE1PFS	8	8	2 or 3 PCLKB
0008 C1B2h	MPC	PE2 Pin Function Control Register	PE2PFS	8	8	2 or 3 PCLKB
0008 C1B3h	MPC	PE3 Pin Function Control Register	PE3PFS	8	8	2 or 3 PCLKB
0008 C1B4h	MPC	PE4 Pin Function Control Register	PE4PFS	8	8	2 or 3 PCLKB
0008 C1B5h	MPC	PE5 Pin Function Control Register	PE5PFS	8	8	2 or 3 PCLKB
0008 C1B6h	MPC	PE6 Pin Function Control Register	PE6PFS	8	8	2 or 3 PCLKB
0008 C1B7h	MPC	PE7 Pin Function Control Register	PE7PFS	8	8	2 or 3 PCLKB
0008 C1C8h	MPC	PH0 Pin Function Control Register	PH0PFS	8	8	2 or 3 PCLKB
0008 C1C9h	MPC	PH1 Pin Function Control Register	PH1PFS	8	8	2 or 3 PCLKB
0008 C1CAh	MPC	PH2 Pin Function Control Register	PH2PFS	8	8	2 or 3 PCLKB
0008 C1CBh	MPC	PH3 Pin Function Control Register	PH3PFS	8	8	2 or 3 PCLKB
0008 C1D1h	MPC	PJ1 Pin Function Control Register	PJ1PFS	8	8	2 or 3 PCLKB
0008 C1D3h	MPC	PJ3 Pin Function Control Register	PJ3PFS	8	8	2 or 3 PCLKB
0008 C1D6h	MPC	PJ6 Pin Function Control Register	PJ6PFS	8	8	2 or 3 PCLKB
0008 C1D7h	MPC	PJ7 Pin Function Control Register	PJ7PFS	8	8	2 or 3 PCLKB
0008 C290h	SYSTEM	Reset Status Register 0	RSTSR0	8	8	4 or 5 PCLKB
0008 C291h	SYSTEM	Reset Status Register 1	RSTSR1	8	8	4 or 5 PCLKB
0008 C293h	SYSTEM	Main Clock Oscillator Forced Oscillation Control Register	MOFCR	8	8	4 or 5 PCLKB
0008 C297h	SYSTEM	Voltage Monitoring Circuit Control Register	LVCMPCR	8	8	4 or 5 PCLKB
0008 C298h	SYSTEM	Voltage Detection Level Select Register	LVDLVLR	8	8	4 or 5 PCLKB
0008 C29Ah	SYSTEM	Voltage Monitoring 1 Circuit Control Register 0	LVD1CR0	8	8	4 or 5 PCLKB
0008 C29Bh	SYSTEM	Voltage Monitoring 2 Circuit Control Register 0	LVD2CR0	8	8	4 or 5 PCLKB
0008 C400h	RTC	64-Hz Counter	R64CNT	8	8	2 or 3 PCLKB
0008 C402h	RTC	Second Counter	RSECCNT	8	8	2 or 3 PCLKB
0008 C402h	RTC	Binary Counter 0	BCNT0	8	8	2 or 3 PCLKB
0008 C404h	RTC	Minute Counter	RMINCNT	8	8	2 or 3 PCLKB
0008 C404h	RTC	Binary Counter 1	BCNT1	8	8	2 or 3 PCLKB
0008 C406h	RTC	Hour Counter	RHRCNT	8	8	2 or 3 PCLKB
0008 C406h	RTC	Binary Counter 2	BCNT2	8	8	2 or 3 PCLKB
0008 C408h	RTC	Day-of-Week Counter	RWKCNT	8	8	2 or 3 PCLKB
0008 C408h	RTC	Binary Counter 3	BCNT3	8	8	2 or 3 PCLKB
0008 C40Ah	RTC	Date Counter	RDAYCNT	8	8	2 or 3 PCLKB
0008 C40Ch	RTC	Month Counter	RMONCNT	8	8	2 or 3 PCLKB
0008 C40Eh	RTC	Year Counter	RYRCNT	16	16	2 or 3 PCLKB
0008 C410h	RTC	Second Alarm Register	RSECAR	8	8	2 or 3 PCLKB
0008 C410h	RTC	Binary Counter 0 Alarm Register	BCNT0AR	8	8	2 or 3 PCLKB
0008 C412h	RTC	Minute Alarm Register	RMINAR	8	8	2 or 3 PCLKB
0008 C412h	RTC	Binary Counter 1 Alarm Register	BCNT1AR	8	8	2 or 3 PCLKB
0008 C414h	RTC	Hour Alarm Register	RHRAR	8	8	2 or 3 PCLKB

Table 4.1 List of I/O Registers (Address Order) (17 / 18)

Address	Module Symbol	Register Name	Register Symbol	Number of Bits	Access Size	Number of Access Cycles
000A 0B05h	REMC0	Compare Value Setting Register	REMCPD	8	8	1 or 2 PCLKB
000A 0B06h	REMC0	Header Pattern Minimum Width Setting Register	HDPMIN	16	16	1 or 2 PCLKB
000A 0B08h	REMC0	Header Pattern Maximum Width Setting Register	HDPMAX	16	16	1 or 2 PCLKB
000A 0B0Ah	REMC0	Data ‘0’ Pattern Minimum Width Setting Register	D0PMIN	8	8	1 or 2 PCLKB
000A 0B0Bh	REMC0	Data ‘0’ Pattern Maximum Width Setting Register	D0PMAX	8	8	1 or 2 PCLKB
000A 0B0Ch	REMC0	Data ‘1’ Pattern Minimum Width Setting Register	D1PMIN	8	8	1 or 2 PCLKB
000A 0B0Dh	REMC0	Data ‘1’ Pattern Maximum Width Setting Register	D1PMAX	8	8	1 or 2 PCLKB
000A 0B0Eh	REMC0	Special Data Pattern Minimum Width Setting Register	SDPMIN	16	16	1 or 2 PCLKB
000A 0B10h	REMC0	Special Data Pattern Maximum Width Setting Register	SDPMAX	16	16	1 or 2 PCLKB
000A 0B12h	REMC0	Pattern End Setting Register	REMPE	16	16	1 or 2 PCLKB
000A 0B14h	REMC0	Reception Standby Control Register	REMSTC	8	8	1 or 2 PCLKB
000A 0B15h	REMC0	Receive Bit Count Register	REMRBIT	8	8	1 or 2 PCLKB
000A 0B16h	REMC0	Receive Data 0 Register	REMDAT0	8	8	1 or 2 PCLKB
000A 0B17h	REMC0	Receive Data 1 Register	REMDAT1	8	8	1 or 2 PCLKB
000A 0B18h	REMC0	Receive Data 2 Register	REMDAT2	8	8	1 or 2 PCLKB
000A 0B19h	REMC0	Receive Data 3 Register	REMDAT3	8	8	1 or 2 PCLKB
000A 0B1Ah	REMC0	Receive Data 4 Register	REMDAT4	8	8	1 or 2 PCLKB
000A 0B1Bh	REMC0	Receive Data 5 Register	REMDAT5	8	8	1 or 2 PCLKB
000A 0B1Ch	REMC0	Receive Data 6 Register	REMDAT6	8	8	1 or 2 PCLKB
000A 0B1Dh	REMC0	Receive Data 7 Register	REMDAT7	8	8	1 or 2 PCLKB
000A 0B1Eh	REMC0	Measurement Result Register	REMTIM	16	16	1 or 2 PCLKB
000A 0B80h	REMC1	Function Select Register 0	REMCON0	8	8	1 or 2 PCLKB
000A 0B81h	REMC1	Function Select Register 1	REMCON1	8	8	1 or 2 PCLKB
000A 0B82h	REMC1	Status Register	REMSTS	8	8	1 or 2 PCLKB
000A 0B83h	REMC1	Interrupt Control Register	REMINT	8	8	1 or 2 PCLKB
000A 0B84h	REMC1	Compare Control Register	REMCPC	8	8	1 or 2 PCLKB
000A 0B85h	REMC1	Compare Value Setting Register	REMCPD	8	8	1 or 2 PCLKB
000A 0B86h	REMC1	Header Pattern Minimum Width Setting Register	HDPMIN	16	16	1 or 2 PCLKB
000A 0B88h	REMC1	Header Pattern Maximum Width Setting Register	HDPMAX	16	16	1 or 2 PCLKB
000A 0B8Ah	REMC1	Data ‘0’ Pattern Minimum Width Setting Register	D0PMIN	8	8	1 or 2 PCLKB
000A 0B8Bh	REMC1	Data ‘0’ Pattern Maximum Width Setting Register	D0PMAX	8	8	1 or 2 PCLKB
000A 0B8Ch	REMC1	Data ‘1’ Pattern Minimum Width Setting Register	D1PMIN	8	8	1 or 2 PCLKB
000A 0B8Dh	REMC1	Data ‘1’ Pattern Maximum Width Setting Register	D1PMAX	8	8	1 or 2 PCLKB
000A 0B8Eh	REMC1	Special Data Pattern Minimum Width Setting Register	SDPMIN	16	16	1 or 2 PCLKB
000A 0B90h	REMC1	Special Data Pattern Maximum Width Setting Register	SDPMAX	16	16	1 or 2 PCLKB
000A 0B92h	REMC1	Pattern End Setting Register	REMPE	16	16	1 or 2 PCLKB
000A 0B94h	REMC1	Reception Standby Control Register	REMSTC	8	8	1 or 2 PCLKB
000A 0B95h	REMC1	Receive Bit Count Register	REMRBIT	8	8	1 or 2 PCLKB
000A 0B96h	REMC1	Receive Data 0 Register	REMDAT0	8	8	1 or 2 PCLKB
000A 0B97h	REMC1	Receive Data 1 Register	REMDAT1	8	8	1 or 2 PCLKB
000A 0B98h	REMC1	Receive Data 2 Register	REMDAT2	8	8	1 or 2 PCLKB
000A 0B99h	REMC1	Receive Data 3 Register	REMDAT3	8	8	1 or 2 PCLKB
000A 0B9Ah	REMC1	Receive Data 4 Register	REMDAT4	8	8	1 or 2 PCLKB
000A 0B9Bh	REMC1	Receive Data 5 Register	REMDAT5	8	8	1 or 2 PCLKB
000A 0B9Ch	REMC1	Receive Data 6 Register	REMDAT6	8	8	1 or 2 PCLKB
000A 0B9Dh	REMC1	Receive Data 7 Register	REMDAT7	8	8	1 or 2 PCLKB
000A 0B9Eh	REMC1	Measurement Result Register	REMTIM	16	16	1 or 2 PCLKB
000A 0C00h	REMCOM	HOCO Clock Supply Control Register	HOSCR	8	8	1 or 2 PCLKB
007F C090h	FLASH	E2 DataFlash Control Register	DFLCTL	8	8	2 or 3 FCLK
007F C0ACh	TEMPS	Temperature Sensor Calibration Data Register	TSCDRL	8	8	2 or 3 FCLK
007F C0ADh	TEMPS	Temperature Sensor Calibration Data Register	TSCDRH	8	8	2 or 3 FCLK
007F C0B0h	FLASH	Flash Start-Up Setting Monitor Register	FSCMR	16	16	2 or 3 FCLK

Item					Symbol	Typ.	Max.	Unit	Test Conditions
Supply current*1	Middle-speed operating modes	Deep sleep mode	No peripheral operation*6	ICLK = 12 MHz	I_{CC}	1.0	—	mA	
				ICLK = 8 MHz		0.7	—		
				ICLK = 4 MHz		0.2	—		
				ICLK = 1 MHz		0.1	—		
			All peripheral operation: Normal*7	ICLK = 12 MHz		2.3	—		
				ICLK = 8 MHz		1.6	—		
				ICLK = 4 MHz		1.0	—		
				ICLK = 1 MHz		0.7	—		
		Increase during flash rewrite*5				2.5	—		
	Low-speed operating mode	Normal operating mode	No peripheral operation*8	ICLK = 32.768 kHz	I_{CC}	3.8	—	μA	
			All peripheral operation: Normal*10	ICLK = 32.768 kHz		10.9	—		
			All peripheral operation: Max.*10	ICLK = 32.768 kHz		—	29.2		
		Sleep mode	No peripheral operation*8	ICLK = 32.768 kHz		2.1	—		
			All peripheral operation: Normal*9	ICLK = 32.768 kHz		6.0	—		
		Deep sleep mode	No peripheral operation*8	ICLK = 32.768 kHz		1.6	—		
			All peripheral operation: Normal*9	ICLK = 32.768 kHz		5.0	—		

Note 1. Supply current values do not include output charge/discharge current from all pins. The values apply when internal pull-up MOSs are in the off state.
Note 2. Clock supply to the peripheral functions is stopped. This does not include BGO operation. The clock source is PLL. FCLK and PCLK are set to divided by 64.
Note 3. Clocks are supplied to the peripheral functions. This does not include BGO operation. The clock source is PLL. FCLK and PCLK are set to the same frequency as ICLK.
Note 4. Values when VCC = 3.3 V.
Note 5. This is the increase for programming or erasure of the ROM or E2 DataFlash during program execution.
Note 6. Clock supply to the peripheral function is stopped. The clock source is PLL when ICLK is 12 MHz, HOCO when ICLK is 8 MHz, and LOCO otherwise. FCLK and PCLK are set to divided by 64.
Note 7. Clocks are supplied to the peripheral functions. The clock source is PLL when ICLK is 12 MHz, HOCO when ICLK is (MHz, and LOCO otherwise. FCLK and PCLK are set to the same frequency as ICLK.
Note 8. Clock supply to the peripheral functions is stopped. The clock source is the sub-clock oscillator. FCLK and PCLK are set to divided by 64.
Note 9. Clocks are supplied to the peripheral functions. The clock source is the sub-clock oscillator. FCLK and PCLK are set to the same frequency as ICLK.
Note 10. Values when the MSTPCRA.MSTPA17 bit (12-bit A/D converter module stop bit) is set to “transition to the module stop state is made”.

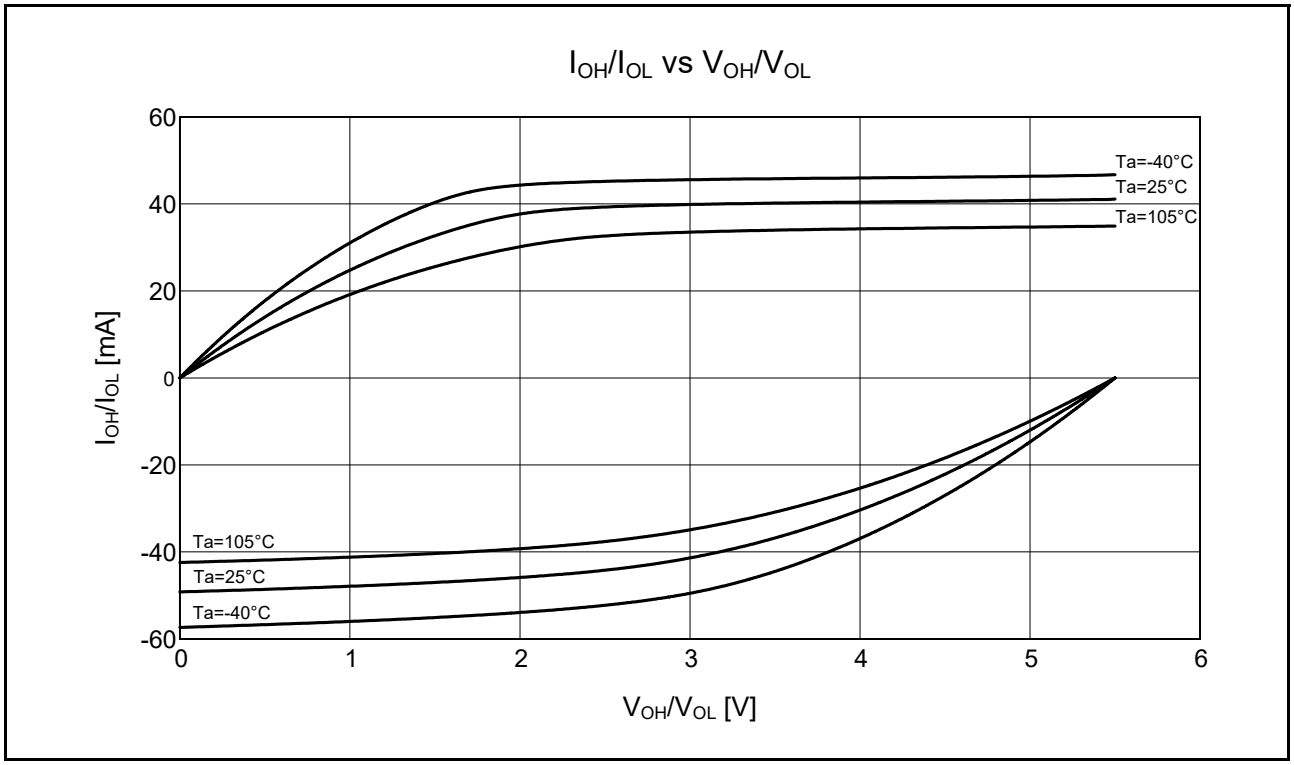

Figure 5.16 **V_{OH}/V_{OL} and I_{OH}/I_{OL} Temperature Characteristics at VCC = 5.5 V When Normal Output is Selected (Reference Data)**

5.3 AC Characteristics

5.3.1 Clock Timing

Table 5.22 Operating Frequency Value (High-Speed Operating Mode)

Conditions: 1.8 V ≤ VCC = AVCC0 < 2.0 V, 2.0 V ≤ VCC ≤ 5.5 V, 2.0 V ≤ AVCC0 ≤ 5.5 V, VSS = AVSS0 = 0 V, Ta = –40 to +105°C

Item		Symbol	VCC			Unit
			1.8 V ≤ VCC < 2.4 V	2.4 V ≤ VCC < 2.7 V	2.7 V ≤ VCC ≤ 5.5 V	
Maximum operating frequency*4	System clock (ICLK)	f_{max}	8	16	32	MHz
	FlashIF clock (FCLK)*1, *2		8	16	32	
	Peripheral module clock (PCLKB)		8	16	32	
	Peripheral module clock (PCLKD)*3		8	16	32	

Note 1. The lower-limit frequency of FCLK is 1 MHz during programming or erasing of the flash memory. When using FCLK at below 4 MHz, the frequency can be set to 1 MHz, 2 MHz, or 3 MHz. A non-integer frequency such as 1.5 MHz cannot be set.
Note 2. The frequency accuracy of FCLK should be ±3.5%.
Note 3. The lower-limit frequency of PCLKD is 4 MHz at 2.4 V or above and 1 MHz at below 2.4 V when the A/D converter is in use.
Note 4. The maximum operating frequency does not include HOCO error or PLL jitter. See Table 5.25, Clock Timing.

Table 5.23 Operating Frequency Value (Middle-Speed Operating Mode)

Conditions: 1.8 V ≤ VCC = AVCC0 < 2.0 V, 2.0 V ≤ VCC ≤ 5.5 V, 2.0 V ≤ AVCC0 ≤ 5.5 V, VSS = AVSS0 = 0 V, Ta = –40 to +105°C

Item		Symbol	VCC			Unit
			1.8 V ≤ VCC < 2.4 V	2.4 V ≤ VCC < 2.7 V	2.7 V ≤ VCC ≤ 5.5 V	
Maximum operating frequency*4	System clock (ICLK)	f_{max}	8	12	12	MHz
	FlashIF clock (FCLK)*1, *2		8	12	12	
	Peripheral module clock (PCLKB)		8	12	12	
	Peripheral module clock (PCLKD)*3		8	12	12	

Note 1. The lower-limit frequency of FCLK is 1 MHz during programming or erasing of the flash memory. When using FCLK at below 4 MHz, the frequency can be set to 1 MHz, 2 MHz, or 3 MHz. A non-integer frequency such as 1.5 MHz cannot be set.
Note 2. The frequency accuracy of FCLK should be ±3.5%.
Note 3. The lower-limit frequency of PCLKD is 4 MHz at 2.4 V or above and 1 MHz at below 2.4 V when the A/D converter is in use.
Note 4. The maximum operating frequency does not include HOCO error or PLL jitter. See Table 5.25, Clock Timing

Table 5.24 Operating Frequency Value (Low-Speed Operating Mode)

Conditions: 1.8 V ≤ VCC = AVCC0 < 2.0 V, 2.0 V ≤ VCC ≤ 5.5 V, 2.0 V ≤ AVCC0 ≤ 5.5 V, VSS = AVSS0 = 0 V, Ta = –40 to +105°C

Item		Symbol	VCC			Unit
			1.8 V ≤ VCC < 2.4 V	2.4 V ≤ VCC < 2.7 V	2.7 V ≤ VCC ≤ 5.5 V	
Maximum operating frequency	System clock (ICLK)	f_{max}	32.768			kHz
	FlashIF clock (FCLK)*1		32.768			
	Peripheral module clock (PCLKB)		32.768			
	Peripheral module clock (PCLKD)*2		32.768			

Note 1. Programming and erasing the flash memory is impossible.
Note 2. The A/D converter cannot be used.

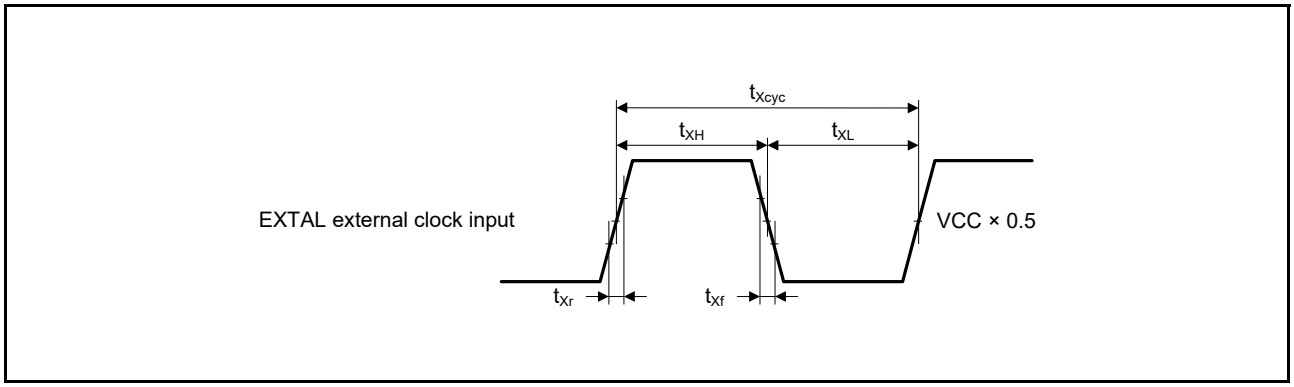

Figure 5.26 EXTAL External Clock Input Timing

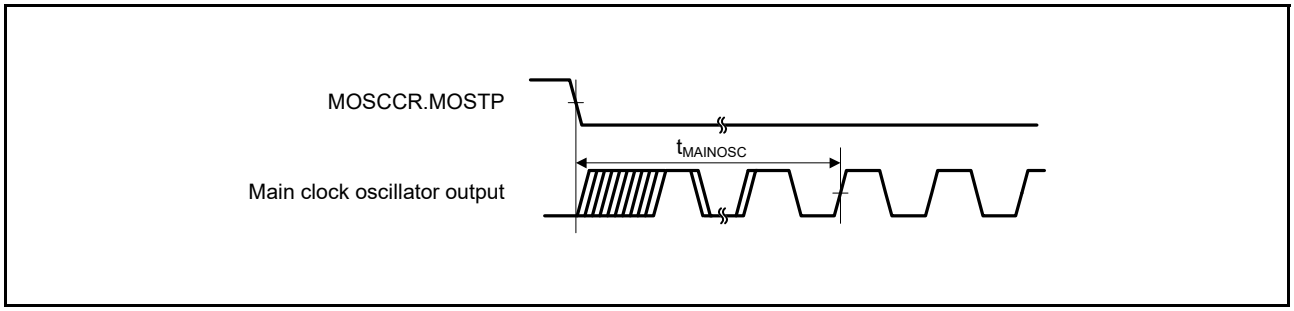

Figure 5.27 Main Clock Oscillation Start Timing

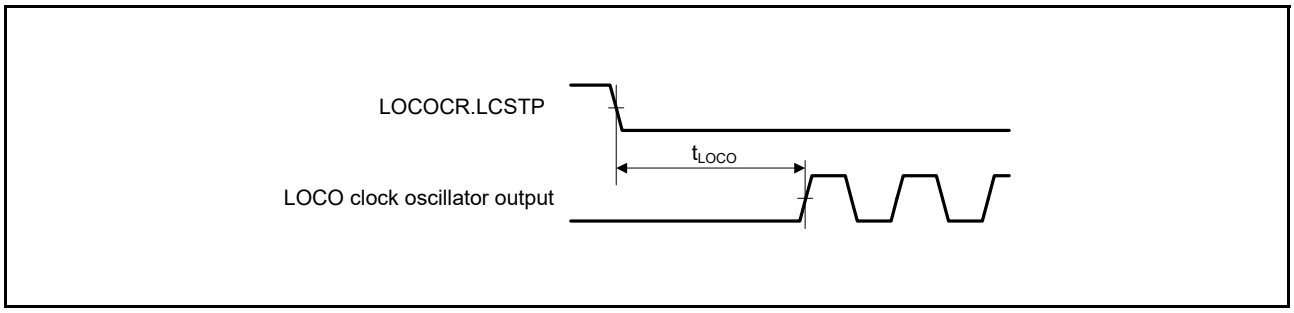

Figure 5.28 LOCO Clock Oscillation Start Timing

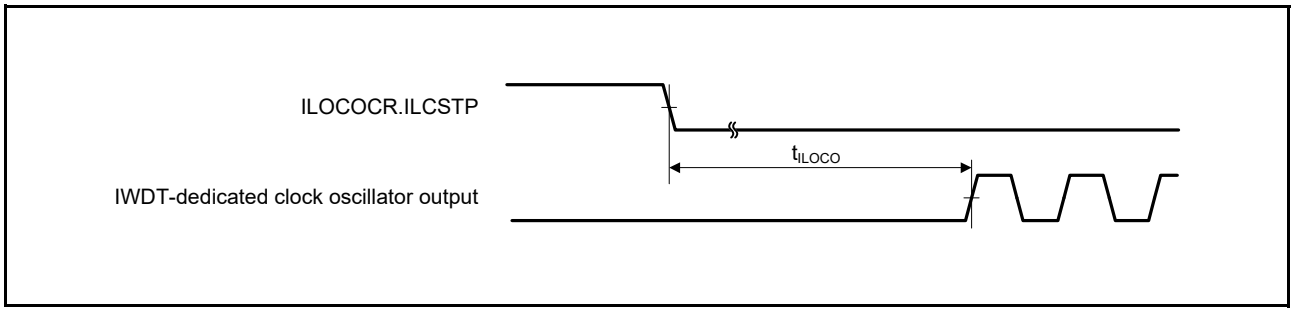

Figure 5.29 IWDT-Dedicated Clock Oscillation Start Timing

5.3.4 Control Signal Timing

Table 5.32 Control Signal Timing

Conditions: 1.8 V ≤ VCC = AVCC0 < 2.0 V, 2.0 V ≤ VCC ≤ 5.5 V, 2.0 V ≤ AVCC0 ≤ 5.5 V, VSS = AVSS0 = 0 V, Ta = –40 to +105°C

Item	Symbol	Min.	Typ.	Max.	Unit	Test Conditions	
NMI pulse width	t_{NMIW}	200	—	—	ns	NMI digital filter disabled (NMIFLTE.NFLTEN = 0)	t_{Pcyc} × 2 ≤ 200 ns
		t_{Pcyc} × 2*1	—	—			t_{Pcyc} × 2 > 200 ns
		200	—	—		NMI digital filter enabled (NMIFLTE.NFLTEN = 1)	t_{NMICK} × 3 ≤ 200 ns
		t_{NMICK} × 3.5*2	—	—			t_{NMICK} × 3 > 200 ns
IRQ pulse width	t_{IRQW}	200	—	—	ns	IRQ digital filter disabled (IRQFLTE0.FLTENi = 0)	t_{Pcyc} × 2 ≤ 200 ns
		t_{Pcyc} × 2*1	—	—			t_{Pcyc} × 2 > 200 ns
		200	—	—		IRQ digital filter enabled (IRQFLTE0.FLTENi = 1)	t_{IRQCK} × 3 ≤ 200 ns
		t_{IRQCK} × 3.5*3	—	—			t_{IRQCK} × 3 > 200 ns

Note: 200 ns minimum in software standby mode.
Note 1. t_{Pcyc} indicates the cycle of PCLKB.
Note 2. t_{NMICK} indicates the cycle of the NMI digital filter sampling clock.
Note 3. t_{IRQCK} indicates the cycle of the IRQi digital filter sampling clock (i = 0 to 7).

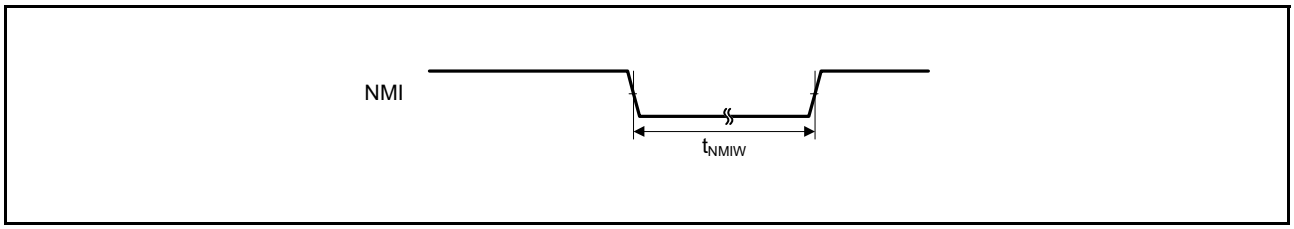

Figure 5.39 NMI Interrupt Input Timing

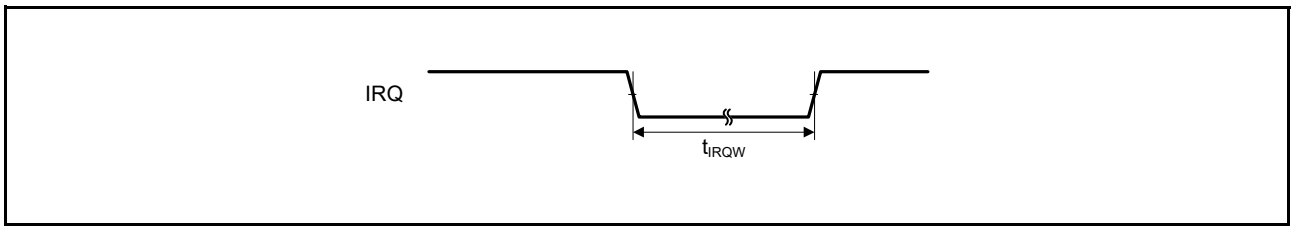

Figure 5.40 IRQ Interrupt Input Timing

Table 5.37 Timing of On-Chip Peripheral Modules (5)

Conditions: 2.7 V ≤ VCC ≤ 5.5 V, 2.7 V ≤ AVCC0 ≤ 5.5 V, VSS = AVSS0 = 0 V, T_a = –40 to +105°C

Item		Symbol	Min.*1	Max.	Unit	Test Conditions
Simple I²C (Standard mode)	SDA rise time	t_{Sr}	—	1000	ns	Figure 5.55
	SDA fall time	t_{Sf}	—	300	ns	
	SDA spike pulse removal time	t_{SP}	0	4 × t_{Pcyc}	ns	
	Data setup time	t_{SDAS}	250	—	ns	
	Data hold time	t_{SDAH}	0	—	ns	
	SCL, SDA capacitive load	C_b	—	400	pF	
Simple I²C (Fast mode)	SDA rise time	t_{Sr}	—	300	ns	Figure 5.55
	SDA fall time	t_{Sf}	—	300	ns	
	SDA spike pulse removal time	t_{SP}	0	4 × t_{Pcyc}	ns	
	Data setup time	t_{SDAS}	100	—	ns	
	Data hold time	t_{SDAH}	0	—	ns	
	SCL, SDA capacitive load	C_b	—	400	pF	

Note: t_{Pcyc}: PCLK cycle

Note 1. C_b is the total capacitance of the bus lines.

Table 5.38 Timing of On-Chip Peripheral Modules (6)

Conditions: 2.4 V ≤ VCC ≤ 5.5 V, 2.4 V ≤ AVCC0 ≤ 5.5 V, VSS = AVSS0 = 0 V, T_a = –40 to +105°C

Item		Min.	Max.	Unit	Test Conditions
REMC	Increase of the operating clock frequency at a transition to software standby mode	—	1.5	%	REMCON1.CSRC[3:0] = x101b (with the HOCO clock/512 selected) HOFCR.HOFXIN = 1 (when the HOCO oscillation is set to be continued)
	The period for the change in the operating clock frequency at a transition to software standby mode	—	400	μs	

Table 5.39 A/D Conversion Characteristics (1)

Conditions: 2.7 V ≤ VCC ≤ 5.5 V, 2.7 V ≤ AVCC0 ≤ 5.5 V, 2.7 V ≤ VREFH0 ≤ AVCC0, Reference voltage = VREFH0, VSS = AVSS0 = VREFL0 = 0 V, T_a = –40 to +105°C

Item		Min.	Typ.	Max.	Unit	Test Conditions
Frequency		1	—	32	MHz	
Resolution		—	—	12	Bit	
Conversion time*1 (Operation at PCLKD = 32 MHz)	Permissible signal source impedance (Max.) = 0.3 kΩ	1.41	—	—	μs	High-precision channel ADCSR.ADHSC bit = 0 ADSSTRn = 0Dh
		2.25	—	—	μs	Normal-precision channel ADCSR.ADHSC bit = 0 ADSSTRn = 28h
Analog input capacitance	Cs	—	—	15	pF	Pin capacitance included
Analog input resistance	Rs	—	—	2.5	kΩ	
Analog input effective range		0	—	VREFH0	V	
Offset error		—	±0.5	±4.5	LSB	High-precision channel
				±6.0	LSB	Other than above
Full-scale error		—	±0.75	±4.5	LSB	High-precision channel
				±6.0	LSB	Other than above
Quantization error		—	± 0.5	—	LSB	
Absolute accuracy		—	±1.25	±5.0	LSB	High-precision channel
				±8.0	LSB	Other than above
DNL differential nonlinearity error		—	±1.0	—	LSB	
INL integral nonlinearity error		—	±1.0	±3.0	LSB	

Note: The characteristics apply when no pin functions other than A/D converter input are used. Absolute accuracy includes quantization errors. Offset error, full-scale error, DNL differential nonlinearity error, and INL integral nonlinearity error do not include quantization errors.

Note 1. The conversion time is the sum of the sampling time and the comparison time. As the test conditions, the number of sampling states is indicated.

Table 5.42 A/D Conversion Characteristics (4)

Conditions: 2.4 V ≤ VCC ≤ 5.5 V, 2.4 V ≤ AVCC0 ≤ 5.5 V, 2.4 V ≤ VREFH0 ≤ AVCC0, Reference voltage = VREFH0, VSS = AVSS0 = 0 V, Ta = –40 to +105°C

Item		Min.	Typ.	Max.	Unit	Test Conditions
Frequency		1	—	16	MHz	
Resolution		—	—	12	Bit	
Conversion time*1 (Operation at PCLKD = 16 MHz)	Permissible signal source impedance (Max.) = 2.2 kΩ	3.38	—	—	μs	High-precision channel ADCSR.ADHSC bit = 1 ADSSTRn = 0Dh
		5.06	—	—		Normal-precision channel ADCSR.ADHSC bit = 1 ADSSTRn = 28h
Analog input capacitance	Cs	—	—	15	pF	Pin capacitance included
Analog input resistance	Rs	—	—	2.5	kΩ	
Analog input effective range		0	—	VREFH0	V	
Offset error		—	±0.5	±4.5	LSB	
Full-scale error		—	±0.75	±4.5	LSB	
Quantization error		—	±0.5	—	LSB	
Absolute accuracy		—	±1.25	±5.0	LSB	High-precision channel
				±8.0	LSB	Other than above
DNL differential nonlinearity error		—	±1.0	—	LSB	
INL integral nonlinearity error		—	±1.0	±3.0	LSB	

Note: The characteristics apply when no pin functions other than A/D converter input are used. Absolute accuracy includes quantization errors. Offset error, full-scale error, DNL differential nonlinearity error, and INL integral nonlinearity error do not include quantization errors.

Note 1. The conversion time is the sum of the sampling time and the comparison time. As the test conditions, the number of sampling states is indicated.

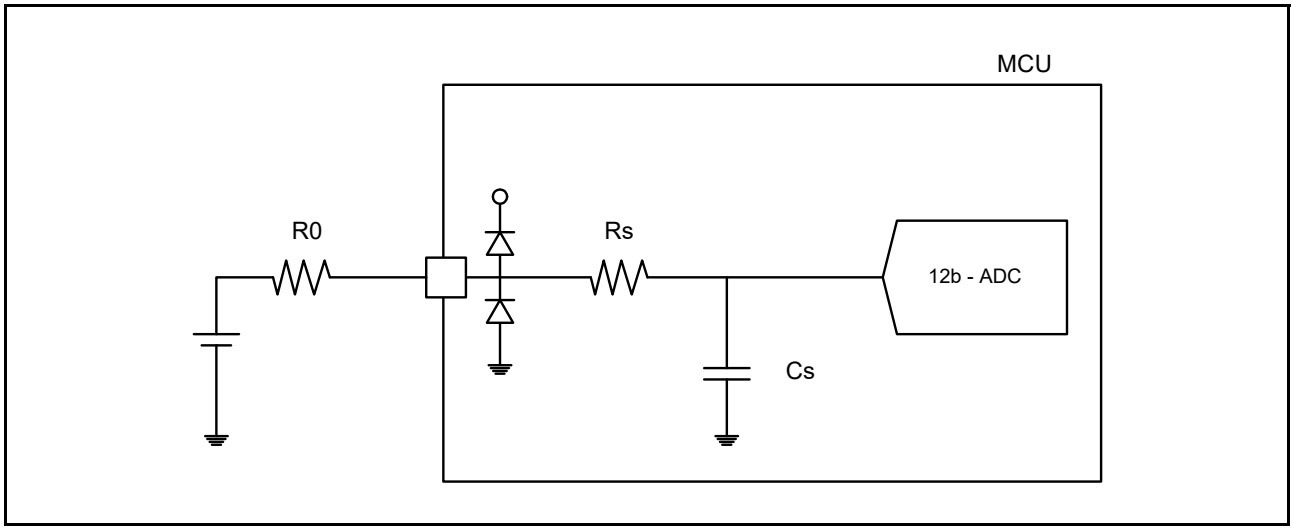

Figure 5.57 Equivalent Circuit

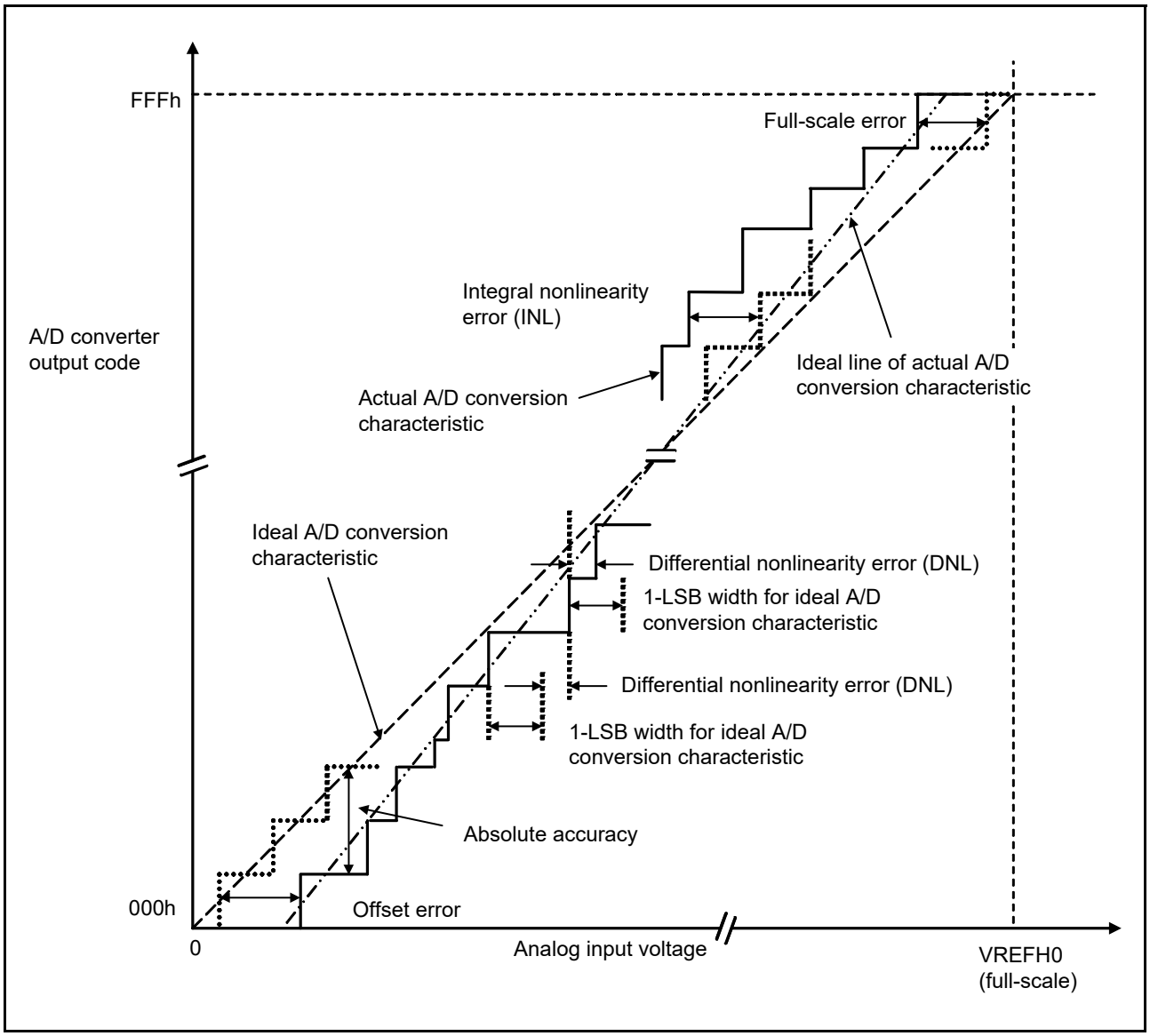

Figure 5.58 Illustration of A/D Converter Characteristic Terms

Absolute accuracy

Absolute accuracy is the difference between output code based on the theoretical A/D conversion characteristics, and the actual A/D conversion result. When measuring absolute accuracy, the voltage at the midpoint of the width of analog input voltage (1-LSB width), that can meet the expectation of outputting an equal code based on the theoretical A/D conversion characteristics, is used as an analog input voltage. For example, if 12-bit resolution is used and if reference voltage (VREFH0 = 3.072 V), then 1-LSB width becomes 0.75 mV, and 0 mV, 0.75 mV, 1.5 mV, ... are used as analog input voltages.

If analog input voltage is 6 mV, absolute accuracy = ±5 LSB means that the actual A/D conversion result is in the range of 003h to 00Dh though an output code, 008h, can be expected from the theoretical A/D conversion characteristics.

Integral nonlinearity error (INL)

Integral nonlinearity error is the maximum deviation between the ideal line when the measured offset and full-scale errors are zeroed, and the actual output code.

Differential nonlinearity error (DNL)

Differential nonlinearity error is the difference between 1-LSB width based on the ideal A/D conversion characteristics and the width of the actual output code.

Offset error

Offset error is the difference between a transition point of the ideal first output code and the actual first output code.

Full-scale error

Full-scale error is the difference between a transition point of the ideal last output code and the actual last output code.

5.13 Usage Notes

5.13.1 Connecting VCL Capacitor and Bypass Capacitors

This MCU integrates an internal voltage-down circuit, which is used for lowering the power supply voltage in the internal MCU to adjust automatically to the optimum level. A 4.7-µF capacitor needs to be connected between this internal voltage-down power supply (VCL pin) and VSS pin. Figure 5.67 to Figure 5.70 shows how to connect external capacitors. Place an external capacitor close to the pins. Do not apply the power supply voltage to the VCL pin. Insert a multilayer ceramic capacitor as a bypass capacitor between each pair of the power supply pins. Implement a bypass capacitor to the MCU power supply pins as close as possible. Use a recommended value of 0.1 µF as the capacitance of the capacitors. For the capacitors related to crystal oscillation, see section 9, Clock Generation Circuit in the User's Manual: Hardware. For the capacitors related to analog modules, also see section 33, 12-Bit A/D Converter (S12ADE) in the User's Manual: Hardware.

For notes on designing the printed circuit board, see the descriptions of the application note "Hardware Design Guide" (R01AN1411EJ). The latest version can be downloaded from Renesas Electronics Website.

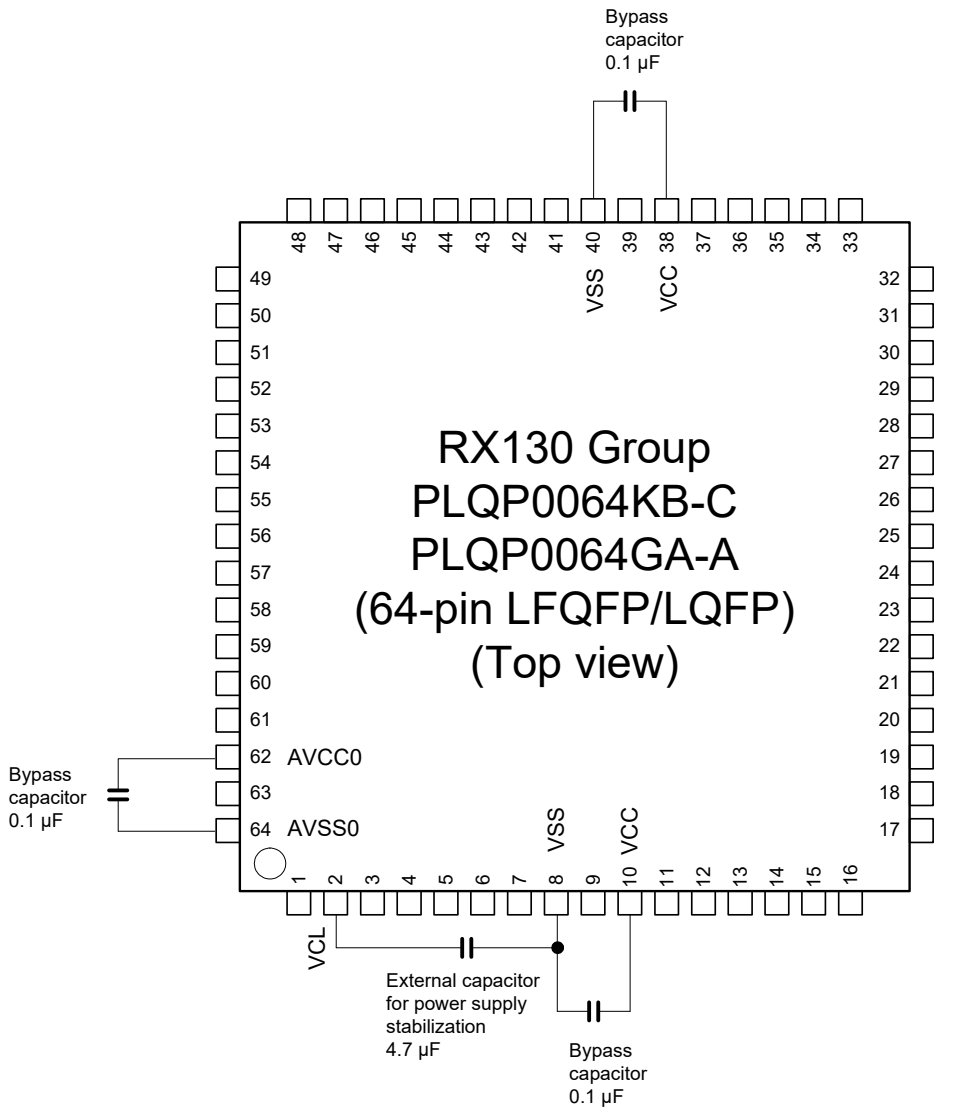

Note. Do not apply the power supply voltage to the VCL pin.
Use a 4.7-μF multilayer ceramic for the VCL pin and place it close to the pin.
A recommended value is shown for the capacitance of the bypass capacitors.

Figure 5.69 Connecting Capacitors (64 Pins)

Appendix 1. Package Dimensions

Information on the latest version of the package dimensions or mountings has been displayed in “Packages” on Renesas Electronics Corporation website.

JEITA Package Code	RENESAS Code	Previous Code	MASS (Typ) [g]
P-LFQFP100-14x14-0.50	PLQP0100KB-B	—	0.6

Unit: mm

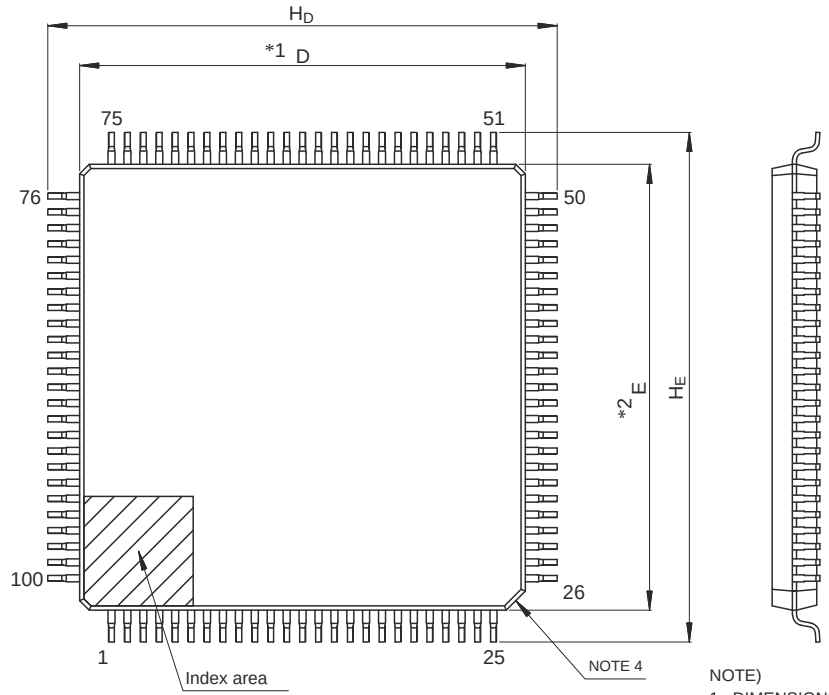

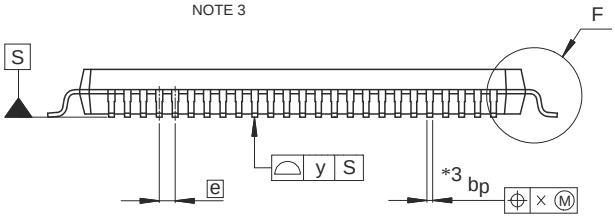

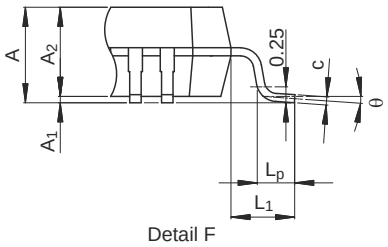

NOTE)
1. DIMENSIONS “*1” AND “*2” DO NOT INCLUDE MOLD FLASH.
2. DIMENSION “*3” DOES NOT INCLUDE TRIM OFFSET.
3. PIN 1 VISUAL INDEX FEATURE MAY VARY, BUT MUST BE LOCATED WITHIN THE HATCHED AREA.
4. CHAMFERS AT CORNERS ARE OPTIONAL, SIZE MAY VARY.

Reference Symbol	Dimensions in millimeters		
	Min	Nom	Max
D	13.9	14.0	14.1
E	13.9	14.0	14.1
A_2	—	1.4	—
H_D	15.8	16.0	16.2
H_E	15.8	16.0	16.2
A	—	—	1.7
A_1	0.05	—	0.15
b_p	0.15	0.20	0.27
c	0.09	—	0.20
θ	0°	3.5°	8°
e	—	0.5	—
x	—	—	0.08
y	—	—	0.08
L_p	0.45	0.6	0.75
L_1	—	1.0	—

Figure A 100-Pin LFQFP (PLQP0100KB-B)

JEITA Package Code	RENESAS Code	Previous Code	MASS[Typ.]
P-LFQFP80-12x12-0.50	PLQP0080KB-B	——	0.5g

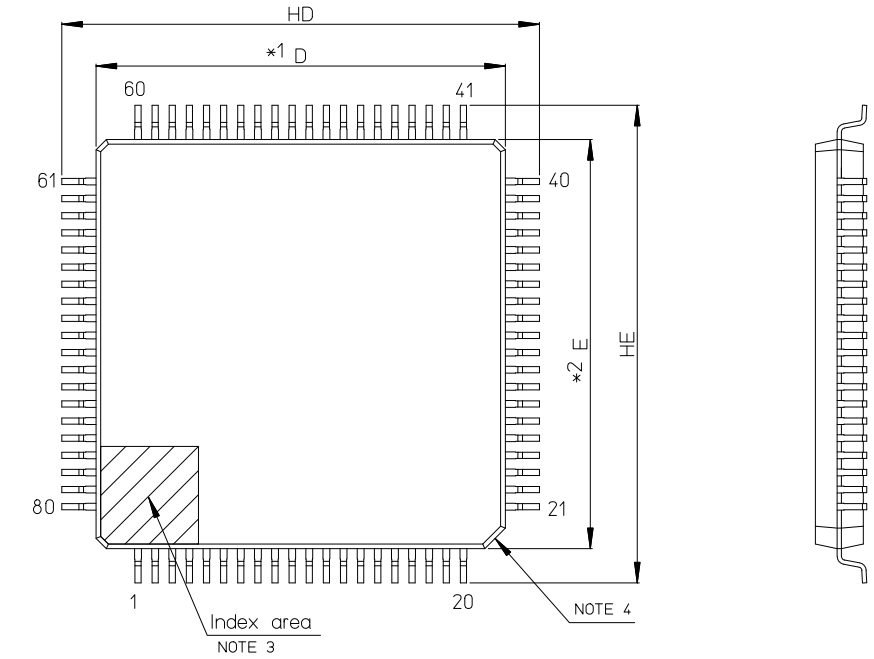

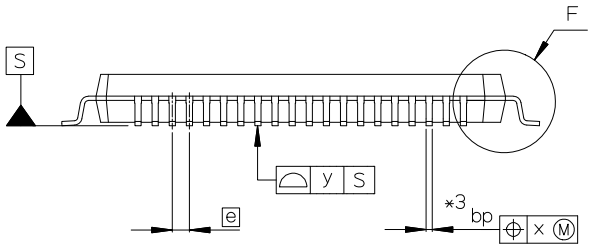

NOTE)
1. DIMENSIONS "*1" AND "*2" DO NOT INCLUDE MOLD FLASH.
2. DIMENSION "*3" DOES NOT INCLUDE TRIM OFFSET.
3. PIN 1 VISUAL INDEX FEATURE MAY VARY, BUT MUST BE LOCATED WITHIN THE HATCHED AREA.
4. CHAMFERS AT CORNERS ARE OPTIONAL; SIZE MAY VARY.

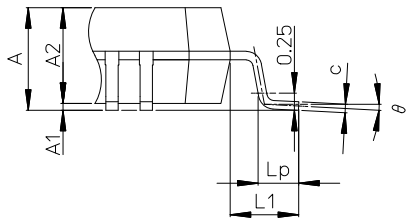

Detail F

Reference Symbol	Dimension in Millimeters		
	Min	Nom	Max
D	11.9	12.0	12.1
E	11.9	12.0	12.1
A2	——	1.4	——
HD	13.8	14.0	14.2
HE	13.8	14.0	14.2
A	——	——	1.7
A1	0.05	——	0.15
bp	0.15	0.20	0.27
c	0.09	——	0.20
θ	0°	3.5°	8°
e	——	0.5	——
x	——	——	0.08
y	——	——	0.08
Lp	0.45	0.6	0.75
L1	——	1.0	——

Figure B 80-Pin LFQFP (PLQP0080KB-B)