Intel - EP20K60EQC208-1 Datasheet

Welcome to E-XFL.COM

Understanding Embedded - FPGAs (Field Programmable Gate Array)

Embedded - FPGAs, or Field Programmable Gate Arrays, are advanced integrated circuits that offer unparalleled flexibility and performance for digital systems. Unlike traditional fixed-function logic devices, FPGAs can be programmed and reprogrammed to execute a wide array of logical operations, enabling customized functionality tailored to specific applications. This reprogrammability allows developers to iterate designs quickly and implement complex functions without the need for custom hardware.

Applications of Embedded - FPGAs

The versatility of Embedded - FPGAs makes them indispensable in numerous fields. In telecommunications.

Details	
Product Status	Obsolete
Number of LABs/CLBs	2560
Number of Logic Elements/Cells	2560
Total RAM Bits	32768
Number of I/O	148
Number of Gates	162000
Voltage - Supply	1.71V ~ 1.89V
Mounting Type	Surface Mount
Operating Temperature	0°C ~ 85°C (TJ)
Package / Case	208-BFQFP
Supplier Device Package	208-PQFP (28x28)
Purchase URL	https://www.e-xfl.com/product-detail/intel/ep20k60eqc208-1

Table 5. APEX 20K FineLine BGA Package Options & I/O Count *Notes (1), (2)*

Device	144 Pin	324 Pin	484 Pin	672 Pin	1,020 Pin
EP20K30E	93	128			
EP20K60E	93	196			
EP20K100		252			
EP20K100E	93	246			
EP20K160E			316		
EP20K200			382		
EP20K200E			376	376	
EP20K300E				408	
EP20K400				502 *(3)*	
EP20K400E				488 *(3)*	
EP20K600E				508 *(3)*	588
EP20K1000E				508 *(3)*	708
EP20K1500E					808

Notes to Tables 4 and 5:

(1) I/O counts include dedicated input and clock pins.

(2) APEX 20K device package types include thin quad flat pack (TQFP), plastic quad flat pack (PQFP), power quad flat pack (RQFP), 1.27-mm pitch ball-grid array (BGA), 1.00-mm pitch FineLine BGA, and pin-grid array (PGA) packages.

(3) This device uses a thermally enhanced package, which is taller than the regular package. Consult the *Altera Device Package Information Data Sheet* for detailed package size information.

Table 6. APEX 20K QFP, BGA & PGA Package Sizes

Feature	144-Pin TQFP	208-Pin QFP	240-Pin QFP	356-Pin BGA	652-Pin BGA	655-Pin PGA
Pitch (mm)	0.50	0.50	0.50	1.27	1.27	–
Area (mm^2)	484	924	1,218	1,225	2,025	3,906
Length × Width (mm × mm)	22 × 22	30.4 × 30.4	34.9 × 34.9	35 × 35	45 × 45	62.5 × 62.5

Table 7. APEX 20K FineLine BGA Package Sizes

Feature	144 Pin	324 Pin	484 Pin	672 Pin	1,020 Pin
Pitch (mm)	1.00	1.00	1.00	1.00	1.00
Area (mm^2)	169	361	529	729	1,089
Length × Width (mm × mm)	13 × 13	19 × 19	23 × 23	27 × 27	33 × 33

Cascade Chain

With the cascade chain, the APEX 20K architecture can implement functions with a very wide fan-in. Adjacent LUTs can compute portions of a function in parallel; the cascade chain serially connects the intermediate values. The cascade chain can use a logical AND or logical OR (via De Morgan's inversion) to connect the outputs of adjacent LEs. Each additional LE provides four more inputs to the effective width of a function, with a short cascade delay. Cascade chain logic can be created automatically by the Quartus II software Compiler during design processing, or manually by the designer during design entry.

Cascade chains longer than ten LEs are implemented automatically by linking LABs together. For enhanced fitting, a long cascade chain skips alternate LABs in a MegaLAB structure. A cascade chain longer than one LAB skips either from an even-numbered LAB to the next even-numbered LAB, or from an odd-numbered LAB to the next odd-numbered LAB. For example, the last LE of the first LAB in the upper-left MegaLAB structure carries to the first LE of the third LAB in the MegaLAB structure. Figure 7 shows how the cascade function can connect adjacent LEs to form functions with a wide fan-in.

Figure 7. APEX 20K Cascade Chain

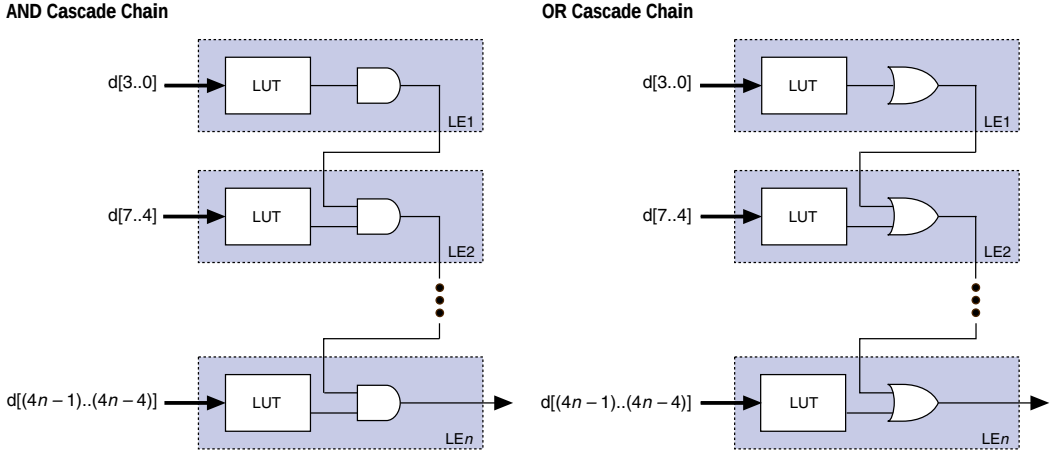

Figure 8. APEX 20K LE Operating Modes

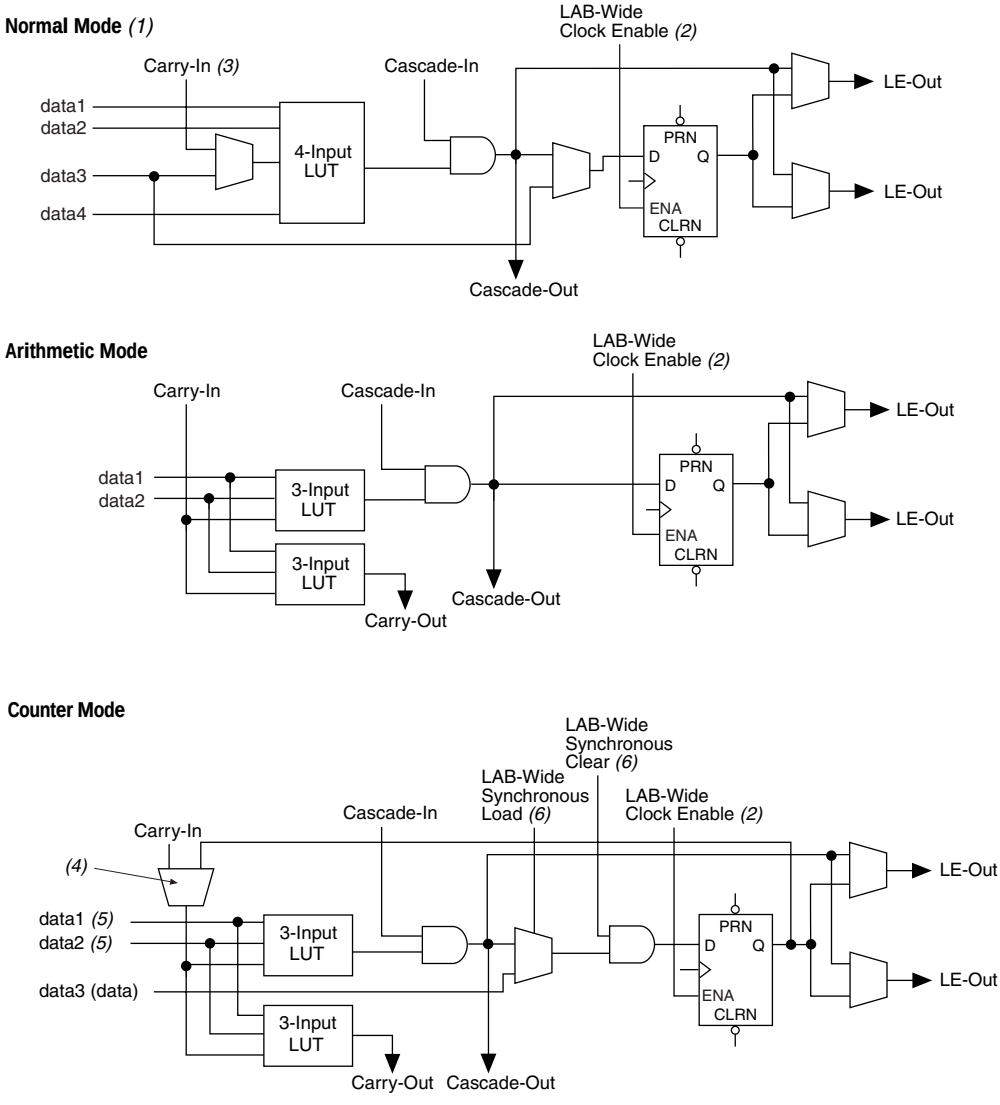

Notes to Figure 8:

(1) LEs in normal mode support register packing.
(2) There are two LAB-wide clock enables per LAB.
(3) When using the carry-in in normal mode, the packed register feature is unavailable.
(4) A register feedback multiplexer is available on LE1 of each LAB.
(5) The `DATA1` and `DATA2` input signals can supply counter enable, up or down control, or register feedback signals for LEs other than the second LE in an LAB.
(6) The LAB-wide synchronous clear and LAB wide synchronous load affect all registers in an LAB.

Figure 10. FastTrack Connection to Local Interconnect

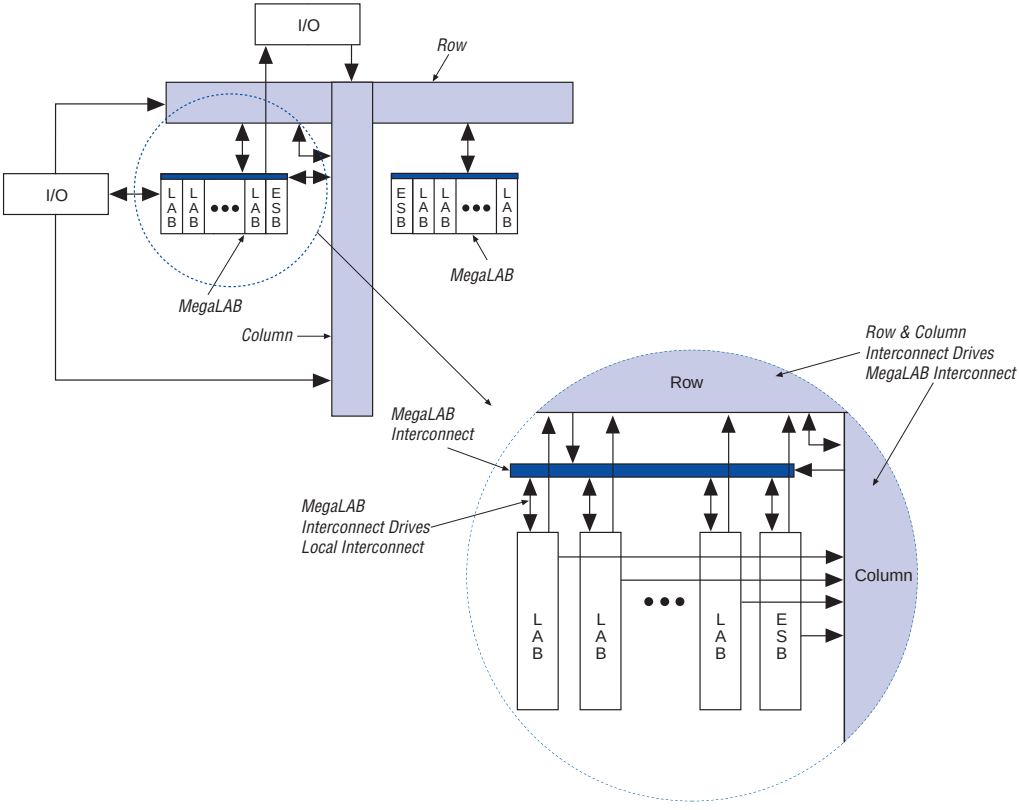

Figure 18. Deep Memory Block Implemented with Multiple ESBs

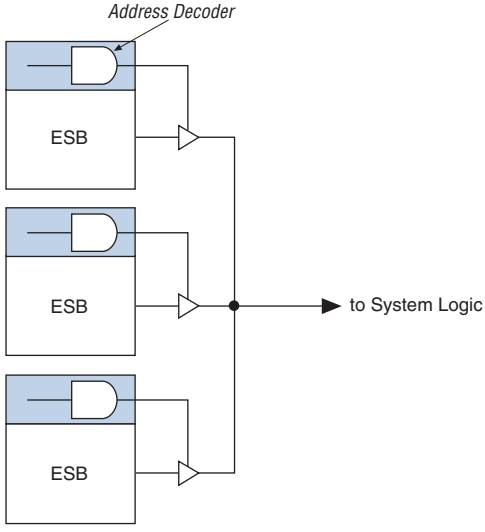

The ESB implements two forms of dual-port memory: read / write clock mode and input / output clock mode. The ESB can also be used for bidirectional, dual-port memory applications in which two ports read or write simultaneously. To implement this type of dual-port memory, two or four ESBs are used to support two simultaneous reads or writes. This functionality is shown in Figure 19.

Figure 19. APEX 20K ESB Implementing Dual-Port RAM

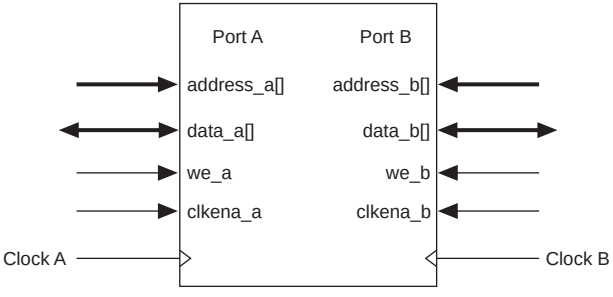

Read/Write Clock Mode

The read / write clock mode contains two clocks. One clock controls all registers associated with writing: data input, WE, and write address. The other clock controls all registers associated with reading: read enable (RE), read address, and data output. The ESB also supports clock enable and asynchronous clear signals; these signals also control the read and write registers independently. Read / write clock mode is commonly used for applications where reads and writes occur at different system frequencies. Figure 20 shows the ESB in read / write clock mode.

Figure 20. ESB in Read/Write Clock Mode *Note (1)*

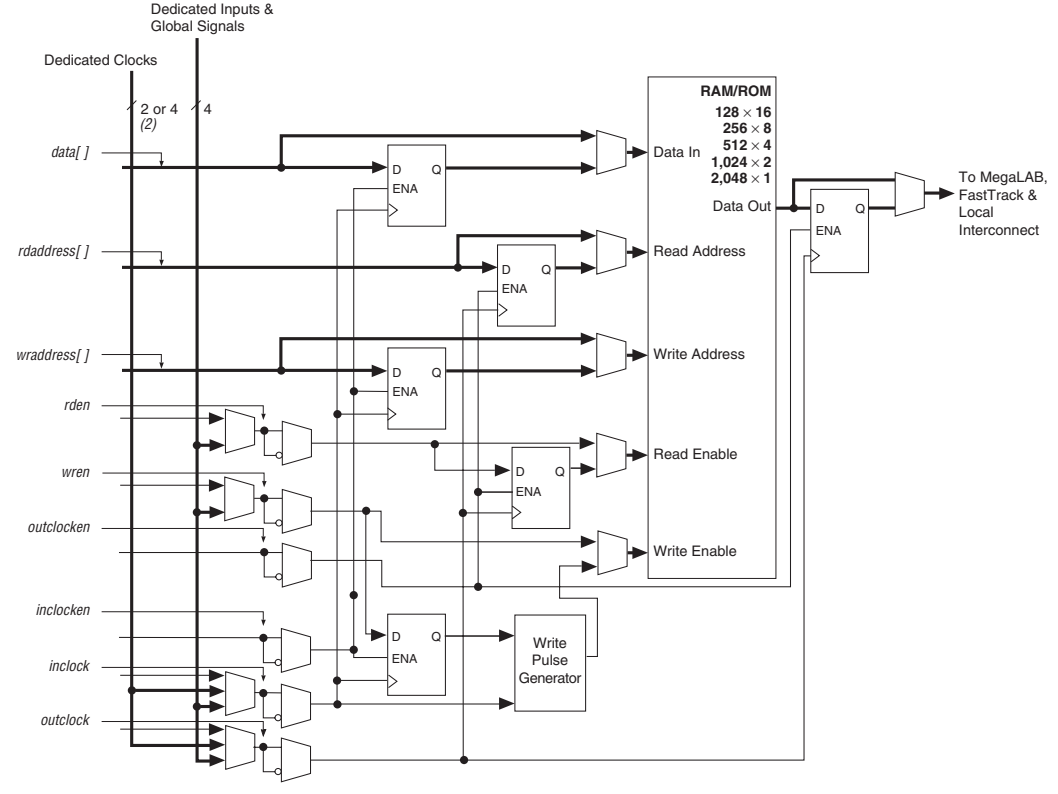

Notes to Figure 20:

(1) All registers can be cleared asynchronously by ESB local interconnect signals, global signals, or the chip-wide reset.

(2) APEX 20KE devices have four dedicated clocks.

Input/Output Clock Mode

The input/output clock mode contains two clocks. One clock controls all registers for inputs into the ESB: data input, WE, RE, read address, and write address. The other clock controls the ESB data output registers. The ESB also supports clock enable and asynchronous clear signals; these signals also control the reading and writing of registers independently. Input/output clock mode is commonly used for applications where the reads and writes occur at the same system frequency, but require different clock enable signals for the input and output registers. Figure 21 shows the ESB in input/output clock mode.

Figure 21. ESB in Input/Output Clock Mode *Note (1)*

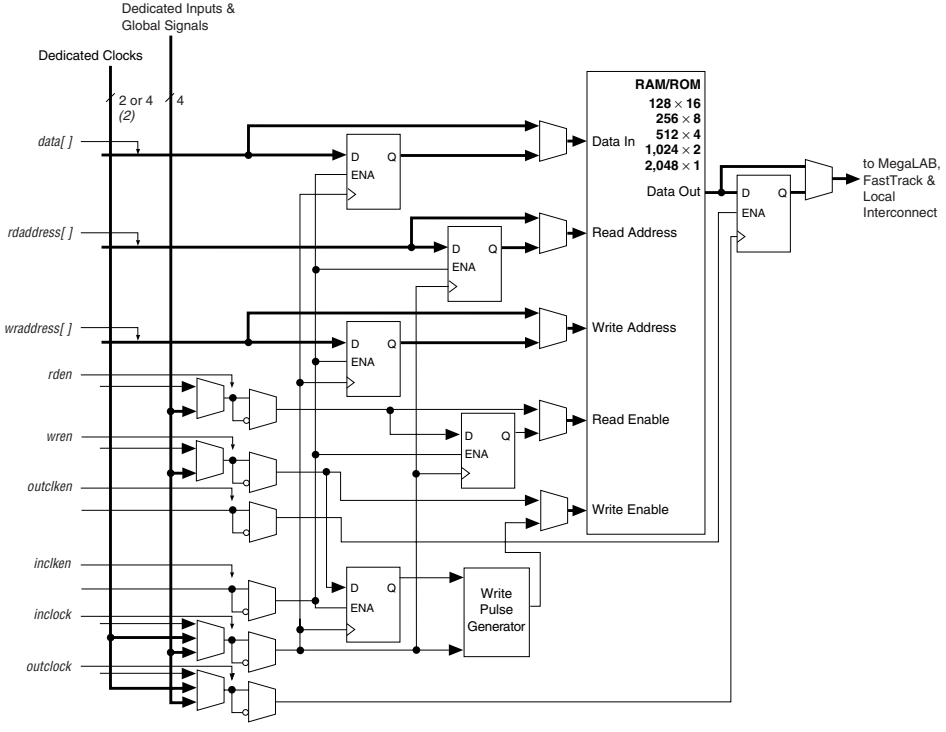

Notes to Figure 21:

(1) All registers can be cleared asynchronously by ESB local interconnect signals, global signals, or the chip-wide reset.

(2) APEX 20KE devices have four dedicated clocks.

Single-Port Mode

The APEX 20K ESB also supports a single-port mode, which is used when simultaneous reads and writes are not required. See Figure 22.

Each IOE drives a row, column, MegaLAB, or local interconnect when used as an input or bidirectional pin. A row IOE can drive a local, MegaLAB, row, and column interconnect; a column IOE can drive the column interconnect. Figure 27 shows how a row IOE connects to the interconnect.

Figure 27. Row IOE Connection to the Interconnect

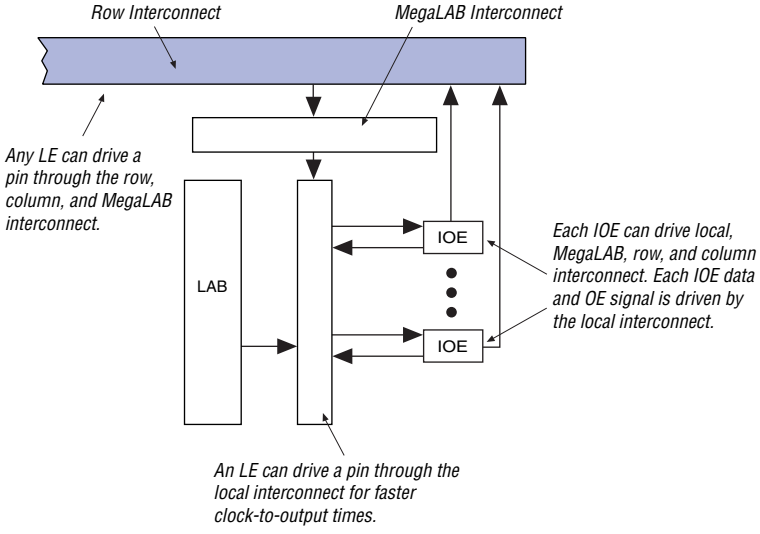

Under hot socketing conditions, APEX 20KE devices will not sustain any damage, but the I/O pins will drive out.

MultiVolt I/O Interface

The APEX device architecture supports the MultiVolt I/O interface feature, which allows APEX devices in all packages to interface with systems of different supply voltages. The devices have one set of VCC pins for internal operation and input buffers (VCCINT), and another set for I/O output drivers (VCCIO).

The APEX 20K VCCINT pins must always be connected to a 2.5 V power supply. With a 2.5-V V_{CCINT} level, input pins are 2.5-V, 3.3-V, and 5.0-V tolerant. The VCCIO pins can be connected to either a 2.5-V or 3.3-V power supply, depending on the output requirements. When VCCIO pins are connected to a 2.5-V power supply, the output levels are compatible with 2.5-V systems. When the VCCIO pins are connected to a 3.3-V power supply, the output high is 3.3 V and is compatible with 3.3-V or 5.0-V systems.

Table 12 summarizes 5.0-V tolerant APEX 20K MultiVolt I/O support.

Table 12. 5.0-V Tolerant APEX 20K MultiVolt I/O Support

V_{CCIO} (V)	Input Signals (V)			Output Signals (V)		
	2.5	3.3	5.0	2.5	3.3	5.0
2.5	v	v (1)	v (1)	v		
3.3	v	v	v (1)	v (2)	v	v

Notes to Table 12:

(1) The PCI clamping diode must be disabled to drive an input with voltages higher than V_{CCIO}.

(2) When V_{CCIO} = 3.3 V, an APEX 20K device can drive a 2.5-V device with 3.3-V tolerant inputs.

Open-drain output pins on 5.0-V tolerant APEX 20K devices (with a pull-up resistor to the 5.0-V supply) can drive 5.0-V CMOS input pins that require a V_{IH} of 3.5 V. When the pin is inactive, the trace will be pulled up to 5.0 V by the resistor. The open-drain pin will only drive low or tri-state; it will never drive high. The rise time is dependent on the value of the pull-up resistor and load impedance. The I_{OL} current specification should be considered when selecting a pull-up resistor.

Figure 35 shows the output drive characteristics of APEX 20KE devices.

Figure 35. Output Drive Characteristics of APEX 20KE Devices *Note (1)*

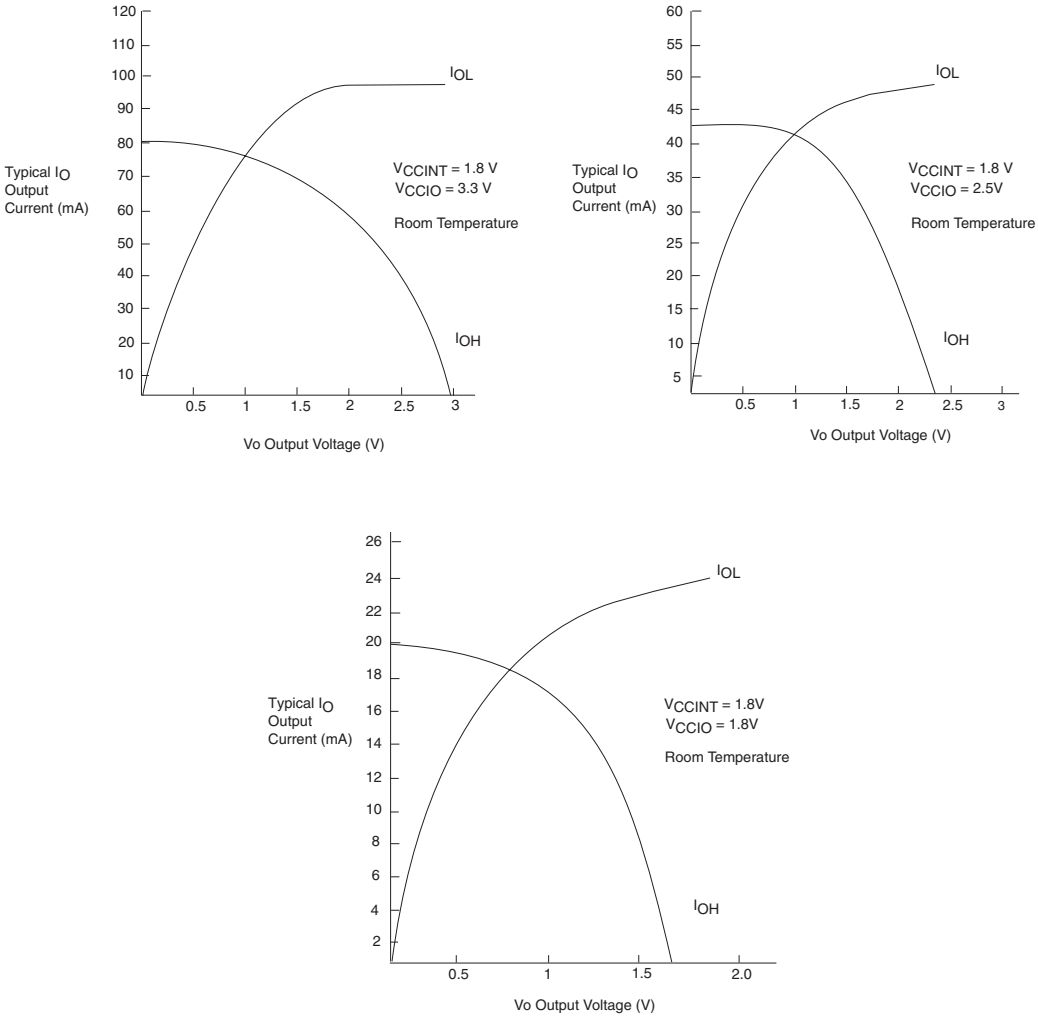

Note to Figure 35:
(1) These are transient (AC) currents.

Timing Model

The high-performance FastTrack and MegaLAB interconnect routing resources ensure predictable performance, accurate simulation, and accurate timing analysis. This predictable performance contrasts with that of FPGAs, which use a segmented connection scheme and therefore have unpredictable performance.

Figures 38 and 39 show the asynchronous and synchronous timing waveforms, respectively, for the ESB macroparameters in Table 31.

Figure 38. ESB Asynchronous Timing Waveforms

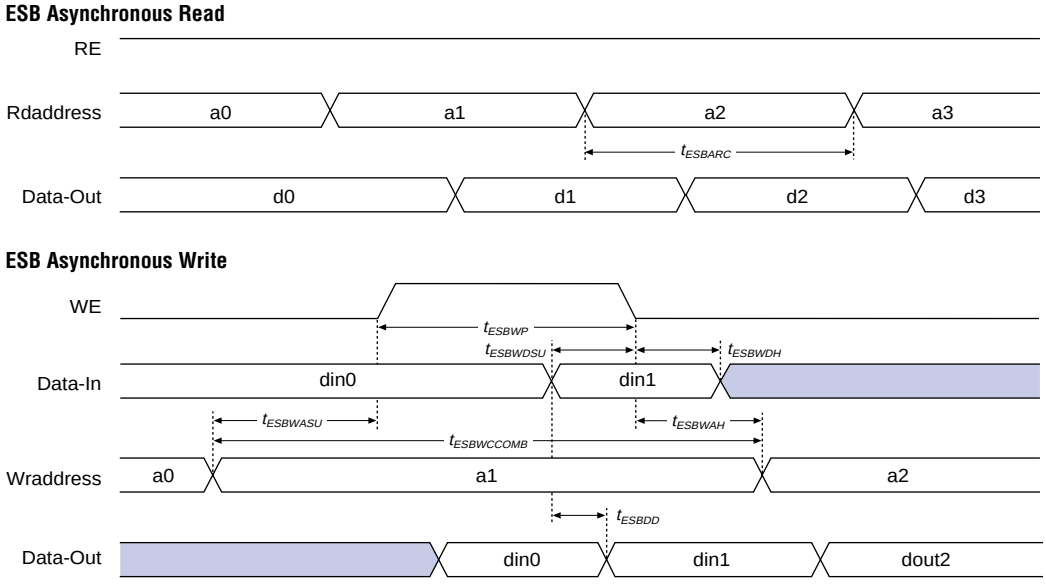

Table 31. APEX 20K f_{MAX} Timing Parameters (Part 2 of 2)

Symbol	Parameter
$t_{ESBDATACO2}$	ESB clock-to-output delay without output registers
t_{ESBDD}	ESB data-in to data-out delay for RAM mode
t_{PD}	ESB macrocell input to non-registered output
$t_{PTERMSU}$	ESB macrocell register setup time before clock
$t_{PTERMCO}$	ESB macrocell register clock-to-output delay
t_{F1-4}	Fanout delay using local interconnect
t_{F5-20}	Fanout delay using MegaLab Interconnect
t_{F20+}	Fanout delay using FastTrack Interconnect
t_{CH}	Minimum clock high time from clock pin
t_{CL}	Minimum clock low time from clock pin
t_{CLRP}	LE clear pulse width
t_{PREP}	LE preset pulse width
t_{ESBCH}	Clock high time
t_{ESBCL}	Clock low time
t_{ESBWP}	Write pulse width
t_{ESBRP}	Read pulse width

Tables 32 and 33 describe APEX 20K external timing parameters.

Table 32. APEX 20K External Timing Parameters Note (1)

Symbol	Clock Parameter
t_{INSU}	Setup time with global clock at IOE register
t_{INH}	Hold time with global clock at IOE register
t_{OUTCO}	Clock-to-output delay with global clock at IOE register

Table 33. APEX 20K External Bidirectional Timing Parameters Note (1)

Symbol	Parameter	Conditions
$t_{INSUBIDIR}$	Setup time for bidirectional pins with global clock at same-row or same-column LE register	
$t_{INHBIDIR}$	Hold time for bidirectional pins with global clock at same-row or same-column LE register	
$t_{OUTCOBIDIR}$	Clock-to-output delay for bidirectional pins with global clock at IOE register	C1 = 10 pF
$t_{XZBIDIR}$	Synchronous IOE output buffer disable delay	C1 = 10 pF
$t_{ZXBIDIR}$	Synchronous IOE output buffer enable delay, slow slew rate = off	C1 = 10 pF

Note to Tables 32 and 33:
(1) These timing parameters are sample-tested only.

Tables 34 through 37 show APEX 20KE LE, ESB, routing, and functional timing microparameters for the f_{MAX} timing model.

Table 34. APEX 20KE LE Timing Microparameters

Symbol	Parameter
t_{SU}	LE register setup time before clock
t_{H}	LE register hold time after clock
t_{CO}	LE register clock-to-output delay
t_{LUT}	LUT delay for data-in to data-out

Table 35. APEX 20KE ESB Timing Microparameters

Symbol	Parameter
t_{ESBARC}	ESB Asynchronous read cycle time
t_{ESBSRC}	ESB Synchronous read cycle time
t_{ESBAWC}	ESB Asynchronous write cycle time
t_{ESBSWC}	ESB Synchronous write cycle time
$t_{ESBWASU}$	ESB write address setup time with respect to WE
t_{ESBWAH}	ESB write address hold time with respect to WE
$t_{ESBWDSU}$	ESB data setup time with respect to WE
t_{ESBWDH}	ESB data hold time with respect to WE
$t_{ESBRASU}$	ESB read address setup time with respect to RE
t_{ESBRAH}	ESB read address hold time with respect to RE
$t_{ESBWESU}$	ESB WE setup time before clock when using input register
t_{ESBWEH}	ESB WE hold time after clock when using input register
$t_{ESBDATASU}$	ESB data setup time before clock when using input register
$t_{ESBDATAH}$	ESB data hold time after clock when using input register
$t_{ESBWADDRSU}$	ESB write address setup time before clock when using input registers
$t_{ESBRADDRSU}$	ESB read address setup time before clock when using input registers
$t_{ESBDATACO1}$	ESB clock-to-output delay when using output registers
$t_{ESBDATACO2}$	ESB clock-to-output delay without output registers
t_{ESBDD}	ESB data-in to data-out delay for RAM mode
t_{PD}	ESB Macrocell input to non-registered output
$t_{PTERMSU}$	ESB Macrocell register setup time before clock
$t_{PTERMCO}$	ESB Macrocell register clock-to-output delay

Table 42. EP20K400 f_{MAX} Timing Parameters

Symbol	-1 Speed Grade		-2 Speed Grade		-3 Speed Grade		Units
	Min	Max	Min	Max	Min	Max	
t_{SU}	0.1		0.3		0.6		ns
t_{H}	0.5		0.8		0.9		ns
t_{CO}		0.1		0.4		0.6	ns
t_{LUT}		1.0		1.2		1.4	ns
t_{ESBRC}		1.7		2.1		2.4	ns
t_{ESBWC}		5.7		6.9		8.1	ns
$t_{ESBWESU}$	3.3		3.9		4.6		ns
$t_{ESBDATASU}$	2.2		2.7		3.1		ns
$t_{ESBDATAH}$	0.6		0.8		0.9		ns
$t_{ESBADDRSU}$	2.4		2.9		3.3		ns
$t_{ESBDATACO1}$		1.3		1.6		1.8	ns
$t_{ESBDATACO2}$		2.5		3.1		3.6	ns
t_{ESBDD}		2.5		3.3		3.6	ns
t_{PD}		2.5		3.1		3.6	ns
$t_{PTERMSU}$	1.7		2.1		2.4		ns
$t_{PTERMCO}$		1.0		1.2		1.4	ns
t_{F1-4}		0.4		0.5		0.6	ns
t_{F5-20}		2.6		2.8		2.9	ns
t_{F20+}		3.7		3.8		3.9	ns
t_{CH}	2.0		2.5		3.0		ns
t_{CL}	2.0		2.5		3.0		ns
t_{CLRP}	0.5		0.6		0.8		ns
t_{PREP}	0.5		0.5		0.5		ns
t_{ESBCH}	2.0		2.5		3.0		ns
t_{ESBCL}	2.0		2.5		3.0		ns
t_{ESBWP}	1.5		1.9		2.2		ns
t_{ESBRP}	1.0		1.2		1.4		ns

Tables 43 through 48 show the I/O external and external bidirectional timing parameter values for EP20K100, EP20K200, and EP20K400 APEX 20K devices.

Table 56. EP20K60E f_{MAX} ESB Timing Microparameters

Symbol	-1		-2		-3		Unit
	Min	Max	Min	Max	Min	Max	
t_{ESBARC}		1.83		2.57		3.79	ns
t_{ESBSRC}		2.46		3.26		4.61	ns
t_{ESBAWC}		3.50		4.90		7.23	ns
t_{ESBSWC}		3.77		4.90		6.79	ns
$t_{ESBWASU}$	1.59		2.23		3.29		ns
t_{ESBWAH}	0.00		0.00		0.00		ns
$t_{ESBWDSU}$	1.75		2.46		3.62		ns
t_{ESBWDH}	0.00		0.00		0.00		ns
$t_{ESBRASU}$	1.76		2.47		3.64		ns
t_{ESBRAH}	0.00		0.00		0.00		ns
$t_{ESBWESU}$	1.68		2.49		3.87		ns
t_{ESBWEH}	0.00		0.00		0.00		ns
$t_{ESBDATASU}$	0.08		0.43		1.04		ns
$t_{ESBDATAH}$	0.13		0.13		0.13		ns
$t_{ESBWADDRSU}$	0.29		0.72		1.46		ns
$t_{ESBRADDRSU}$	0.36		0.81		1.58		ns
$t_{ESBDATACO1}$		1.06		1.24		1.55	ns
$t_{ESBDATACO2}$		2.39		3.35		4.94	ns
t_{ESBDD}		3.50		4.90		7.23	ns
t_{PD}		1.72		2.41		3.56	ns
$t_{PTERMSU}$	0.99		1.56		2.55		ns
$t_{PTERMCO}$		1.07		1.26		1.08	ns

Table 74. EP20K200E f_{MAX} ESB Timing Microparameters

Symbol	-1		-2		-3		Unit
	Min	Max	Min	Max	Min	Max	
t_{ESBARC}		1.68		2.06		2.24	ns
t_{ESBSRC}		2.27		2.77		3.18	ns
t_{ESBAWC}		3.10		3.86		4.50	ns
t_{ESBSWC}		2.90		3.67		4.21	ns
$t_{ESBWASU}$	0.55		0.67		0.74		ns
t_{ESBWAH}	0.36		0.46		0.48		ns
$t_{ESBWDSU}$	0.69		0.83		0.95		ns
t_{ESBWDH}	0.36		0.46		0.48		ns
$t_{ESBRASU}$	1.61		1.90		2.09		ns
t_{ESBRAH}	0.00		0.00		0.01		ns
$t_{ESBWESU}$	1.42		1.71		2.01		ns
t_{ESBWEH}	0.00		0.00		0.00		ns
$t_{ESBDATASU}$	-0.06		-0.07		0.05		ns
$t_{ESBDATAH}$	0.13		0.13		0.13		ns
$t_{ESBWADDRSU}$	0.11		0.13		0.31		ns
$t_{ESBRADDRSU}$	0.18		0.23		0.39		ns
$t_{ESBDATACO1}$		1.09		1.35		1.51	ns
$t_{ESBDATACO2}$		2.19		2.75		3.22	ns
t_{ESBDD}		2.75		3.41		4.03	ns
t_{PD}		1.58		1.97		2.33	ns
$t_{PTERMSU}$	1.00		1.22		1.51		ns
$t_{PTERMCO}$		1.10		1.37		1.09	ns

Table 75. EP20K200E f_{MAX} Routing Delays

Symbol	-1		-2		-3		Unit
	Min	Max	Min	Max	Min	Max	
t_{F1-4}		0.25		0.27		0.29	ns
t_{F5-20}		1.02		1.20		1.41	ns
t_{F20+}		1.99		2.23		2.53	ns

Table 86. EP20K400E f_{MAX} ESB Timing Microparameters

Symbol	-1 Speed Grade		-2 Speed Grade		-3 Speed Grade		Unit
	Min	Max	Min	Max	Min	Max	
t_{ESBARC}		1.67		1.91		1.99	ns
t_{ESBSRC}		2.30		2.66		2.93	ns
t_{ESBAWC}		3.09		3.58		3.99	ns
t_{ESBSWC}		3.01		3.65		4.05	ns
$t_{ESBWASU}$	0.54		0.63		0.65		ns
t_{ESBWAH}	0.36		0.43		0.42		ns
$t_{ESBWDSU}$	0.69		0.77		0.84		ns
t_{ESBWDH}	0.36		0.43		0.42		ns
$t_{ESBRASU}$	1.61		1.77		1.86		ns
t_{ESBRAH}	0.00		0.00		0.01		ns
$t_{ESBWESU}$	1.35		1.47		1.61		ns
t_{ESBWEH}	0.00		0.00		0.00		ns
$t_{ESBDATASU}$	-0.18		-0.30		-0.27		ns
$t_{ESBDATAH}$	0.13		0.13		0.13		ns
$t_{ESBWADDRSU}$	-0.02		-0.11		-0.03		ns
$t_{ESBRADDRSU}$	0.06		-0.01		-0.05		ns
$t_{ESBDATACO1}$		1.16		1.40		1.54	ns
$t_{ESBDATACO2}$		2.18		2.55		2.85	ns
t_{ESBDD}		2.73		3.17		3.58	ns
t_{PD}		1.57		1.83		2.07	ns
$t_{PTERMSU}$	0.92		0.99		1.18		ns
$t_{PTERMCO}$		1.18		1.43		1.17	ns

Table 94. EP20K600E Minimum Pulse Width Timing Parameters

Symbol	-1 Speed Grade		-2 Speed Grade		-3 Speed Grade		Unit
	Min	Max	Min	Max	Min	Max	
t_{CH}	2.00		2.50		2.75		ns
t_{CL}	2.00		2.50		2.75		ns
t_{CLRP}	0.18		0.26		0.34		ns
t_{PREP}	0.18		0.26		0.34		ns
t_{ESBCH}	2.00		2.50		2.75		ns
t_{ESBCL}	2.00		2.50		2.75		ns
t_{ESBWP}	1.17		1.68		2.18		ns
t_{ESBRP}	0.95		1.35		1.76		ns

Table 95. EP20K600E External Timing Parameters

Symbol	-1 Speed Grade		-2 Speed Grade		-3 Speed Grade		Unit
	Min	Max	Min	Max	Min	Max	
t_{INSU}	2.74		2.74		2.87		ns
t_{INH}	0.00		0.00		0.00		ns
t_{OUTCO}	2.00	5.51	2.00	6.06	2.00	6.61	ns
$t_{INSUPLL}$	1.86		1.96		-		ns
t_{INHPLL}	0.00		0.00		-		ns
$t_{OUTCOPLL}$	0.50	2.62	0.50	2.91	-	-	ns

Table 96. EP20K600E External Bidirectional Timing Parameters

Symbol	-1 Speed Grade		-2 Speed Grade		-3 Speed Grade		Unit
	Min	Max	Min	Max	Min	Max	
$t_{INSUBIDIR}$	0.64		0.98		1.08		ns
$t_{INHBIDIR}$	0.00		0.00		0.00		ns
$t_{OUTCOBIDIR}$	2.00	5.51	2.00	6.06	2.00	6.61	ns
$t_{XZBIDIR}$		6.10		6.74		7.10	ns
$t_{ZXBIDIR}$		6.10		6.74		7.10	ns
$t_{INSUBIDIRPLL}$	2.26		2.68		-		ns
$t_{INHBIDIRPLL}$	0.00		0.00		-		ns
$t_{OUTCOBIDIRPLL}$	0.50	2.62	0.50	2.91	-	-	ns
$t_{XZBIDIRPLL}$		3.21		3.59		-	ns
$t_{ZXBIDIRPLL}$		3.21		3.59		-	ns

101 Innovation Drive
San Jose, CA 95134
(408) 544-7000
http://www.altera.com
Applications Hotline:
(800) 800-EPLD
Customer Marketing:
(408) 544-7104
Literature Services:
lit_req@altera.com

Copyright © 2004 Altera Corporation. All rights reserved. Altera, The Programmable Solutions Company, the stylized Altera logo, specific device designations, and all other words and logos that are identified as trademarks and / or service marks are, unless noted otherwise, the trademarks and service marks of Altera Corporation in the U.S. and other countries. All other product or service names are the property of their respective holders. Altera products are protected under numerous U.S. and foreign patents and pending applications, mask work rights, and copyrights. Altera warrants performance of its semiconductor products to current specifications in accordance with Altera's standard warranty, but reserves the right to make changes to any products and services at any time without notice. Altera assumes no responsibility or liability arising out of the application or use of any information, product, or service described herein except as expressly agreed to in writing by Altera Corporation. Altera customers are advised to obtain the latest version of device specifications before relying on any published information and before placing orders for products or services.

I.S. EN ISO 9001