Lattice Semiconductor Corporation - M5-128/68-15VC/1 Datasheet

Welcome to E-XFL.COM

Understanding Embedded - CPLDs (Complex Programmable Logic Devices)

Embedded - CPLDs, or Complex Programmable Logic Devices, are highly versatile digital logic devices used in electronic systems. These programmable components are designed to perform complex logical operations and can be customized for specific applications. Unlike fixed-function ICs, CPLDs offer the flexibility to reprogram their configuration, making them an ideal choice for various embedded systems. They consist of a set of logic gates and programmable interconnects, allowing designers to implement complex logic circuits without needing custom hardware.

Applications of Embedded - CPLDs

Details	
Product Status	Obsolete
Programmable Type	In System Programmable
Delay Time tpd(1) Max	15 ns
Voltage Supply - Internal	4.75V ~ 5.25V
Number of Logic Elements/Blocks	-
Number of Macrocells	128
Number of Gates	-
Number of I/O	68
Operating Temperature	0°C ~ 70°C (TA)
Mounting Type	Surface Mount
Package / Case	100-LQFP
Supplier Device Package	100-TQFP (14x14)
Purchase URL	https://www.e-xfl.com/product-detail/lattice-semiconductor/m5-128-68-15vc-1

and both the 3.3-V and the 5-V device versions are in-system programmable through an IEEE 1149.1 Test Access Port (TAP) interface.

FUNCTIONAL DESCRIPTION

The MACH 5 architecture consists of PAL blocks connected by two levels of interconnect. The **block interconnect** provides routing among 4 PAL blocks. This grouping of PAL blocks joined by the block interconnect is called a **segment**. The second level of interconnect, the **segment interconnect**, ties all of the segments together. The only logic difference between any two MACH 5 devices is the number of segments. Therefore, once a designer is familiar with one device, consistent performance can be expected across the entire family. All devices have four clock pins available which can also be used as logic inputs.

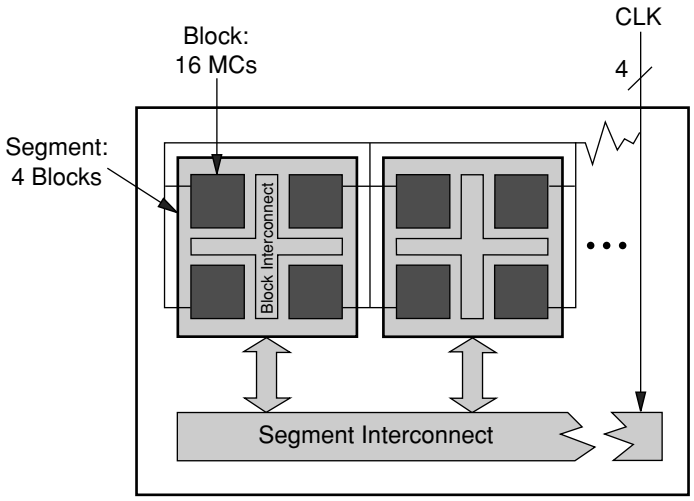

20446G-001

Figure 1. MACH 5 Block Diagram

The MACH 5 PAL blocks consist of the elements listed below (Figure 2). While each PAL block resembles an independent PAL device, it has superior control and logic generation capabilities.

- I/O cells
- Product-term array and Logic Allocator
- Macrocells
- Register control generator
- Output enable generator

I/O Cells

The I/Os associated with each PAL block have a path directly back to that PAL block called **local feedback**. If the I/O is used in another PAL block, the **interconnect feeder** assigns a **block interconnect** line to that signal. The interconnect feeder acts as an input switch matrix. The block and segment interconnects provide connections between any two signals in a device. The **block feeder** assigns block interconnect lines and local feedback lines to the PAL block inputs.

Select devices have been discontinued.
See Ordering Information section for product status.

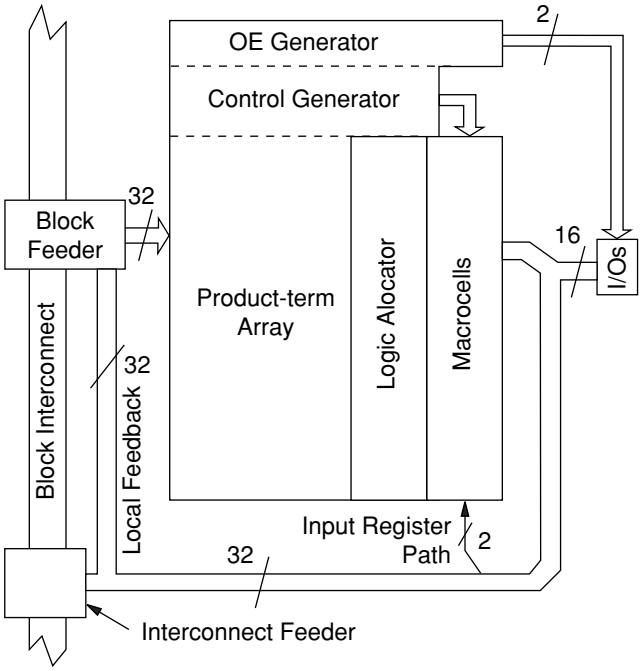

20446G-002

Figure 2. PAL Block Structure

Product-Term Array and Logic Allocator

The product-term array uses the same sum-of-products architecture as PAL devices and consists of 32 inputs (plus their complements) and 64 product terms arranged in 16 **clusters**. A cluster is a sum-of-products function with either 3 of 4 product terms.

Logic allocators assign the clusters to macrocells. Each macrocell can accept up to eight clusters of three or four product terms, but a given cluster can only be steered to one macrocell (Table 4). If only three product terms in a cluster are steered, the fourth can be used as an input to an XOR gate for separate logic generation and/or polarity control.

The **wide logic allocator** is comprised of all 16 of the individual logic allocators and acts as an output switch matrix by reassigning logic to macrocells to retain pinout as designs change. The logic allocation scheme in the MACH 5 device allows for the implementation of large equations (up to 32 product terms) with only one pass through the logic array.

Table 4. Product Term Steering Options for PT Clusters and Macrocells

Macrocell	Available Clusters	Macrocell	Available Clusters
M_0	C_0, C_1, C_2, C_3, C_4	M_8	$C_5, C_6, C_7, C_8, C_9, C_{10}, C_{11}, C_{12}$
M_1	$C_0, C_1, C_2, C_3, C_4, C_5$	M_9	$C_6, C_7, C_8, C_9, C_{10}, C_{11}, C_{12}, C_{13}$
M_2	$C_0, C_1, C_2, C_3, C_4, C_5, C_6$	M_{10}	$C_7, C_8, C_9, C_{10}, C_{11}, C_{12}, C_{13}, C_{14}$
M_3	$C_0, C_1, C_2, C_3, C_4, C_5, C_6, C_7$	M_{11}	$C_8, C_9, C_{10}, C_{11}, C_{12}, C_{13}, C_{14}, C_{15}$
M_4	$C_0, C_1, C_2, C_3, C_4, C_5, C_6, C_7$	M_{12}	$C_8, C_9, C_{10}, C_{11}, C_{12}, C_{13}, C_{14}, C_{15}$
M_5	$C_1, C_2, C_3, C_4, C_5, C_6, C_7, C_8$	M_{13}	$C_9, C_{10}, C_{11}, C_{12}, C_{13}, C_{14}, C_{15}$
M_6	$C_2, C_3, C_4, C_5, C_6, C_7, C_8, C_9$	M_{14}	$C_{10}, C_{11}, C_{12}, C_{13}, C_{14}, C_{15}$
M_7	$C_3, C_4, C_5, C_6, C_7, C_8, C_9, C_{10}$	M_{15}	$C_{11}, C_{12}, C_{13}, C_{14}, C_{15}$

Select devices have been discontinued.
See Ordering Information section for product status.

Macrocells

The macrocells for MACH 5 devices consist of a storage element which can be configured for combinatorial, registered or latched operation (Figure 3). The D-type flip-flops can be configured as T-type, J-K, or S-R operation through the use of the XOR gate associated with each macrocell.

Each PAL block has the capability to provide two input registers by using macrocells 0 and 15. In order to use this option, these macrocells must be accessed via the I/O pins associated with macrocells 3 and 12, respectively. Once the macrocell is used as an input register, it cannot be used for logic, so its clusters can be re-directed through the logic allocator to another macrocell. The
I/O pins associated with macrocells 0 and 15 can still be used as input pins. Although the I/O pins for macrocells 3 and 12 are used to connect to the input registers, these macrocells can still be used as "buried" macrocells to drive device logic via the matrix.

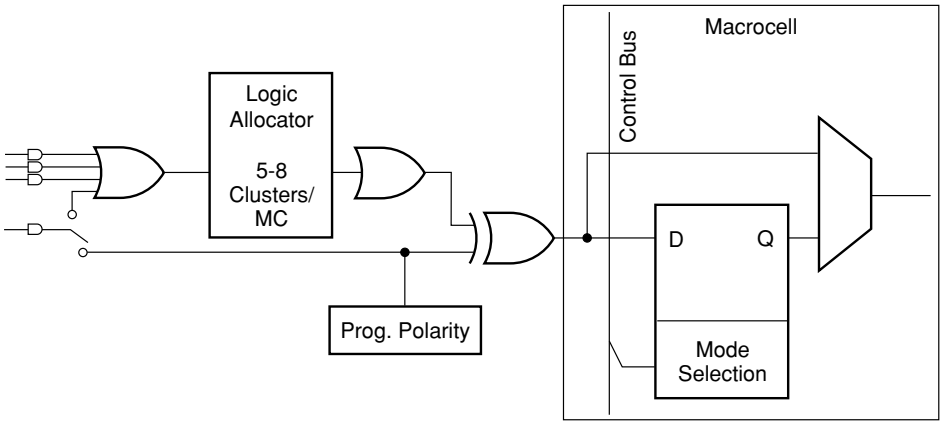

Figure 3. Macrocell Diagram

Control Generator

The control generator provides four configurable clock lines and three configurable set/reset lines to each macrocell in a PAL block. Any of the four clock lines and any of the three set/reset lines can be independently selected by any flip-flop within a block. The clock lines can be configured to provide synchronous global (pin) clocks and asynchronous product term clocks, sum term clocks, and latch enables (Figure 4). Three of the four global clocks, as well as two product-term clocks and one sum-term clock, are available per PAL block. Positive or negative edge clocking is available as well as advanced clocking features such as **complementary** and **biphase** clocking. Complementary clocking provides two clock lines exactly 180 degrees out of phase, and is useful in applications such as fast data paths. A biphase clock line clocks flip-flops on both the positive and negative edges of the clock. The configuration options for the four clock lines per PAL block are as follows:

Clock Line 0 Options

- Global clock (0, 1, 2, or 3) with positive or negative edge clock enable
- Product-term clock (A*B*C)
- Sum-term clock (A+B+C)

Clock Line 1 Options

- Global clock (0, 1, 2, or 3) with positive edge clock enable
- Global clock (0, 1, 2, or 3) with negative edge clock enable

Select devices have been discontinued.
See Ordering Information section for product status.

- Global clock (0, 1, 2, or 3) with positive and negative edge clock enable (biphase)

Clock Line 2 Options

- Global clock (0, 1, 2, or 3) with clock enable

Clock Line 3 Options

- Complement of clock line 2 (same clock enable)
- Product-term clock (if clock line 2 does not use clock enable

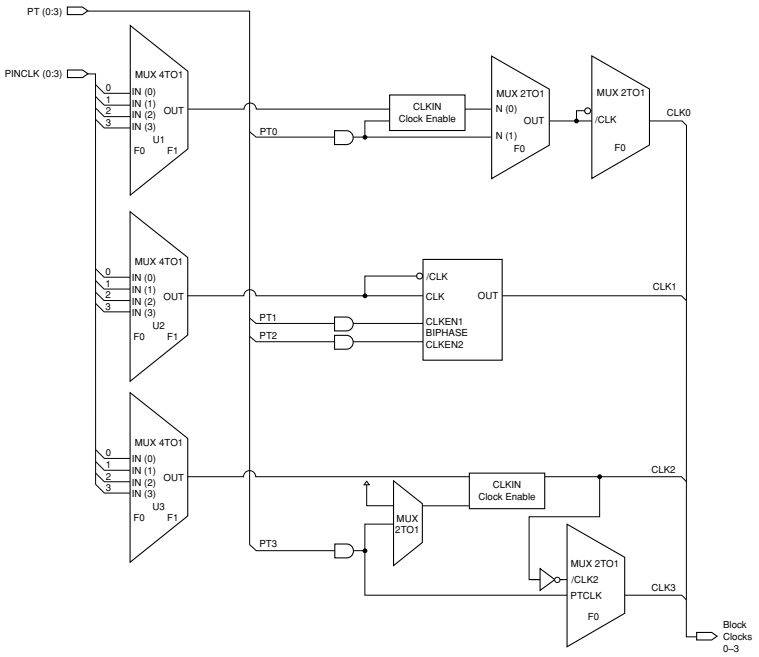

20446G-004

Figure 4. Clock Generator

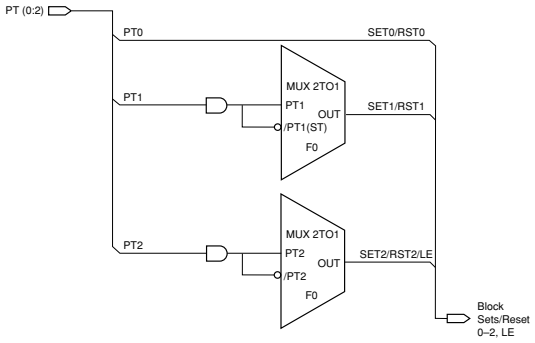

20446G-005

Figure 5. Set/Reset Generator

The set/reset generation portion of the control generator (Figure 5) creates three set/reset lines for the PAL block. Each macrocell can choose one of these three lines or choose no set/reset at all. All three lines can be configured for product term set/reset and two of the three lines can be configured as sum term set/reset and one of the lines can be configured as product-term or sum-term latch enable. While the set/reset signals are generated in the control generator, whether that signal sets or resets a flip-flop is determined within the individual macrocell. The same signal can set one flip-flop and reset another. PT2 or /PT2 can also be used as a latch enable for macrocells configured as latches.

Select devices have been discontinued.
See Ordering Information section for product status.

OE Generator

There is one output enable (OE) generator per PAL block that generates two product-term driven output enables. Each I/O cell is simply an output buffer. Each I/O cell within the PAL block can choose to be permanently enabled, permanently disabled, or choose one of the two product term output enables per PAL block (Figure 6).

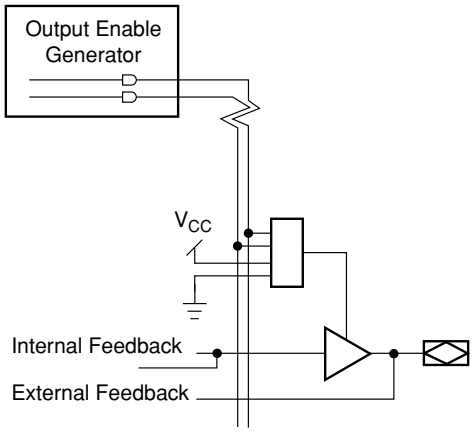

20446G-006

Figure 6. Output Enable Generator and I/O Cell

Select devices have been discontinued.
See Ordering Information section for product status.

BLOCK DIAGRAM — M5(LV)-256/XXX

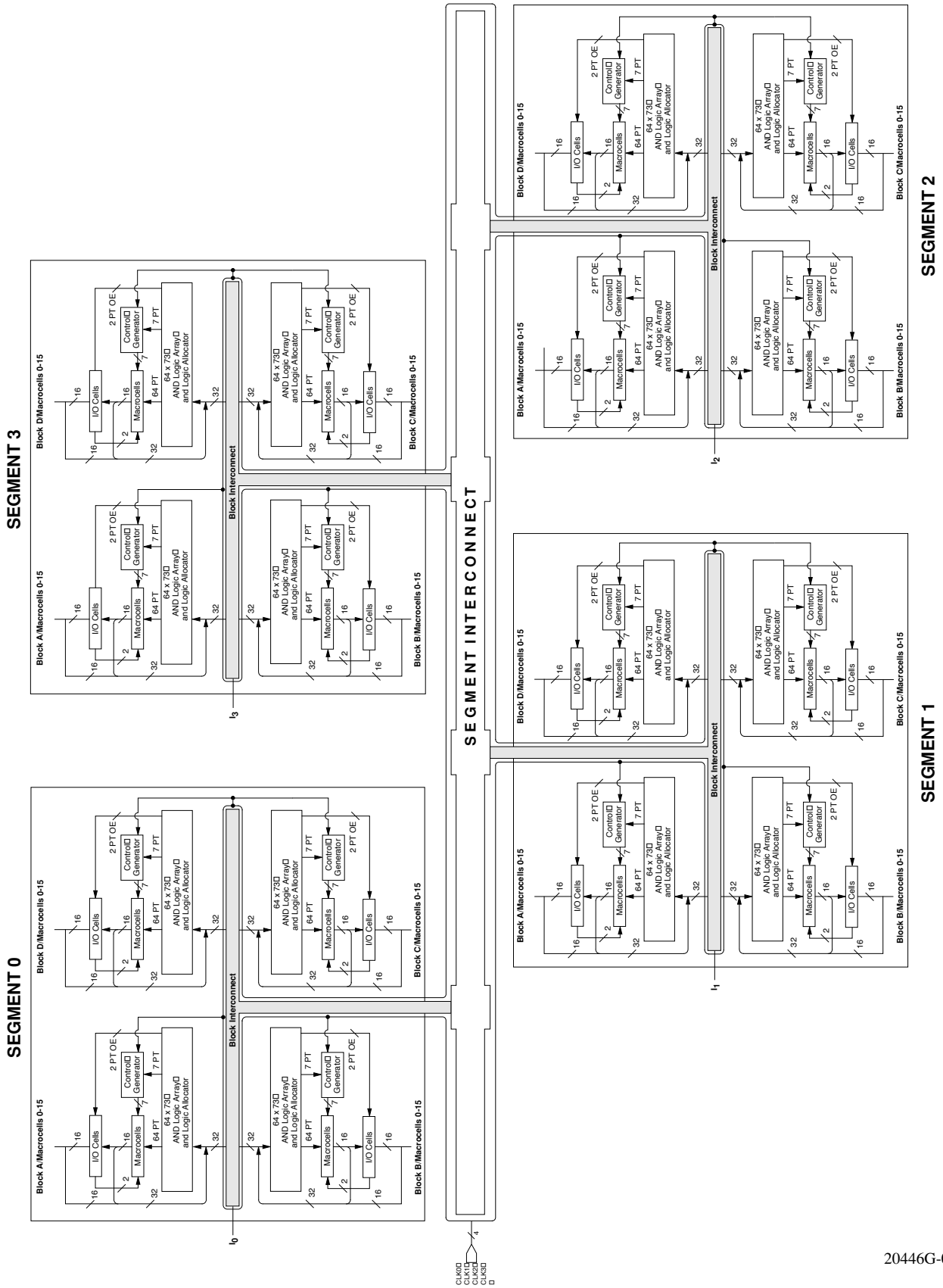

Select devices have been discontinued.
See Ordering Information section for product status.

BLOCK DIAGRAM — M5(LV)-320/XXX

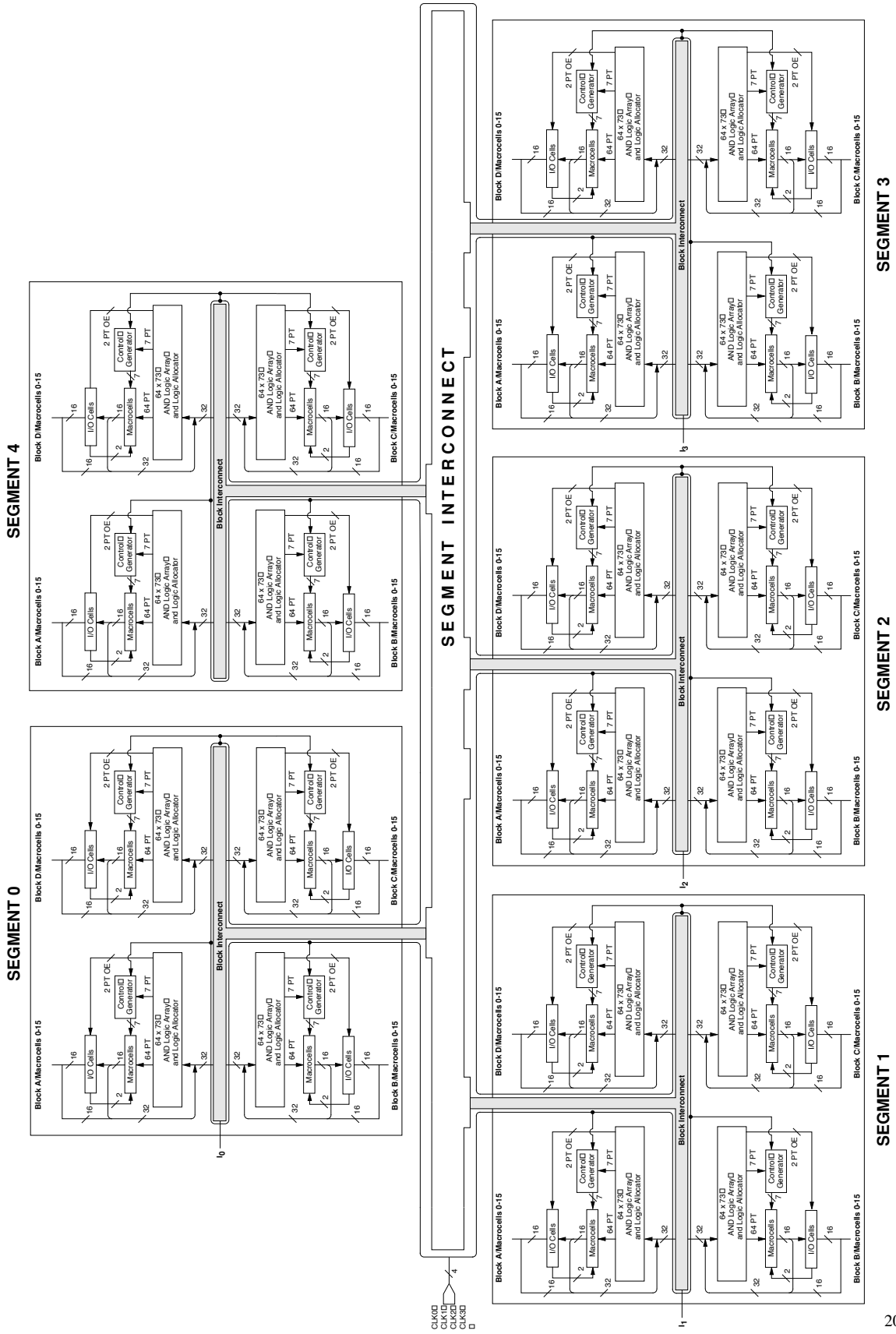

20446G-010

Select devices have been discontinued.
See Ordering Information section for product status.

BLOCK DIAGRAM — M5(LV)-384/XXX

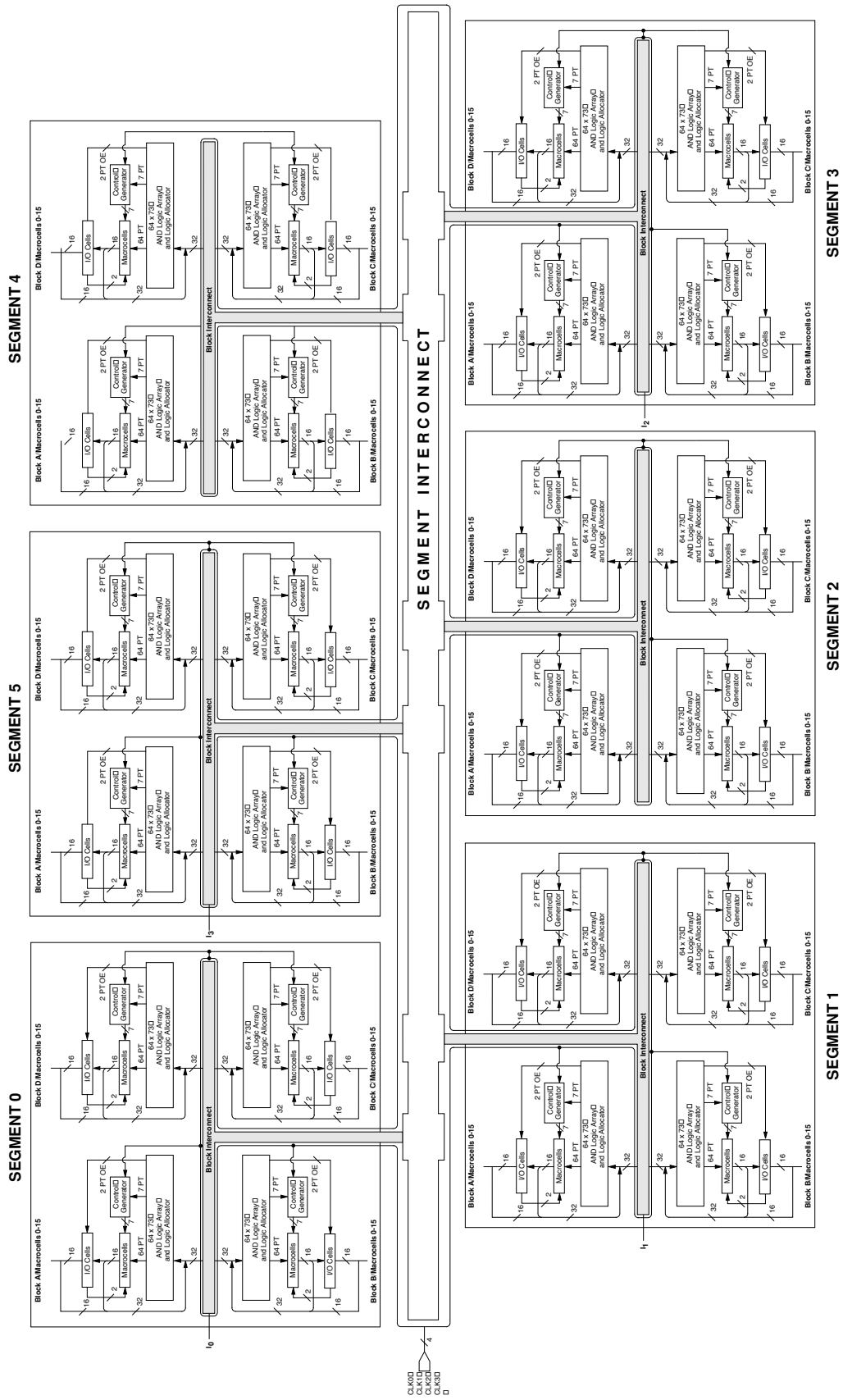

20446G-011

Select devices have been discontinued.
See Ordering Information section for product status.

ABSOLUTE MAXIMUM RATINGS

M5

Storage Temperature . . . . . -65°C to +150°C

Device Junction
Temperature (Note 1) . . . . . +130°C or +150°C

Supply Voltage
with Respect to Ground . . . . . -0.5 V to +7.0 V

DC Input Voltage . . . . . -0.5 V to 5.5 V

Static Discharge Voltage . . . . . 2000 V

Latchup Current (-40°C to +85°C) . . . . . 200 mA

Stresses above those listed under Absolute Maximum Ratings may cause permanent device failure. Functionality at or above these limits is not implied. Exposure to Absolute Maximum Ratings for extended periods may affect device reliability.

OPERATING RANGES

Commercial (C) Devices

Ambient Temperature (T_A)
Operating in Free Air . . . . . 0°C to +70°C

Supply Voltage (V_{CC})
with Respect to Ground . . . . . +4.75 V to +5.25 V

Industrial (I) Devices

Ambient Temperature (T_A)
Operating in Free Air . . . . . -40°C to +85°C

Supply Voltage (V_{CC})
with Respect to Ground . . . . . +4.5 V to +5.5 V

Operating ranges define those limits between which the functionality of the device is guaranteed.

5-V DC CHARACTERISITICS OVER OPERATING RANGES

Parameter Symbol	Parameter Description	Test Description	Min	Typ	Max	Unit
V_{OH}	Output HIGH Voltage (For M5-128/1, M5-192/1, M5-256/1, M5-320, M5-384, M5-512 Devices)	I_{OH} = -3.2 mA, V_{CC} = Min, V_{IN} = V_{IH} or V_{IL}	2.4			V
		I_{OH} = -100 µA, V_{CC} = Max, V_{IN} = V_{IH} or V_{IL}		3.3	3.6	V
	Output HIGH Voltage (For M5-128, M5-192, M5-256 Devices)	I_{OH} = -3.2 mA, V_{CC} = Min, V_{IN} = V_{IH} or V_{IL}	2.4			V
		I_{OH} = -2.5 mA, V_{CC} = 5.25 V, V_{IN} = V_{IH} or V_{IL}			3.6	V
V_{OL}	Output LOW Voltage (Note 2)	I_{OL} = +16 mA, V_{CC} = Min, V_{IN} = V_{IH} or V_{IL}			0.5	V
V_{IH}	Input HIGH Voltage	Guaranteed Input Logical HIGH Voltage for all Inputs (Note 3)	2.0			V
V_{IL}	Input LOW Voltage	Guaranteed Input Logical LOW Voltage for all Inputs (Note 3)			0.8	V
I_{IH}	Input HIGH Leakage Current	V_{IN} = 5.25, V_{CC} = Max (Note 4)			10	µA
I_{IL}	Input LOW Leakage Current	V_{IN} = 0, V_{CC} = Max (Note 4)			-10	µA
I_{OZH}	Off-State Output Leakage Current HIGH	V_{OUT} = 5.25, V_{CC} = Max, V_{IN} = V_{IH} or V_{IL} (Note 4)			10	µA
I_{OZL}	Off-State Output Leakage Current LOW	V_{OUT} = 0, V_{CC} = Max, V_{IN} = V_{IH} or V_{IL} (Note 4)			-10	µA
I_{SC}	Output Short-Circuit Current	V_{OUT} = 0.5 V_{CC} = Max, V_{IN} = V_{IH} or V_{IL} (Note 5)	-30		-180	mA

Note:

1. *150° for M5-128, M5-192 and M5-256 devices. 130° for M5-128/1, M5-192/1, M5-256/1, M5-320, M5-384 and M5-512 devices.*
2. *Total I_{OL} between ground pins should not exceed 64 mA.*
3. *These are absolute values with respect to device ground, and all overshoots due to system and/or tester noise are included.*
4. *I/O pin leakage is the worst case of I_{IL} and I_{OZL} or I_{IH} and I_{OZH}.*
5. *Not more than one output should be shorted at a time. Duration of the short-circuit should not exceed one second.*

Select devices have been discontinued.
See Ordering Information section for product status.

ABSOLUTE MAXIMUM RATINGS

M5LV

Storage Temperature. . . . . -65°C to +150°C

Device Junction Temperature. . . . . +130°C

Supply Voltage
with Respect to Ground . . . . . -0.5 V to +4.5 V

DC Input Voltage . . . . . -0.5 V to 5.5 V

Static Discharge Voltage . . . . . 2000 V

Latchup Current (-40°C to +85°C) . . . . . 200 mA

Stresses above those listed under Absolute Maximum Ratings may cause permanent device failure. Functionality at or above these limits is not implied. Exposure to Absolute Maximum Ratings for extended periods may affect device reliability.

OPERATING RANGES

Commercial (C) Devices

Ambient Temperature (T_A)
Operating in Free Air. . . . . 0°C to +70°C

Supply Voltage (V_{CC})
with Respect to Ground. . . . . +3.0 V to +3.6 V

Industrial (I) Devices

Ambient Temperature (T_A)
Operating in Free Air. . . . . -40°C to +85°C

Supply Voltage (V_{CC})
with Respect to Ground. . . . . +3.0 V to +3.6 V

Operating ranges define those limits between which the functionality of the device is guaranteed.

3.3-V DC CHARACTERISITICS OVER OPERATING RANGES

Parameter Symbol	Parameter Description	Test Description		Min	Max	Unit
V_{OH}	Output HIGH Voltage	V_{CC} = Min	I_{OH} = -100 µA	V_{CC} -0.2		V
		V_{IN} = V_{IH} or V_{IL}	I_{OH} = 3.2 mA	2.4		V
V_{OL}	Output LOW Voltage	V_{CC} = Min	I_{OL} = 100 µA		0.2	V
		V_{IN} = V_{IH} or V_{IL}	I_{OL} = 16 mA (Note 1)		0.5	V
V_{IH}	Input HIGH Voltage	$V_{OUT} \geq V_{OH}$ Min or $V_{OUT} \leq V_{OL}$ Max (Note 2)		2.0	5.5	V
V_{IL}	Input LOW Voltage	$V_{OUT} \geq V_{OH}$ Min or $V_{OUT} \leq V_{OL}$ Max (Note 2)		-0.3	0.8	V
I_{IH}	Input HIGH Leakage Current	V_{IN} = 3.6, V_{CC} = Max (Note 3)			10	µA
I_{IL}	Input LOW Leakage Current	V_{IN} = 0, V_{CC} = Max (Note 3)			-10	µA
I_{OZH}	Off-State Output Leakage Current HIGH	V_{OUT} = 3.6, V_{CC} = Max, V_{IN} = V_{IH} or V_{IL} (Note 3)			10	µA
I_{OZL}	Off-State Output Leakage Current LOW	V_{OUT} = 0, V_{CC} = Max, V_{IN} = V_{IH} or V_{IL} (Note 3)			-10	µA
I_{SC}	Output Short-Circuit Current	V_{OUT} = 0.5 V_{CC} = Max, V_{IN} = V_{IH} or V_{IL} (Note 4)		-15	-160	mA

Notes:

1. *Total I_{OL} between ground pins should not exceed 64 mA.*
2. *These are absolute values with respect to device ground, and all overshoots due to system and/or tester noise are included.*
3. *I/O pin leakage is the worst case of I_{IL} and I_{OZL} or I_{IH} and I_{OZH}.*
4. *Not more than one output should be shorted at one time. Duration of the short-circuit should not exceed one second.*

Select devices have been discontinued.
See Ordering Information section for product status.

M5(LV) TIMING PARAMETERS OVER OPERATING RANGES[1]

		-5		-6		-7		-10		-12		-15		-20		
		Min	Max	Min	Max	Min	Max	Min	Max	Min	Max	Min	Max	Min	Max	Unit
Combinatorial Delay:																
t_{PDi}	Internal combinatorial propagation delay		3.5		4.5		5.5		8.0		10.0		13.0		18.0	ns
t_{PD}	Combinatorial propagation delay		5.5		6.5		7.5		10.0		12.0		15.0		20.0	ns
Registered Delays:																
t_{SS}	Synchronous clock setup time	3.0		3.0		4.0		5.0		6.0		8.0		10.0		ns
t_{SA}	Asynchronous clock setup time	3.0		3.0		4.0		5.0		6.0		7.0		8.0		ns
t_{HS}	Synchronous clock hold time	0.0		0.0		0.0		0.0		0.0		0.0		0.0		ns
t_{HA}	Asynchronous clock hold time	3.0		3.0		4.0		5.0		6.0		7.0		8.0		ns
t_{COSi}	Synchronous clock to internal output		2.5		3.0		4.0		5.0		6.0		8.0		10.0	ns
t_{COS}	Synchronous clock to output		4.5		5.0		6.0		7.0		8.0		10.0		12.0	ns
t_{COAi}	Asynchronous clock to internal output		6.0		6.0		8.0		10.0		13.0		15.0		18.0	ns
t_{COA}	Asynchronous clock to output		8.0		8.0		10.0		12.0		15.0		17.0		20.0	ns
Latched Delays:																
t_{SAL}	Latch setup time	3.0		4.0		4.0		5.0		6.0		7.0		8.0		ns
t_{HAL}	Latch hold time	3.0		3.0		4.0		5.0		6.0		7.0		8.0		ns
t_{PDLi}	Transparent latch internal		6.0		7.0		7.0		8.0		9.0		10.0		10.0	ns
t_{PDL}	Propagation delay through transparent latch		8.0		9.0		9.0		10.0		11.0		12.0		12.0	ns
t_{GOAi}	Gate to internal output		7.0		8.0		8.0		9.0		10.0		11.0		12.0	ns
t_{GOA}	Gate to output		9.0		10.0		10.0		11.0		12.0		13.0		14.0	ns
Input Register Delays:																
t_{SIRS}	Input register setup time using a synchronous clock	2.0		2.0		2.0		3.0		3.0		3.0		3.0		ns
t_{SIRA}	Input register setup time using an asynchronous clock	0.0		0.0		0.0		0.0		0.0		0.0		0.0		ns
t_{HIRS}	Input register hold time using a synchronous clock	3.0		3.0		3.0		4.0		4.0		4.0		4.0		ns
t_{HIRA}	Input register hold time using an asynchronous clock	6.0		6.0		6.0		7.0		7.0		7.0		7.0		ns
Input Latch Delays:																
t_{SIL}	Input latch setup time	2.0		2.0		2.0		3.0		3.0		3.0		3.0		ns
t_{HIL}	Input latch hold time	6.0		6.0		6.0		7.0		7.0		7.0		7.0		ns
t_{PDILi}	Transparent input latch		5.0		5.0		5.5		6.0		6.0		6.0		6.0	ns
Output Delays:																
t_{BUF}	Output buffer delay		2.0		2.0		2.0		2.0		2.0		2.0		2.0	ns
t_{SLW}	Slow slew rate delay		2.5		2.5		2.5		2.5		2.5		2.5		2.5	ns
t_{EA}	Output enable time		7.5		7.5		9.5		10.0		12.0		15.0		20.0	ns
t_{ER}	Output disable time		7.5		7.5		9.5		10.0		12.0		15.0		20.0	ns

Select devices have been discontinued.
See Ordering Information section for product status.

M5(LV) TIMING PARAMETERS OVER OPERATING RANGES[1] (CONTINUED)

		-5		-6		-7		-10		-12		-15		-20		
		Min	Max	Min	Max	Min	Max	Min	Max	Min	Max	Min	Max	Min	Max	Unit
Power Delays:																
t_{PL1}	Power level 1 delay (Note 2)		4.0 (5.0)		4.0		4.0 (5.0)		4.0 (5.0)		4.0 (5.0)		4.0 (5.0)		4.0 (5.0)	ns
t_{PL2}	Power level 2 delay (Note 2)		6.0 (9.0)		6.0		6.0 (9.0)		6.0 (9.0)		6.0 (9.0)		6.0 (9.0)		6.0 (9.0)	ns
t_{PL3}	Power level 3 delay (Note 2)		9.0 (17.5)		9.0		9.0 (17.5)		9.0 (17.5)		9.0 (17.5)		9.0 (17.5)		9.0 (17.5)	ns
Additional Cluster Delay:																
t_{PT}	Product term cluster delay		0.3		0.3		0.3		0.3		0.3		0.3		0.3	ns
Interconnect Delays:																
t_{BLK}	Block interconnect delay		1.5		1.5		1.5		2.0		2.0		2.0		2.0	ns
t_{SEG}	Segment interconnect delay		4.5		4.5		5.0		6.0		6.0		6.0		6.0	ns
Reset and Preset Delays:																
t_{SRi}	Asynchronous reset or preset to internal register output		6.0		8.0		8.0		10.0		12.0		14.0		16.0	ns
t_{SR}	Asynchronous reset or preset to register output		8.0		10.0		10.0		12.0		14.0		16.0		18.0	ns
t_{SRR}	Reset and set register recovery time	5.5		7.5		7.5		8.0		9.0		10.0		11.0		ns
t_{SRW}	Asynchronous reset or preset width	3.0		4.0		4.0		5.0		6.0		7.0		8.0		ns
Clock Enable Delays:																
t_{CES}	Clock enable setup time	4.0		5.0		5.0		6.0		7.0		7.0		8.0		ns
t_{CEH}	Clock enable hold time	3.0		4.0		4.0		5.0		6.0		6.0		7.0		ns
Width:																
t_{WLS}	Global clock width low (Note 3)	2.5		3.0		3.0		4.0		5.0		6.0		6.0		ns
t_{WHS}	Global clock width high (Note 3)	2.5		3.0		3.0		4.0		5.0		6.0		6.0		ns
t_{WLA}	Product term clock width low	3.0		4.0		4.0		5.0		6.0		7.0		8.0		ns
t_{WHA}	Product term clock width high	3.0		4.0		4.0		5.0		6.0		7.0		8.0		ns
t_{GWA}	Gate width low (for low transparent) or high (for high transparent)	3.0		4.0		4.0		5.0		6.0		7.0		8.0		ns
t_{WIR}	Input register clock width low or high	3.0		4.0		4.0		5.0		6.0		7.0		8.0		ns

Select devices have been discontinued.
See Ordering Information section for product status.

CAPACITANCE[1]

Parameter Symbol	Parameter Description	Test conditions		Typ	Unit
C_{IN}	I/CLK pin	V_{IN} =2.0 V	3.3 V or 5 V, 25º C, 1 MHz	12	pF
$C_{I/O}$	I/O pin	V_{OUT} =2.0 V	3.3 V or 5 V, 25º C, 1 MHz	10	pF

1. *These parameters are not 100% tested, but are calculated at initial characterization and at any time the design is modified where these parameters may be affected.*

I_{CC} vs. FREQUENCY

These curves represent the typical power consumption for a particular device at system frequency. The selected "typical" pattern is a 16-bit up-down counter. This pattern fills the device and exercises every macrocell. Maximum frequency shown uses internal feedback and a D-type register. Power/Speed are optimized to obtain the highest counter frequency and the lowest power. The highest frequency (LSBs) is placed in common PAL blocks, which are set to high power. The lowest frequency signals (MSBs) are placed in a common PAL block and set to lowest power. For a more detailed discussion about MACH 5 power consumption, refer to the application note entitled *MACH 5 Power* in the Application Notes section on the Lattice Data Book CD-ROM or Lattice web site.

I_{CC} CURVES AT HIGH /LOW POWER MODES

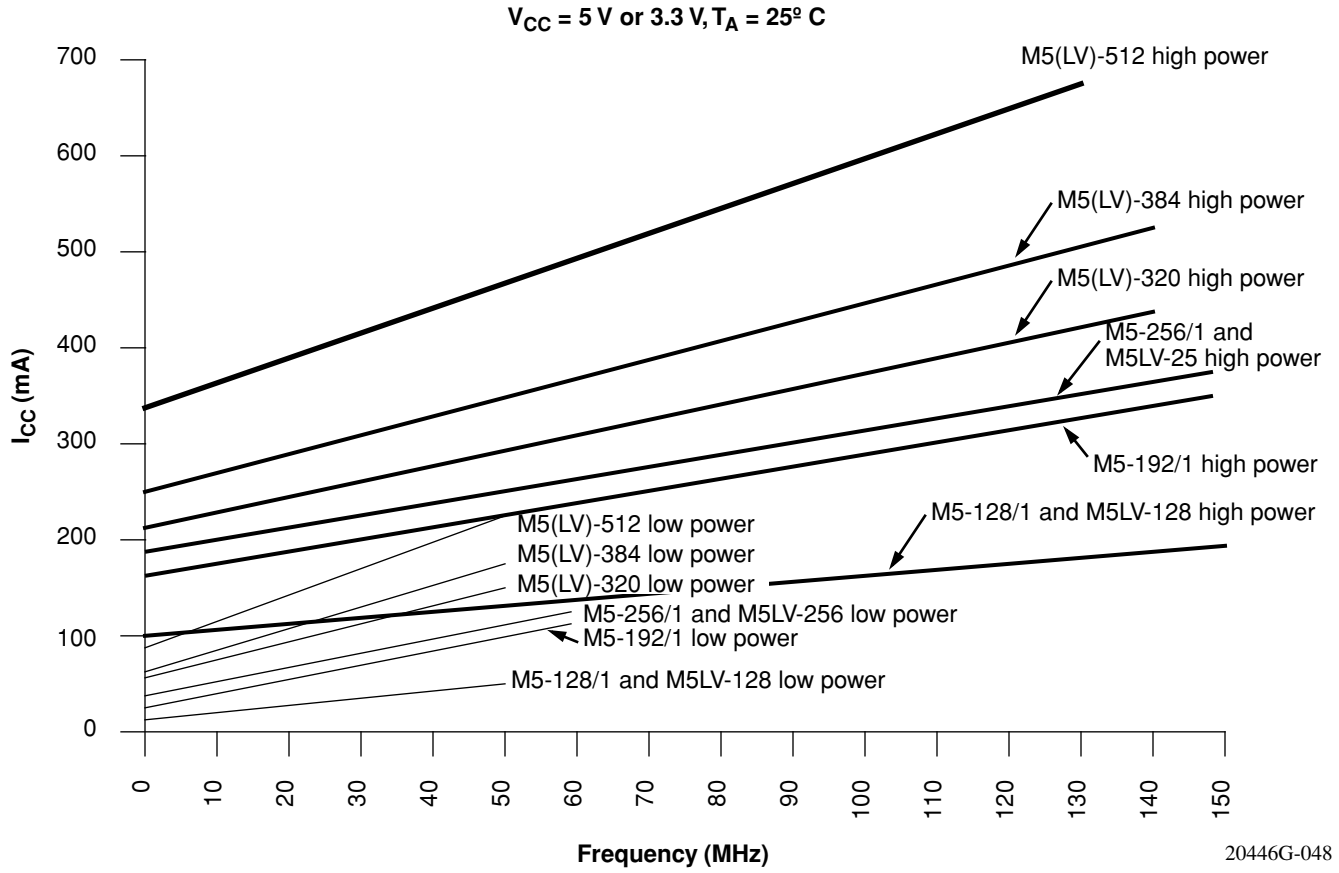

Figure 8. I_{CC} Curves at High/Low Power Modes

Select devices have been discontinued.
See Ordering Information section for product status.

100-PIN TQFP CONNECTION DIAGRAM – 74 I/O

Top View

100-Pin TQFP (74 I/O)

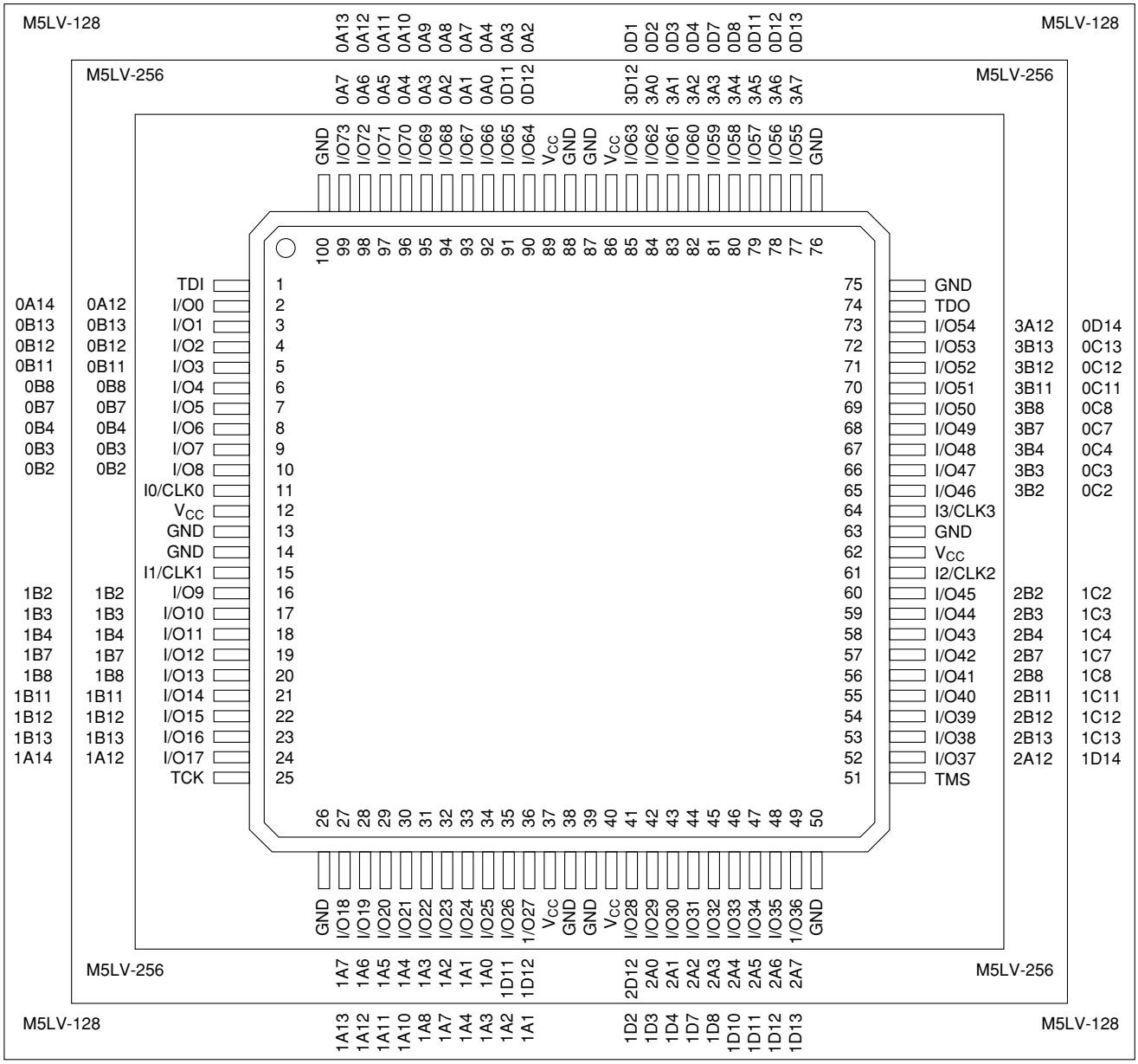

20446G-018

Select devices have been discontinued. See Ordering Information section for product status.

Pin Designations

CLK	=	Clock	V_{CC}	=	Supply Voltage
GND	=	Ground	TDI	=	Test Data In
I	=	Input	TCK	=	Test Clock
I/O	=	Input/Output	TMS	=	Test Mode Select
NC	=	No Connect	TDO	=	Test Data Out

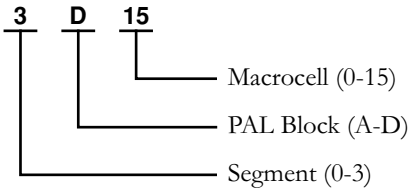

144-PIN PQFP CONNECTION DIAGRAM

Top View

144-Pin PQFP

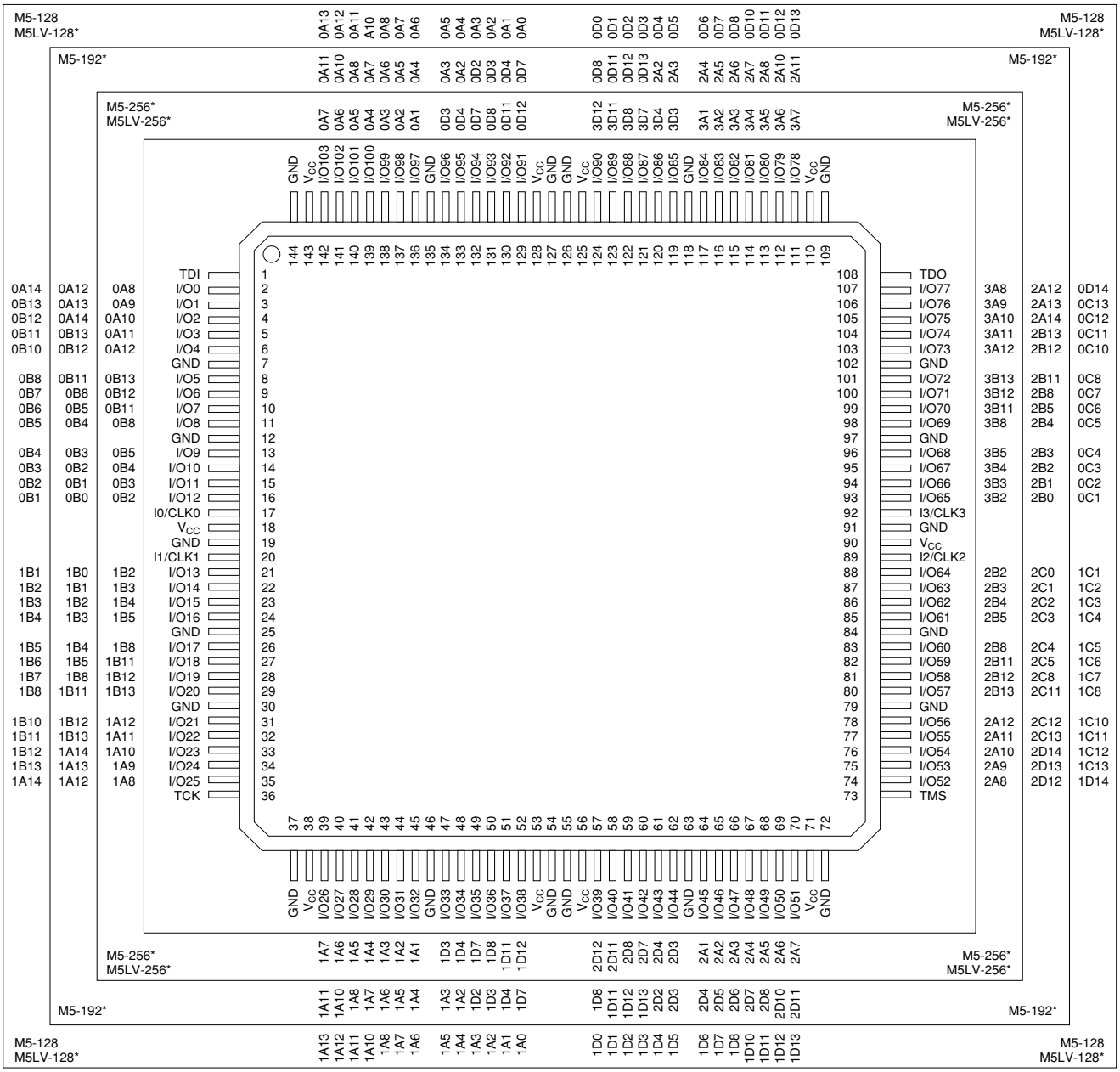

*Package obsolete, contact factory.

20446G-019

Pin Designations

CLK	=	Clock	V_{CC}	=	Supply Voltage
GND	=	Ground	TDI	=	Test Data In
I	=	Input	TCK	=	Test Clock
I/O	=	Input/Output	TMS	=	Test Mode Select
NC	=	No Connect	TDO	=	Test Data Out

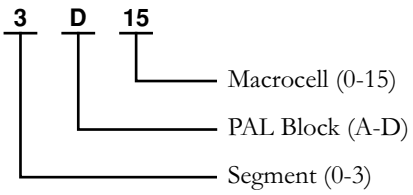

Select devices have been discontinued. See Ordering Information section for product status.

144-PIN TQFP CONNECTION DIAGRAM

Top View

144-Pin TQFP

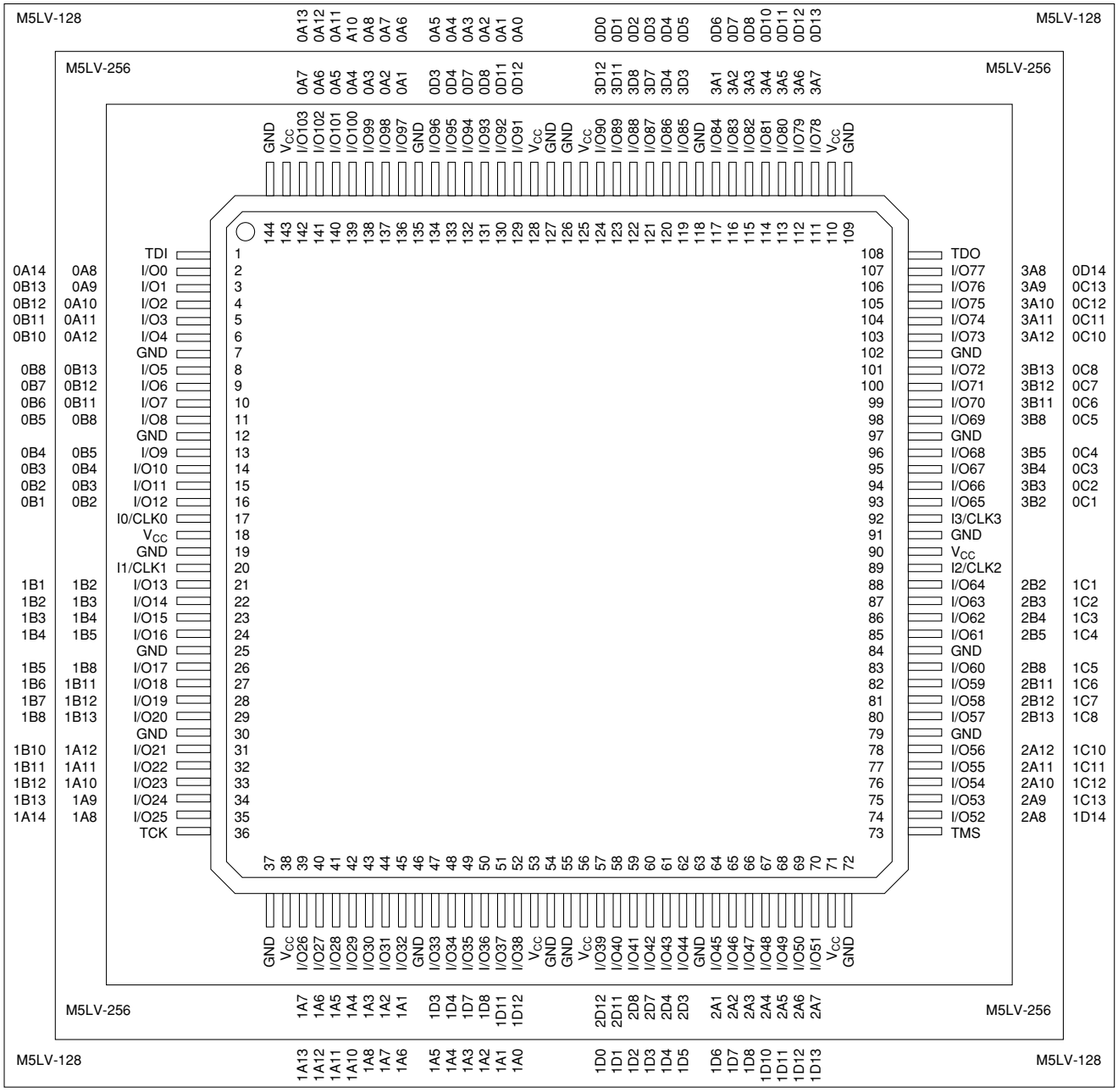

20446G-020

Select devices have been discontinued. See Ordering Information section for product status.

Pin Designations

CLK	=	Clock	V_{CC}	=	Supply Voltage
GND	=	Ground	TDI	=	Test Data In
I	=	Input	TCK	=	Test Clock
I/O	=	Input/Output	TMS	=	Test Mode Select
NC	=	No Connect	TDO	=	Test Data Out

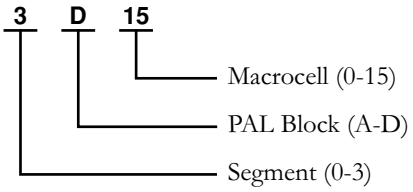

160-PIN PQFP CONNECTION DIAGRAM

Top View

160-Pin PQFP (128, 192, 256 Macrocells)

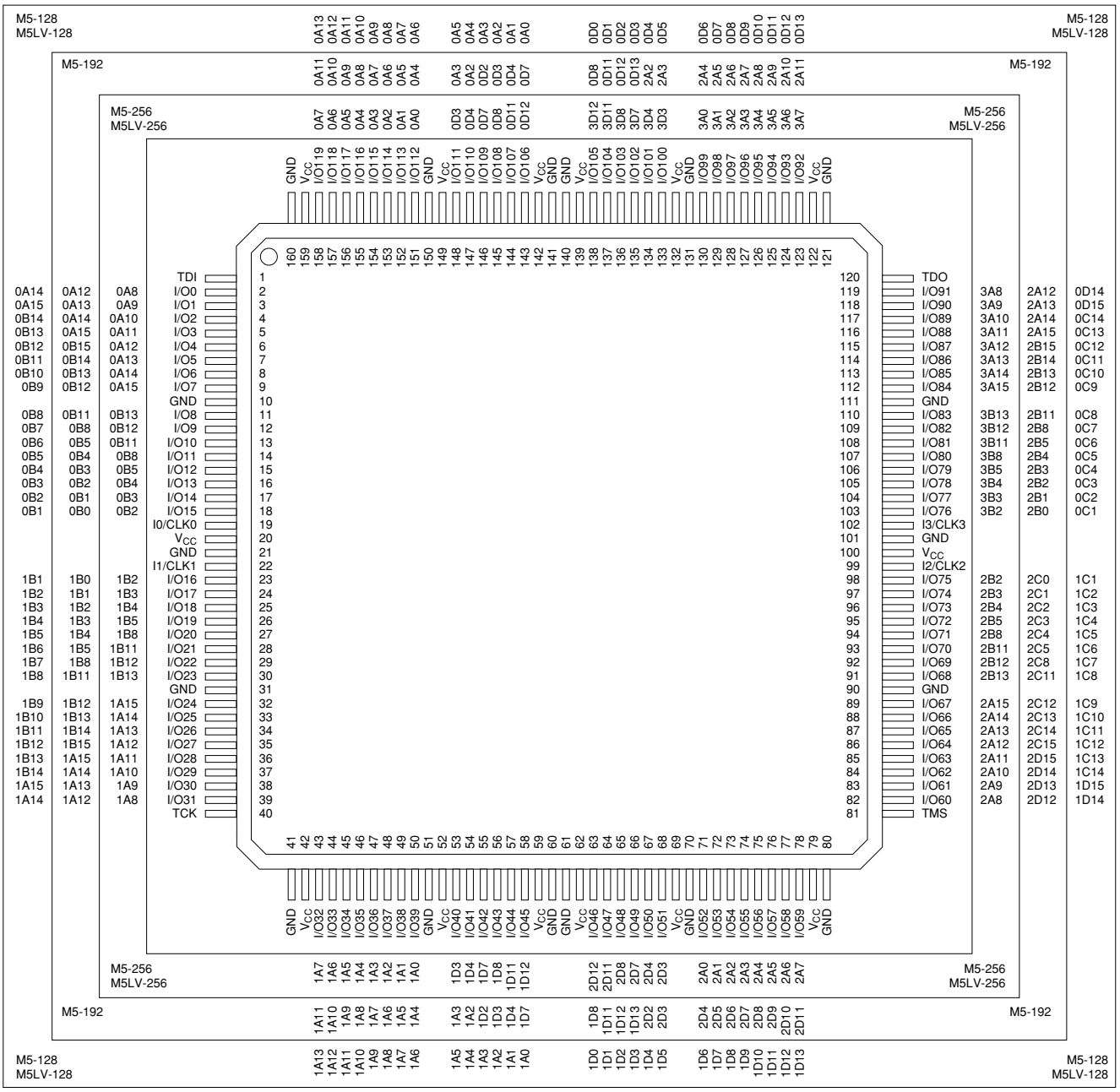

20446G-021

Select devices have been discontinued. See Ordering Information section for product status.

Pin Designations

CLK	=	Clock	V_{CC}	=	Supply Voltage
GND	=	Ground	TDI	=	Test Data In
I	=	Input	TCK	=	Test Clock
I/O	=	Input/Output	TMS	=	Test Mode Select
NC	=	No Connect	TDO	=	Test Data Out

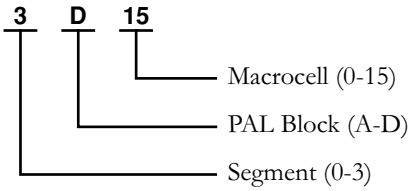

256-BALL BGA CONNECTION DIAGRAM — M5-320

Bottom View (I/O Pin-outs)

256-Ball BGA

	A	B	C	D	E	F	G	H	J	K	L	M	N	P	R	T	U	V	W	Y	
1	GND	GND	I/O181	I/O182	I/O183	GND	I/O184	GND	I/O185	I/O186	GND	I/O187	GND	I/O188	GND	I/O189	I/O190	I/O191	GND	GND	1
2	GND	I/O164	I/O165	I/O166	I/O167	I/O168	I/O169	I/O170	I/O171	I3/CLK3	I2/CLK2	I/O172	I/O173	I/O174	I/O175	I/O176	I/O177	I/O178	I/O179	I/O180	2
3	GND	I/O148	V_{CC}	I/O149	I/O150	I/O151	I/O152	I/O153	I/O154	I/O155	I/O156	I/O157	I/O158	I/O159	I/O160	I/O161	I/O162	V_{CC}	I/O163	GND	3
4	I/O134	I/O135	I/O136	V_{CC}	TDO	I/O137	V_{CC}	I/O138	I/O139	I/O140	I/O141	I/O142	I/O143	V_{CC}	I/O144	TMS	V_{CC}	I/O145	I/O146	I/O147	4
5	I/O128	I/O129	I/O130	V_{CC}													V_{CC}	I/O131	I/O132	I/O133	5
6	GND	I/O122	I/O123	I/O124													I/O125	I/O126	I/O127	GND	6
7	I/O116	I/O117	I/O118	V_{CC}													V_{CC}	I/O119	I/O120	I/O121	7
8	I/O108	I/O109	I/O110	I/O111													I/O112	I/O113	I/O114	I/O115	8
9	GND	I/O102	I/O103	I/O104													I/O105	I/O106	I/O107	GND	9
10	GND	I/O96	I/O97	I/O98													I/O99	I/O100	I/O101	GND	10
11	GND	I/O90	I/O91	I/O92													I/O93	I/O94	I/O95	GND	11
12	GND	I/O84	I/O85	I/O86													I/O87	I/O88	I/O89	GND	12
13	I/O76	I/O77	I/O78	I/O79													I/O80	I/O81	I/O82	I/O83	13
14	I/O70	I/O71	I/O72	V_{CC}													V_{CC}	I/O73	I/O74	I/O75	14
15	GND	I/O64	I/O65	I/O66													I/O67	I/O68	I/O69	GND	15
16	I/O58	I/O59	I/O60	V_{CC}													V_{CC}	I/O61	I/O62	I/O63	16
17	I/O44	I/O45	I/O46	V_{CC}	TDI	I/O47	V_{CC}	I/O48	I/O49	I/O50	I/O51	I/O52	I/O53	V_{CC}	I/O54	TCK	V_{CC}	I/O55	I/O56	I/O57	17
18	GND	I/O28	V_{CC}	I/O29	I/O30	I/O31	I/O32	I/O33	I/O34	I/O35	I/O36	I/O37	I/O38	I/O39	I/O40	I/O41	I/O42	V_{CC}	I/O43	GND	18
19	I/O11	I/O12	I/O13	I/O14	I/O15	I/O16	I/O17	I/O18	I/O19	IO/CLK0	I1/CLK1	I/O20	I/O21	I/O22	I/O23	I/O24	I/O25	I/O26	I/O27	GND	19
20	GND	GND	I/O0	I/O1	I/O2	GND	I/O3	GND	I/O4	GND	I/O5	I/O6	GND	I/O7	GND	I/O8	I/O9	I/O10	GND	GND	20

Pin Designations

CLK	=	Clock
GND	=	Ground
I	=	Input
I/O	=	Input/Output
NC	=	No Connect
V_{CC}	=	Supply Voltage
TDI	=	Test Data In
TCK	=	Test Clock
TMS	=	Test Mode Select
TDO	=	Test Data Out

20446G-026

Select devices have been discontinued.
See Ordering Information section for product status.

352-BALL BGA CONNECTION DIAGRAM — M5-512, M5LV-512

Bottom View (Macrocell Association)

352-Ball BGA

	A	B	C	D	E	F	G	H	J	K	L	M	N	P	R	T	U	V	W	Y	AA	AB	AC	AD	AE	AF	
1	NC	NC	NC	GND	NC	5A12	GND	5D15	5D11	GND	5D6	5D3	I3/CLK3	GND	4D1	4D5	4D9	GND	4D15	4A13	GND	NC	4A6	GND	NC	NC	1
2	NC	NC	NC	5A2	5A5	5A9	5A14	5A15	5D13	5D10	5D8	5D4	5D0	4D0	4D2	4D6	4D10	4D13	4A15	4A12	4A9	4A8	4A3	4A1	GND	GND	2
3	GND	GND	NC	5A1	5A4	5A7	5A8	5A10	5A13	5D14	5D9	5D5	5D1	I2/CLK2	4D4	4D7	4D11	4D14	4A14	4A10	4A7	4A5	4A2	TMS	NC	NC	3
4	NC	6A14	NC	TDO	5A0	5A3	5A6	V_{CC}	5A11	V_{CC}	5D12	5D7	5D2	V_{CC}	4D3	4D8	4D12	V_{CC}	4A11	V_{CC}	4A4	4A0	V_{CC}	3A15	3A13	3A12	4
5	GND	6A12	6A13	V_{CC}																			3A14	3A11	3A9	GND	5
6	NC	6A9	6A10	6A15																			3A10	3A8	3A7	3A5	6
7	GND	6A6	6A8	6A11																			3A6	3A4	3A3	3A0	7
8	6A1	6A4	6A5	6A7																			3A2	3A1	3B0	NC	8
9	6B1	6A0	6A2	6A3																			V_{CC}	3B1	3B2	GND	9
10	GND	6B2	6B0	V_{CC}																			3B3	3B4	3B5	3B6	10
11	6B6	6B5	6B4	6B3																			3B7	3B8	3B9	3B10	11
12	6B10	6B9	6B8	6B7																			3B11	3B12	3B13	3B14	12
13	6B14	6B13	6B12	6B11																			V_{CC}	2B15	3B15	GND	13
14	GND	7B15	6B15	V_{CC}																			2B11	2B12	2B13	2B14	14
15	7B14	7B13	7B12	7B11																			2B7	2B8	2B9	2B10	15
16	NC	7B10	7B9	7B8																			2B3	2B4	2B5	2B6	16
17	7B7	7B6	7B5	7B4																			V_{CC}	2B0	2B2	GND	17
18	GND	7B3	7B2	V_{CC}																			2A3	2A2	2A0	2B1	18
19	7B1	7B0	7A1	7A4																			2A7	2A5	2A4	2A1	19
20	7A0	7A2	7A3	7A8																			2A11	2A8	2A6	GND	20
21	7A5	7A6	7A7	7A12																			2A15	2A10	2A9	NC	21
22	GND	7A9	7A11	7A15																			V_{CC}	2A13	2A12	GND	22
23	7A10	7A13	7A14	V_{CC}	0A0	0A4	V_{CC}	0A11	V_{CC}	0D12	0D8	0D3	V_{CC}	1D2	1D7	1D12	V_{CC}	1A11	V_{CC}	1A6	1A3	1A0	TCK	NC	2A14	NC	23
24	NC	NC	TDI	0A2	0A5	0A7	0A10	0A14	0D14	0D11	0D7	0D4	I0/CLK0	1D1	1D5	1D9	1D14	1A13	1A10	1A8	1A7	1A4	1A1	NC	GND	GND	24
25	GND	GND	0A1	0A3	0A8	0A9	0A12	0A15	0D13	0D10	0D6	0D2	0D0	1D0	1D4	1D8	1D10	1D13	1A15	1A14	1A9	1A5	1A2	NC	NC	NC	25
26	NC	NC	GND	0A6	NC	GND	0A13	0D15	GND	0D9	0D5	0D1	GND	I1/CLK1	1D3	1D6	GND	1D11	1D15	GND	1A12	NC	GND	NC	NC	NC	26

20446G-031

Pin Designations

CLK	=	Clock
GND	=	Ground
I	=	Input
I/O	=	Input/Output
NC	=	No Connect
V_{CC}	=	Supply Voltage
TDI	=	Test Data In
TCK	=	Test Clock
TMS	=	Test Mode Select
TDO	=	Test Data Out

7 D 15

- 15 — Macrocell (0-15)
- D — PAL Block (A-D)
- 7 — Segment (0-7)

Select devices have been discontinued.
See Ordering Information section for product status.

3.3V M5LV ORDERING INFORMATION[1]

Lattice standard products are available in several packages and operating ranges. The order number (Valid Combination) is formed by a combination of the elements below.

M5LV- 512 /256 -7 SA C

FAMILY TYPE

M5LV- = MACH 5 Low Voltage (3.3-V V_{CC})

MACROCELL DENSITY

128 = 128 Macrocells
256 = 256 Macrocells
320 = 320 Macrocells
384 = 384 Macrocells
512 = 512 Macrocells

I/Os

/68 = 68 I/Os in 100-pin PQFP or TQFP
/74 = 74 I/Os in 100-pin TQFP
/104 = 104 I/Os in 144-pin PQFP or TQFP
/120 = 120 I/Os in 160-pin PQFP
/160 = 160 I/Os in 208-pin PQFP
/256 = 256 I/Os in 352-ball BGA

OPERATING CONDITIONS

C = Commercial (0°C to +70°C)
I = Industrial (-40°C to +85°C)

PACKAGE TYPE

Y = Plastic Quad Flat Pack (PQFP)
V = Thin Quad Flat Pack (TQFP)
SA = Ball Grid Array (BGA)

SPEED

-5 = 5.5 ns t_{PD}
-6 = 6.5 ns t_{PD}
-7 = 7.5 ns t_{PD}
-10 = 10 ns t_{PD}
-12 = 12 ns t_{PD}
-15 = 15 ns t_{PD}
-20 = 20 ns t_{PD}

Note:

1. See below for valid device/package combinations.

Valid Combinations		
M5LV-128/68	Commercial: -5, -7, -10, -12 Industrial: -7, -10, -12, -15	VC, VI
M5LV-128/74		VC, VI
M5LV-128/104		VC, VI
M5LV-128/120		YC, YI
M5LV-256/68		YC, YI
M5LV-256/74		VC, VI
M5LV-256/104		VC, VI
M5LV-256/120		YC, YI
M5LV-256/160		YC, YI

Device Marking

Actual device marking differs from the ordering part number (OPN). All MACH devices are dual-marked with both Commercial and Industrial grades. The Industrial grade is slower, i.e., M5LV-512/256-7AC-10AI.

Valid Combinations		
M5LV-320/120	Commercial: -6, -7, -10, -12, -15 Industrial: -10, -12, -15, -20	YC, YI
M5LV-320/160		YC, YI
M5LV-384/120		YC, YI
M5LV-384/160		YC, YI
M5LV-512/120		YC, YI
M5LV-512/160		YC, YI
M5LV-512/256		SAC, SAI

Valid Combinations

Valid Combinations list configurations planned to be supported in volume for this device. Consult the local Lattice sales office to confirm availability of specific valid combinations and to check on newly released combinations.

Select devices have been discontinued. See Ordering Information section for product status.