Welcome to E-XFL.COM

Understanding Embedded - CPLDs (Complex Programmable Logic Devices)

Embedded - CPLDs, or Complex Programmable Logic Devices, are highly versatile digital logic devices used in electronic systems. These programmable components are designed to perform complex logical operations and can be customized for specific applications. Unlike fixed-function ICs, CPLDs offer the flexibility to reprogram their configuration, making them an ideal choice for various embedded systems. They consist of a set of logic gates and programmable interconnects, allowing designers to implement complex logic circuits without needing custom hardware.

Applications of Embedded - CPLDs

Details	
Product Status	Obsolete
Programmable Type	In System Programmable
Delay Time tpd(1) Max	20 ns
Voltage Supply - Internal	4.5V ~ 5.5V
Number of Logic Elements/Blocks	-
Number of Macrocells	320
Number of Gates	-
Number of I/O	192
Operating Temperature	-40°C ~ 85°C (TA)
Mounting Type	Surface Mount
Package / Case	256-LBGA
Supplier Device Package	256-SBGA (27x27)
Purchase URL	https://www.e-xfl.com/product-detail/lattice-semiconductor/m5-320-192-20sai

Table 2. MACH 5 Speed Grades

Device	Speed Grade[1]						
	-5	-6	-7	-10	-12	-15	-20
M5-128[2]			C	C, I	C, I	C, I	I
M5-128/1	C		C, I	C, I	C, I	C, I	I
M5LV-128	C		C,I	C, I	C, I	I	
M5-192/1	C		C, I	C, I	C, I	C, I	I
M5-256[2]			C	C, I	C, I	C, I	I
M5-256/1	C		C, I	C, I	C, I	C, I	I
M5LV-256	C		C, I	C, I	C, I	I	
M5-320		C	C, I	C, I	C, I	C, I	I
M5LV-320		C	C, I	C, I	C, I	C, I	I
M5-384		C	C, I	C, I	C, I	C, I	I
M5LV-384		C	C, I	C, I	C, I	C, I	I
M5-512		C	C, I	C, I	C, I	C, I	I
M5LV-512		C	C, I	C, I	C, I	C, I	I

Note:

1. *C = Commercial grade, I = Industrial grade*
2. */1 version recommended for new designs*

With Lattice's unique hierarchical architecture, the MACH 5 family provides densities up to 512 macrocells to support full system logic integration. Extensive routing resources ensure pinout retention as well as high utilization. It is ideal for PAL® block device integration and a wide range of other applications including high-speed computing, low-power applications, communications, and embedded control. At each macrocell density point, Lattice offers several I/O and package options to meet a wide range of design needs (Table 3).

Table 3. MACH 5 Package and I/O Options [1]

	M5-128/1 M5LV-128		M5-192/1	M5-256/1 M5LV-256		M5-320 M5LV-320		M5-384 M5LV-384		M5-512 M5LV-512	
Supply Voltage	5	3.3	5	5	3.3	5	3.3	5	3.3	5	3.3
100-pin TQFP	68	68, 74	68	68	68*, 74						
100-pin PQFP	68	68*	68*	68*	68						
144-pin TQFP		104			104						
144-pin PQFP	104	104*	104*	104*	104*						
160-pin PQFP	120	120	120	120	120	120*	120	120*	120	120*	120
208-pin PQFP				160	160	160	160	160	160	160	160
240-pin PQFP						184*	184*	184*	184*	184*	184*
256-ball BGA						192	192*	192*	192*	192*	192*
352-ball BGA										256	256

Note:

1. *The I/O options indicated with a "*" are obsolete, please contact factory for more information.*

Advanced power management options allow designers to incrementally reduce power while maintaining the level of performance needed for today's complex designs. I/O safety features allow for mixed-voltage design,

Select devices have been discontinued.
See Ordering Information section for product status.

and both the 3.3-V and the 5-V device versions are in-system programmable through an IEEE 1149.1 Test Access Port (TAP) interface.

FUNCTIONAL DESCRIPTION

The MACH 5 architecture consists of PAL blocks connected by two levels of interconnect. The **block interconnect** provides routing among 4 PAL blocks. This grouping of PAL blocks joined by the block interconnect is called a **segment**. The second level of interconnect, the **segment interconnect**, ties all of the segments together. The only logic difference between any two MACH 5 devices is the number of segments. Therefore, once a designer is familiar with one device, consistent performance can be expected across the entire family. All devices have four clock pins available which can also be used as logic inputs.

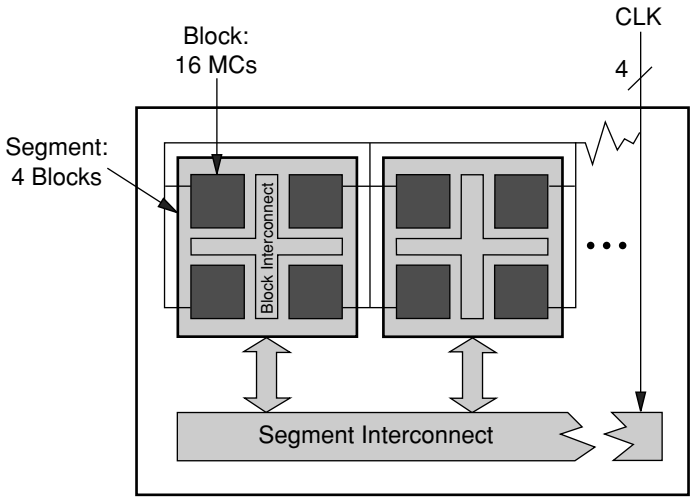

20446G-001

Figure 1. MACH 5 Block Diagram

The MACH 5 PAL blocks consist of the elements listed below (Figure 2). While each PAL block resembles an independent PAL device, it has superior control and logic generation capabilities.

- I/O cells
- Product-term array and Logic Allocator
- Macrocells
- Register control generator
- Output enable generator

I/O Cells

The I/Os associated with each PAL block have a path directly back to that PAL block called **local feedback**. If the I/O is used in another PAL block, the **interconnect feeder** assigns a **block interconnect** line to that signal. The interconnect feeder acts as an input switch matrix. The block and segment interconnects provide connections between any two signals in a device. The **block feeder** assigns block interconnect lines and local feedback lines to the PAL block inputs.

Select devices have been discontinued.
See Ordering Information section for product status.

MACH 5 TIMING MODEL

The primary focus of the MACH 5 timing model is to accurately represent the timing in a MACH 5 device, and at the same time, be easy to understand. This model accurately describes all combinatorial and registered paths through the device, making a distinction between **internal feedback** and **external feedback**. A signal uses internal feedback when it is fed back into the switch matrix or block without having to go through the output buffer. The input register specifications are also reported as internal feedback. When a signal is fed back into the switch matrix after having gone through the output buffer, it is using external feedback.

The parameter, t_{BUF}, is defined as the time it takes to go through the output buffer to the I/O pad. If a signal goes to the internal feedback rather than to the I/O pad, the parameter designator is followed by an "i". By adding t_{BUF} to this internal parameter, the external parameter is derived. For example, $t_{PD} = t_{PDi} + t_{BUF}$. A diagram representing the modularized MACH 5 timing model is shown in Figure 7. Refer to the Technical Note entitled *MACH 5 Timing and High Speed Design* for a more detailed discussion about the timing parameters.

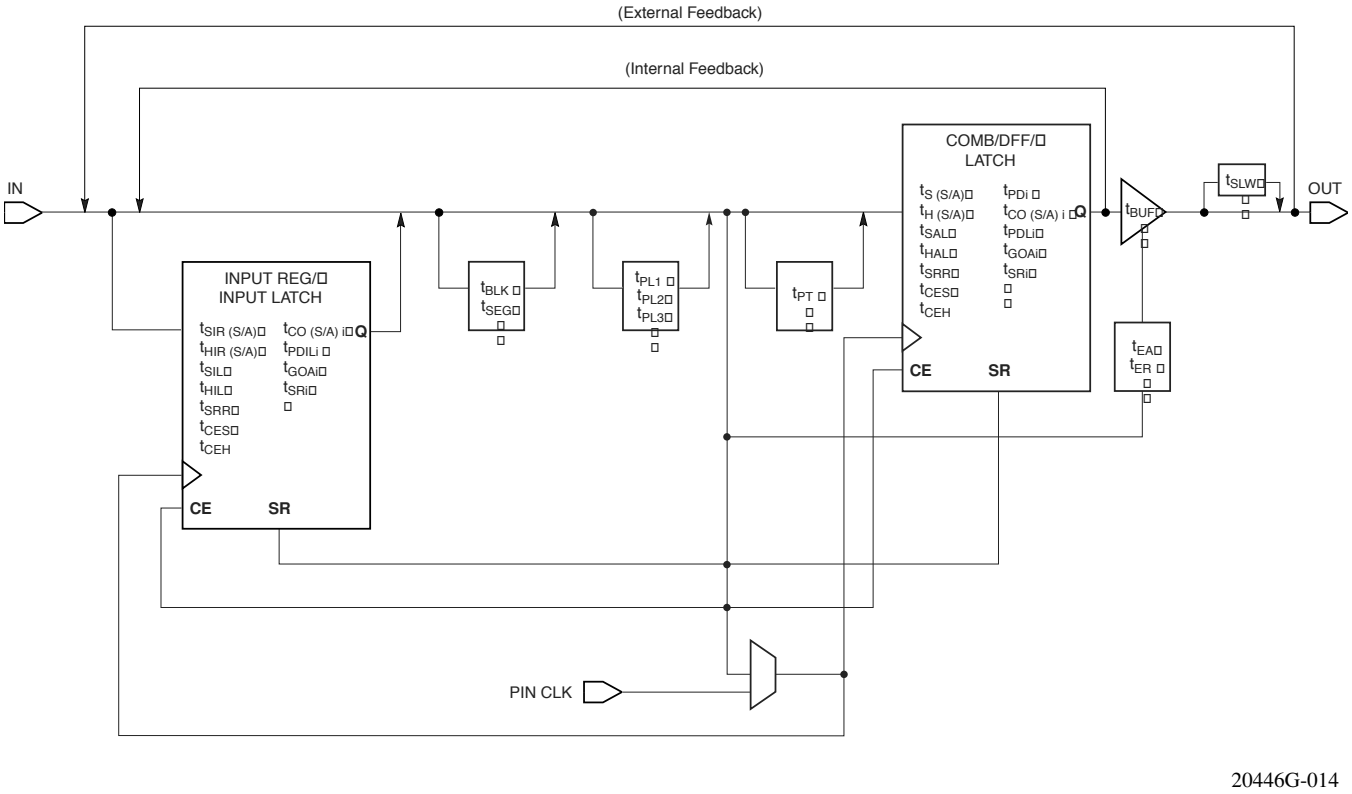

20446G-014

Figure 7. MACH 5 Timing Model

Select devices have been discontinued.
See Ordering Information section for product status.

MULTIPLE I/O AND DENSITY OPTIONS

The MACH 5 family offers six macrocell densities in a number of I/O options. This allows designers to choose a device close to their logic density and I/O requirements, thus minimizing costs. For the same package type, every density has the same pin-out. With proper design considerations, a design can be moved to a higher or lower density part as required.

IEEE 1149.1 - COMPLIANT BOUNDARY SCAN TESTABILITY

Most MACH 5 devices have boundary scan registers and are compliant to the IEEE 1149.1 standard. This allows functional testing of the circuit board on which the device is mounted through a serial scan path that can access all critical logic nodes. Internal registers are linked internally, allowing test data to be shifted in and loaded directly onto test nodes, or test node data to be captured and shifted out for verification. In addition, these devices can be linked into a board-level serial scan path for more complete board-level testing.

IEEE 1149.1 - COMPLIANT IN-SYSTEM PROGRAMMING

Programming devices in-system provides a number of significant benefits including: rapid prototyping, lower inventory levels, higher quality, and the ability to make in-field modifications. All MACH 5 devices provide in-system programming (ISP) capability through their IEEE 1149.1-compliant Boundary Scan Test Access Port. By using the IEEE 1149.1-compliant Boundary Scan Test Access Port as the communication interface through which ISP is achieved, customers get the benefit of a standard, well-defined interface.

MACH 5 devices can be programmed across the commercial temperature and voltage range. The PC-based LatticePRO software facilitates in-system programming of MACH 5 devices. LatticePRO software takes the JEDEC file output produced by design implementation software, along with information about the Boundary Scan chain, and creates a set of vectors that are used to drive the Boundary Scan chain. LatticePRO software can use these vectors to drive a Boundary Scan chain via the parallel port of a PC. Alternatively, LatticePRO software can output files in formats understood by common automated test equipment. This equipment can then be used to program MACH 5 devices during the testing of a circuit board.

PCI COMPLIANT

MACH 5 devices in the -5/-6/-7/-10/-12 speed grades are compliant with the *PCI Local Bus Specification* version 2.1, published by the PCI Special Interest Group (SIG). The 5-V devices are fully PCI-compliant. The 3.3-V devices are mostly compliant but do not meet the PCI condition to clamp the inputs as they rise above V_{CC} because of their 5-V input tolerant feature. MACH 5 devices provide the speed, drive, density, output enables and I/Os for the most complex PCI designs.

Select devices have been discontinued.
See Ordering Information section for product status.

SAFE FOR MIXED SUPPLY VOLTAGE SYSTEM DESIGNS [1]

Both the 3.3-V and 5-V V_{CC} MACH 5 devices are safe for mixed supply voltage system designs. The 5-V devices will not overdrive 3.3-V devices above the output voltage of 3.3 V, while they accept inputs from other 3.3-V devices. The 3.3-V devices will accept inputs up to 5.5 V. Both the 3.3-V and 5-V versions have the same high-speed performance and provide easy-to-use mixed-voltage design capability.

Note:

1. *Excludes original M5-128, M5-192, and M5-256 while M5-128/1, M3-192/1 and M5-256/1 are supported. Please refer to Application Note titled "Hot Socketing and Mixed Supply Design with MACH 4 and MACH 5 Devices".*

BUS-FRIENDLY INPUTS AND I/OS

All MACH 5 devices have inputs and I/Os which feature the Bus-Friendly circuitry incorporating two inverters in series which loop back to the input. This double inversion weakly holds the input at its last driven logic state. While it is a good design practice to tie unused pins to a known state, the Bus-Friendly input structure pulls pins away from the input threshold voltage where noise can cause high-frequency switching. At power-up, the Bus-Friendly latches are reset to a logic level "1." For the circuit diagram, please refer to the document entitled *MACH Endurance Characteristics* on the Lattice Data Book CD-ROM or Lattice web site.

POWER MANAGEMENT

There are 4 power/speed options in each MACH 5 PAL block (Table 5). The speed and power tradeoff can be tailored for each design. The signal speed paths in the lower-power PAL blocks will be slower than those in the higher-power PAL blocks. This feature allows speed critical paths to run at maximum frequency while the rest of the signal paths operate in a lower-power mode. In large designs, there may be several different speed requirements for different portions of the design.

Table 5. Power Levels

High Speed/High Power	100% Power
Medium High Speed/Medium High Power	67% Power
Medium Low Speed/Medium Low Power	40% Power
Low Speed/Low Power	20% Power

PROGRAMMABLE SLEW RATE

Each MACH 5 device I/O has an individually programmable output slew rate control bit. Each output can be individually configured for the higher speed transition (3 V/ns) or for the lower noise transition (1 V/ns). For high-speed designs with long, unterminated traces, the slow-slew rate will introduce fewer reflections, less noise, and keep ground bounce to a minimum. For designs with short traces or well terminated lines, the fast slew rate can be used to achieve the highest speed. The slew rate is adjusted independent of power.

POWER-UP RESET/SET

All flip-flops power up to a known state for predictable system initialization. If a macrocell is configured to SET on a signal from the control generator, then that macrocell will be SET during device power-up. If a macrocell is configured to RESET on a signal from the control generator or is not configured for set/reset, then that macrocell will RESET on power-up. To guarantee initialization values, the V_{CC} rise must be monotonic and the clock must be inactive until the reset delay time has elapsed.

Select devices have been discontinued.
See Ordering Information section for product status.

SECURITY BIT

A programmable security bit is provided on the MACH 5 devices as a deterrent to unauthorized copying of the array configuration patterns. Once programmed, this bit defeats readback of the programmed pattern by a device programmer, securing proprietary designs from competitors. Programming and verification are also defeated by the security bit. The bit can only be reset by erasing the entire device.

Select devices have been discontinued.
See Ordering Information section for product status.

MACH 5 PAL BLOCK

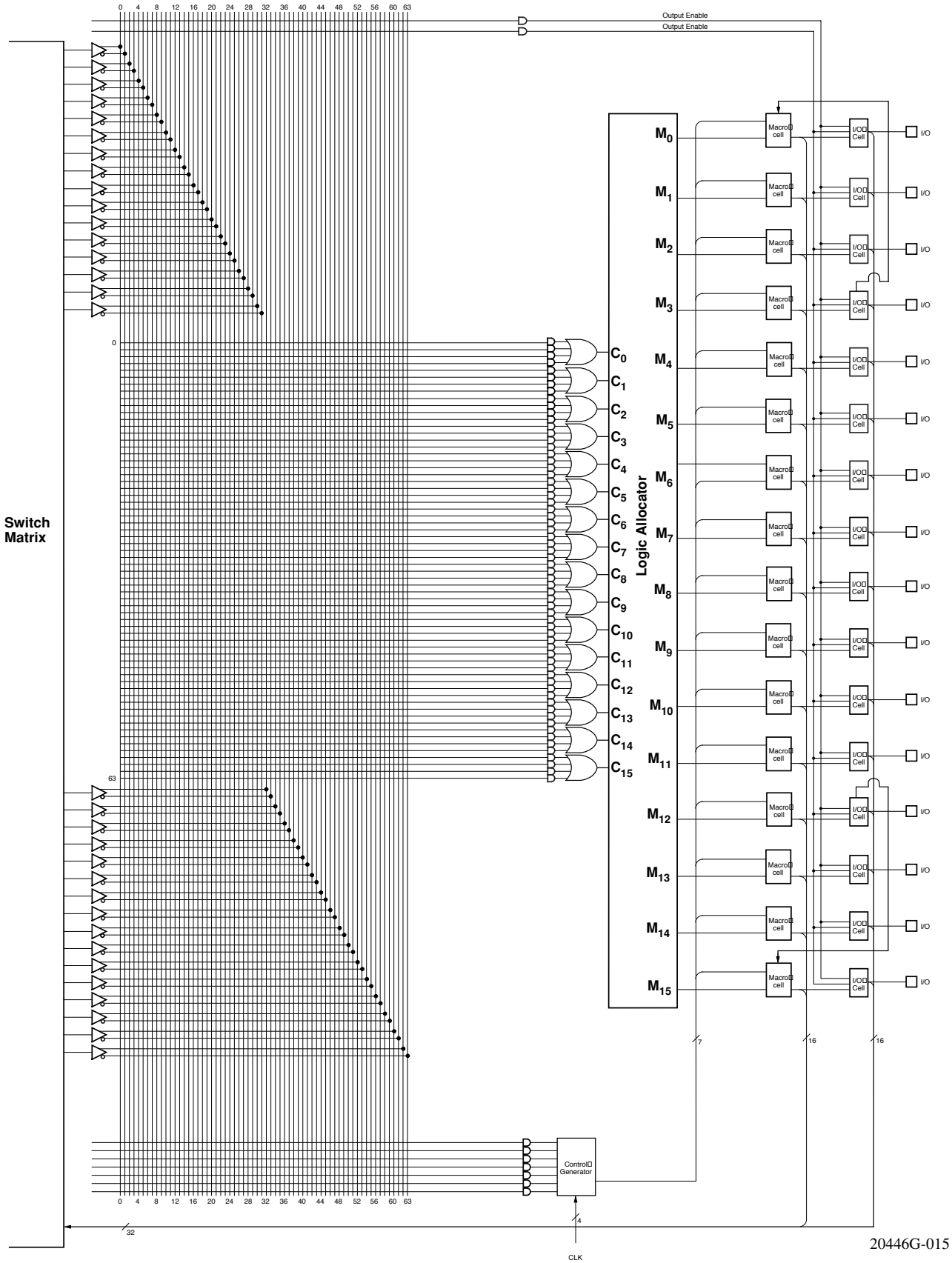

Select devices have been discontinued.
See Ordering Information section for product status.

BLOCK DIAGRAM — M5(LV)-128/XXX

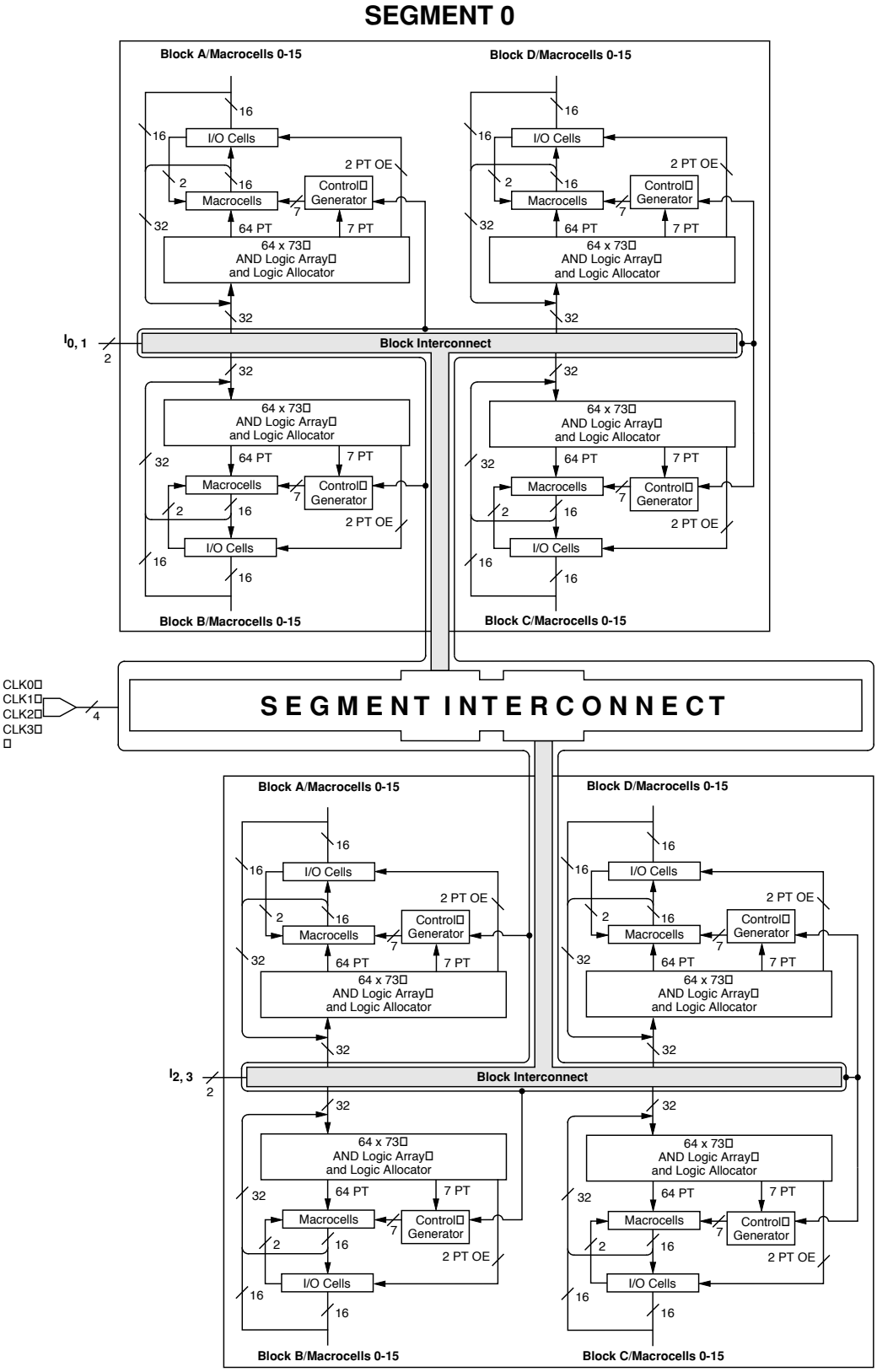

20446G-007

Select devices have been discontinued.
See Ordering Information section for product status.

BLOCK DIAGRAM — M5(LV)-320/XXX

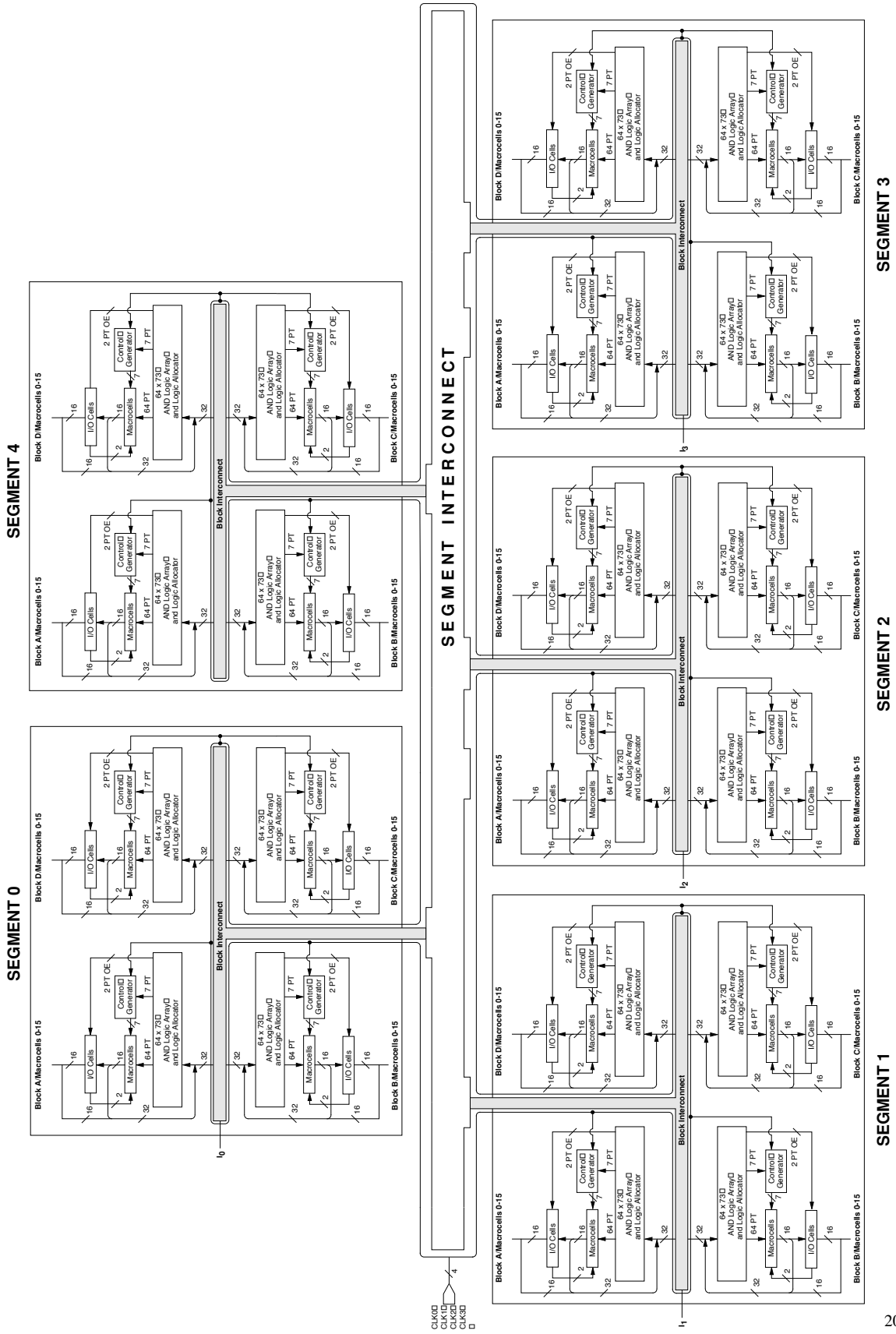

20446G-010

Select devices have been discontinued.
See Ordering Information section for product status.

BLOCK DIAGRAM — M5(LV)-512/XXX

Continued

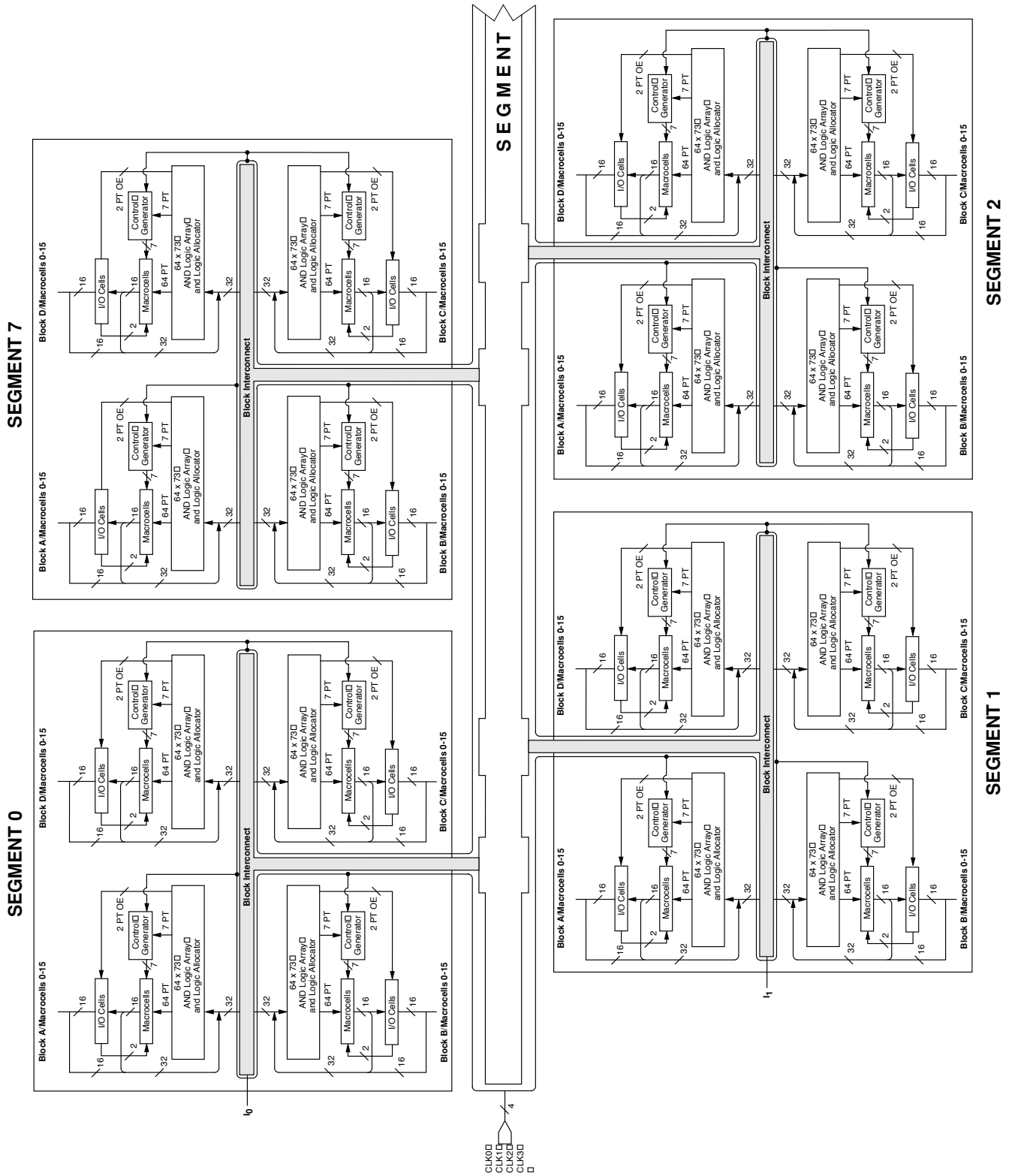

20446G-012

Select devices have been discontinued.
See Ordering Information section for product status.

ABSOLUTE MAXIMUM RATINGS

M5

Storage Temperature . . . . . -65°C to +150°C

Device Junction
Temperature (Note 1) . . . . . +130°C or +150°C

Supply Voltage
with Respect to Ground . . . . . -0.5 V to +7.0 V

DC Input Voltage . . . . . -0.5 V to 5.5 V

Static Discharge Voltage . . . . . 2000 V

Latchup Current (-40°C to +85°C) . . . . . 200 mA

Stresses above those listed under Absolute Maximum Ratings may cause permanent device failure. Functionality at or above these limits is not implied. Exposure to Absolute Maximum Ratings for extended periods may affect device reliability.

OPERATING RANGES

Commercial (C) Devices

Ambient Temperature (T_A)
Operating in Free Air . . . . . 0°C to +70°C

Supply Voltage (V_{CC})
with Respect to Ground . . . . . +4.75 V to +5.25 V

Industrial (I) Devices

Ambient Temperature (T_A)
Operating in Free Air . . . . . -40°C to +85°C

Supply Voltage (V_{CC})
with Respect to Ground . . . . . +4.5 V to +5.5 V

Operating ranges define those limits between which the functionality of the device is guaranteed.

5-V DC CHARACTERISITICS OVER OPERATING RANGES

Parameter Symbol	Parameter Description	Test Description	Min	Typ	Max	Unit
V_{OH}	Output HIGH Voltage (For M5-128/1, M5-192/1, M5-256/1, M5-320, M5-384, M5-512 Devices)	I_{OH} = -3.2 mA, V_{CC} = Min, V_{IN} = V_{IH} or V_{IL}	2.4			V
		I_{OH} = -100 µA, V_{CC} = Max, V_{IN} = V_{IH} or V_{IL}		3.3	3.6	V
	Output HIGH Voltage (For M5-128, M5-192, M5-256 Devices)	I_{OH} = -3.2 mA, V_{CC} = Min, V_{IN} = V_{IH} or V_{IL}	2.4			V
		I_{OH} = -2.5 mA, V_{CC} = 5.25 V, V_{IN} = V_{IH} or V_{IL}			3.6	V
V_{OL}	Output LOW Voltage (Note 2)	I_{OL} = +16 mA, V_{CC} = Min, V_{IN} = V_{IH} or V_{IL}			0.5	V
V_{IH}	Input HIGH Voltage	Guaranteed Input Logical HIGH Voltage for all Inputs (Note 3)	2.0			V
V_{IL}	Input LOW Voltage	Guaranteed Input Logical LOW Voltage for all Inputs (Note 3)			0.8	V
I_{IH}	Input HIGH Leakage Current	V_{IN} = 5.25, V_{CC} = Max (Note 4)			10	µA
I_{IL}	Input LOW Leakage Current	V_{IN} = 0, V_{CC} = Max (Note 4)			-10	µA
I_{OZH}	Off-State Output Leakage Current HIGH	V_{OUT} = 5.25, V_{CC} = Max, V_{IN} = V_{IH} or V_{IL} (Note 4)			10	µA
I_{OZL}	Off-State Output Leakage Current LOW	V_{OUT} = 0, V_{CC} = Max, V_{IN} = V_{IH} or V_{IL} (Note 4)			-10	µA
I_{SC}	Output Short-Circuit Current	V_{OUT} = 0.5 V_{CC} = Max, V_{IN} = V_{IH} or V_{IL} (Note 5)	-30		-180	mA

Note:

1. *150° for M5-128, M5-192 and M5-256 devices. 130° for M5-128/1, M5-192/1, M5-256/1, M5-320, M5-384 and M5-512 devices.*
2. *Total I_{OL} between ground pins should not exceed 64 mA.*
3. *These are absolute values with respect to device ground, and all overshoots due to system and/or tester noise are included.*
4. *I/O pin leakage is the worst case of I_{IL} and I_{OZL} or I_{IH} and I_{OZH}.*
5. *Not more than one output should be shorted at a time. Duration of the short-circuit should not exceed one second.*

Select devices have been discontinued.
See Ordering Information section for product status.

M5(LV) TIMING PARAMETERS OVER OPERATING RANGES[1]

		-5		-6		-7		-10		-12		-15		-20		
		Min	Max	Min	Max	Min	Max	Min	Max	Min	Max	Min	Max	Min	Max	Unit
Combinatorial Delay:																
t_{PDi}	Internal combinatorial propagation delay		3.5		4.5		5.5		8.0		10.0		13.0		18.0	ns
t_{PD}	Combinatorial propagation delay		5.5		6.5		7.5		10.0		12.0		15.0		20.0	ns
Registered Delays:																
t_{SS}	Synchronous clock setup time	3.0		3.0		4.0		5.0		6.0		8.0		10.0		ns
t_{SA}	Asynchronous clock setup time	3.0		3.0		4.0		5.0		6.0		7.0		8.0		ns
t_{HS}	Synchronous clock hold time	0.0		0.0		0.0		0.0		0.0		0.0		0.0		ns
t_{HA}	Asynchronous clock hold time	3.0		3.0		4.0		5.0		6.0		7.0		8.0		ns
t_{COSi}	Synchronous clock to internal output		2.5		3.0		4.0		5.0		6.0		8.0		10.0	ns
t_{COS}	Synchronous clock to output		4.5		5.0		6.0		7.0		8.0		10.0		12.0	ns
t_{COAi}	Asynchronous clock to internal output		6.0		6.0		8.0		10.0		13.0		15.0		18.0	ns
t_{COA}	Asynchronous clock to output		8.0		8.0		10.0		12.0		15.0		17.0		20.0	ns
Latched Delays:																
t_{SAL}	Latch setup time	3.0		4.0		4.0		5.0		6.0		7.0		8.0		ns
t_{HAL}	Latch hold time	3.0		3.0		4.0		5.0		6.0		7.0		8.0		ns
t_{PDLi}	Transparent latch internal		6.0		7.0		7.0		8.0		9.0		10.0		10.0	ns
t_{PDL}	Propagation delay through transparent latch		8.0		9.0		9.0		10.0		11.0		12.0		12.0	ns
t_{GOAi}	Gate to internal output		7.0		8.0		8.0		9.0		10.0		11.0		12.0	ns
t_{GOA}	Gate to output		9.0		10.0		10.0		11.0		12.0		13.0		14.0	ns
Input Register Delays:																
t_{SIRS}	Input register setup time using a synchronous clock	2.0		2.0		2.0		3.0		3.0		3.0		3.0		ns
t_{SIRA}	Input register setup time using an asynchronous clock	0.0		0.0		0.0		0.0		0.0		0.0		0.0		ns
t_{HIRS}	Input register hold time using a synchronous clock	3.0		3.0		3.0		4.0		4.0		4.0		4.0		ns
t_{HIRA}	Input register hold time using an asynchronous clock	6.0		6.0		6.0		7.0		7.0		7.0		7.0		ns
Input Latch Delays:																
t_{SIL}	Input latch setup time	2.0		2.0		2.0		3.0		3.0		3.0		3.0		ns
t_{HIL}	Input latch hold time	6.0		6.0		6.0		7.0		7.0		7.0		7.0		ns
t_{PDILi}	Transparent input latch		5.0		5.0		5.5		6.0		6.0		6.0		6.0	ns
Output Delays:																
t_{BUF}	Output buffer delay		2.0		2.0		2.0		2.0		2.0		2.0		2.0	ns
t_{SLW}	Slow slew rate delay		2.5		2.5		2.5		2.5		2.5		2.5		2.5	ns
t_{EA}	Output enable time		7.5		7.5		9.5		10.0		12.0		15.0		20.0	ns
t_{ER}	Output disable time		7.5		7.5		9.5		10.0		12.0		15.0		20.0	ns

Select devices have been discontinued.
See Ordering Information section for product status.

M5(LV) TIMING PARAMETERS OVER OPERATING RANGES[1] (CONTINUED)

		-5		-6		-7		-10		-12		-15		-20		
		Min	Max	Min	Max	Min	Max	Min	Max	Min	Max	Min	Max	Min	Max	Unit
Power Delays:																
t_{PL1}	Power level 1 delay (Note 2)		4.0 (5.0)		4.0		4.0 (5.0)		4.0 (5.0)		4.0 (5.0)		4.0 (5.0)		4.0 (5.0)	ns
t_{PL2}	Power level 2 delay (Note 2)		6.0 (9.0)		6.0		6.0 (9.0)		6.0 (9.0)		6.0 (9.0)		6.0 (9.0)		6.0 (9.0)	ns
t_{PL3}	Power level 3 delay (Note 2)		9.0 (17.5)		9.0		9.0 (17.5)		9.0 (17.5)		9.0 (17.5)		9.0 (17.5)		9.0 (17.5)	ns
Additional Cluster Delay:																
t_{PT}	Product term cluster delay		0.3		0.3		0.3		0.3		0.3		0.3		0.3	ns
Interconnect Delays:																
t_{BLK}	Block interconnect delay		1.5		1.5		1.5		2.0		2.0		2.0		2.0	ns
t_{SEG}	Segment interconnect delay		4.5		4.5		5.0		6.0		6.0		6.0		6.0	ns
Reset and Preset Delays:																
t_{SRi}	Asynchronous reset or preset to internal register output		6.0		8.0		8.0		10.0		12.0		14.0		16.0	ns
t_{SR}	Asynchronous reset or preset to register output		8.0		10.0		10.0		12.0		14.0		16.0		18.0	ns
t_{SRR}	Reset and set register recovery time	5.5		7.5		7.5		8.0		9.0		10.0		11.0		ns
t_{SRW}	Asynchronous reset or preset width	3.0		4.0		4.0		5.0		6.0		7.0		8.0		ns
Clock Enable Delays:																
t_{CES}	Clock enable setup time	4.0		5.0		5.0		6.0		7.0		7.0		8.0		ns
t_{CEH}	Clock enable hold time	3.0		4.0		4.0		5.0		6.0		6.0		7.0		ns
Width:																
t_{WLS}	Global clock width low (Note 3)	2.5		3.0		3.0		4.0		5.0		6.0		6.0		ns
t_{WHS}	Global clock width high (Note 3)	2.5		3.0		3.0		4.0		5.0		6.0		6.0		ns
t_{WLA}	Product term clock width low	3.0		4.0		4.0		5.0		6.0		7.0		8.0		ns
t_{WHA}	Product term clock width high	3.0		4.0		4.0		5.0		6.0		7.0		8.0		ns
t_{GWA}	Gate width low (for low transparent) or high (for high transparent)	3.0		4.0		4.0		5.0		6.0		7.0		8.0		ns
t_{WIR}	Input register clock width low or high	3.0		4.0		4.0		5.0		6.0		7.0		8.0		ns

Select devices have been discontinued.
See Ordering Information section for product status.

CAPACITANCE[1]

Parameter Symbol	Parameter Description	Test conditions		Typ	Unit
C_{IN}	I/CLK pin	V_{IN} =2.0 V	3.3 V or 5 V, 25º C, 1 MHz	12	pF
$C_{I/O}$	I/O pin	V_{OUT} =2.0 V	3.3 V or 5 V, 25º C, 1 MHz	10	pF

1. *These parameters are not 100% tested, but are calculated at initial characterization and at any time the design is modified where these parameters may be affected.*

I_{CC} vs. FREQUENCY

These curves represent the typical power consumption for a particular device at system frequency. The selected "typical" pattern is a 16-bit up-down counter. This pattern fills the device and exercises every macrocell. Maximum frequency shown uses internal feedback and a D-type register. Power/Speed are optimized to obtain the highest counter frequency and the lowest power. The highest frequency (LSBs) is placed in common PAL blocks, which are set to high power. The lowest frequency signals (MSBs) are placed in a common PAL block and set to lowest power. For a more detailed discussion about MACH 5 power consumption, refer to the application note entitled *MACH 5 Power* in the Application Notes section on the Lattice Data Book CD-ROM or Lattice web site.

I_{CC} CURVES AT HIGH /LOW POWER MODES

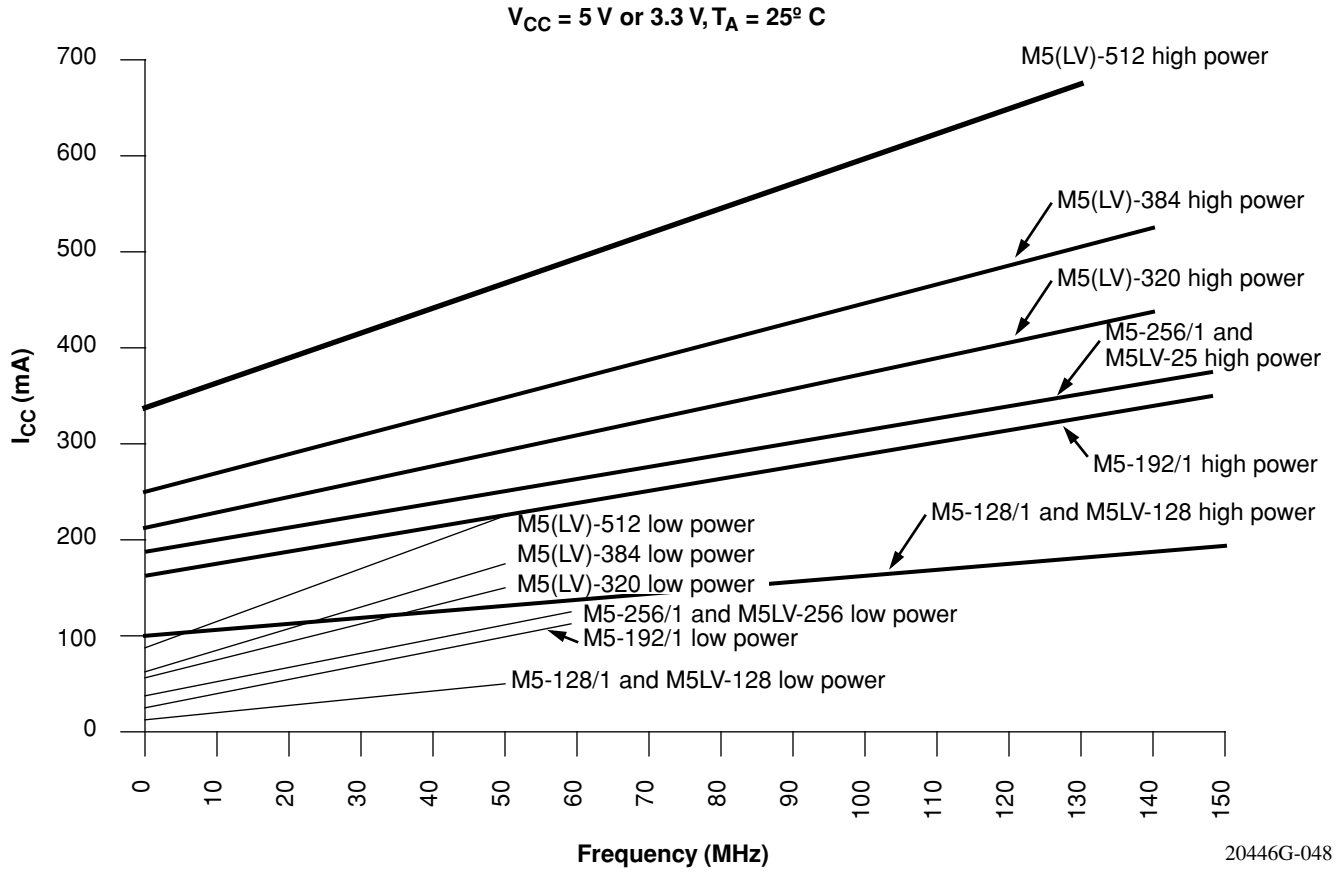

Figure 8. I_{CC} Curves at High/Low Power Modes

Select devices have been discontinued.
See Ordering Information section for product status.

144-PIN PQFP CONNECTION DIAGRAM

Top View

144-Pin PQFP

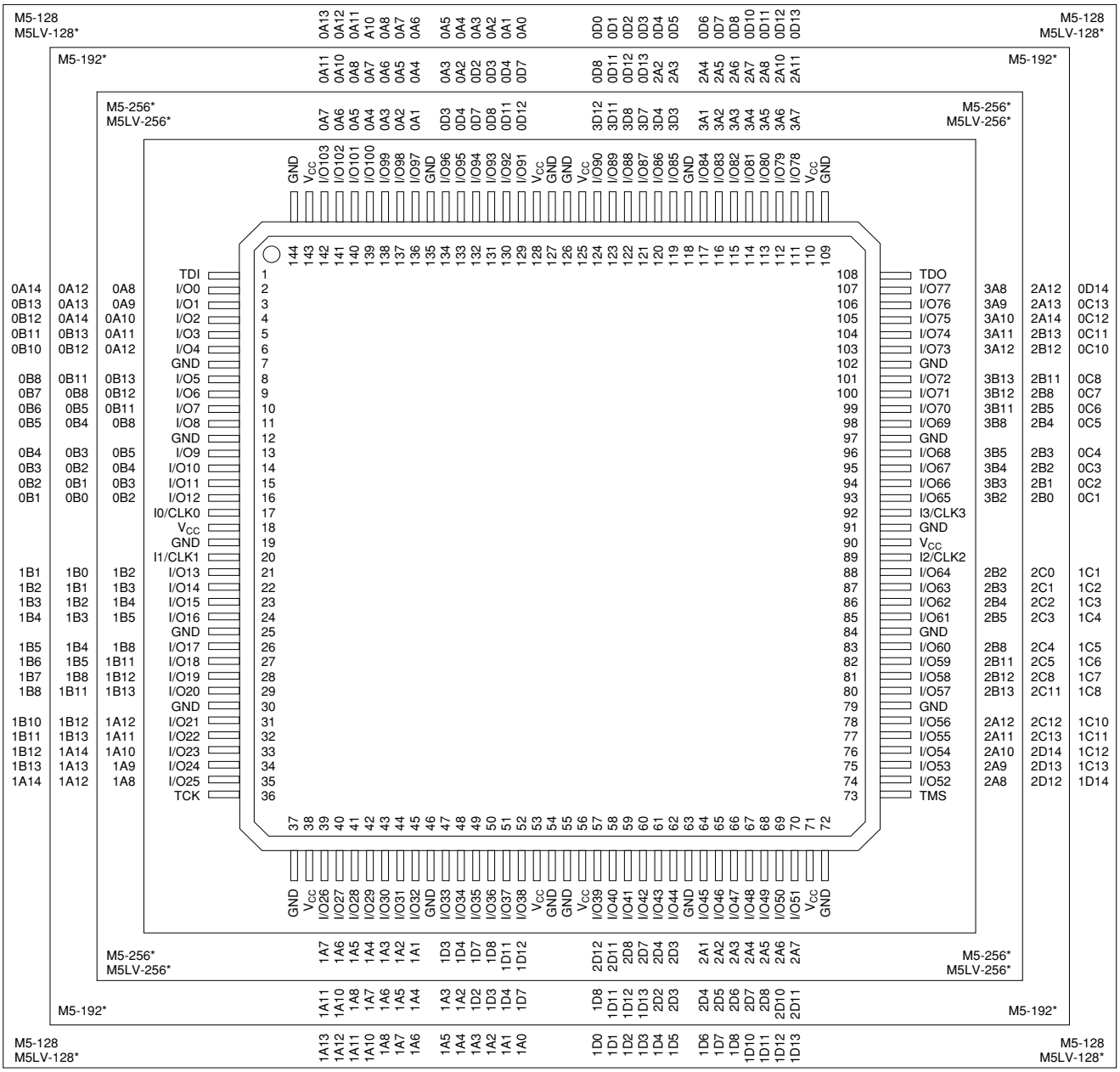

*Package obsolete, contact factory.

20446G-019

Pin Designations

CLK	=	Clock	V_{CC}	=	Supply Voltage
GND	=	Ground	TDI	=	Test Data In
I	=	Input	TCK	=	Test Clock
I/O	=	Input/Output	TMS	=	Test Mode Select
NC	=	No Connect	TDO	=	Test Data Out

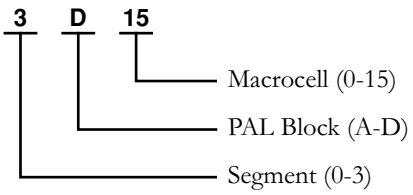

Select devices have been discontinued. See Ordering Information section for product status.

160-PIN PQFP (WITH INTERNAL HEAT SPREADER) CONNECTION DIAGRAM

Top View

160-Pin PQFP (320, 384, 512 Macrocells)

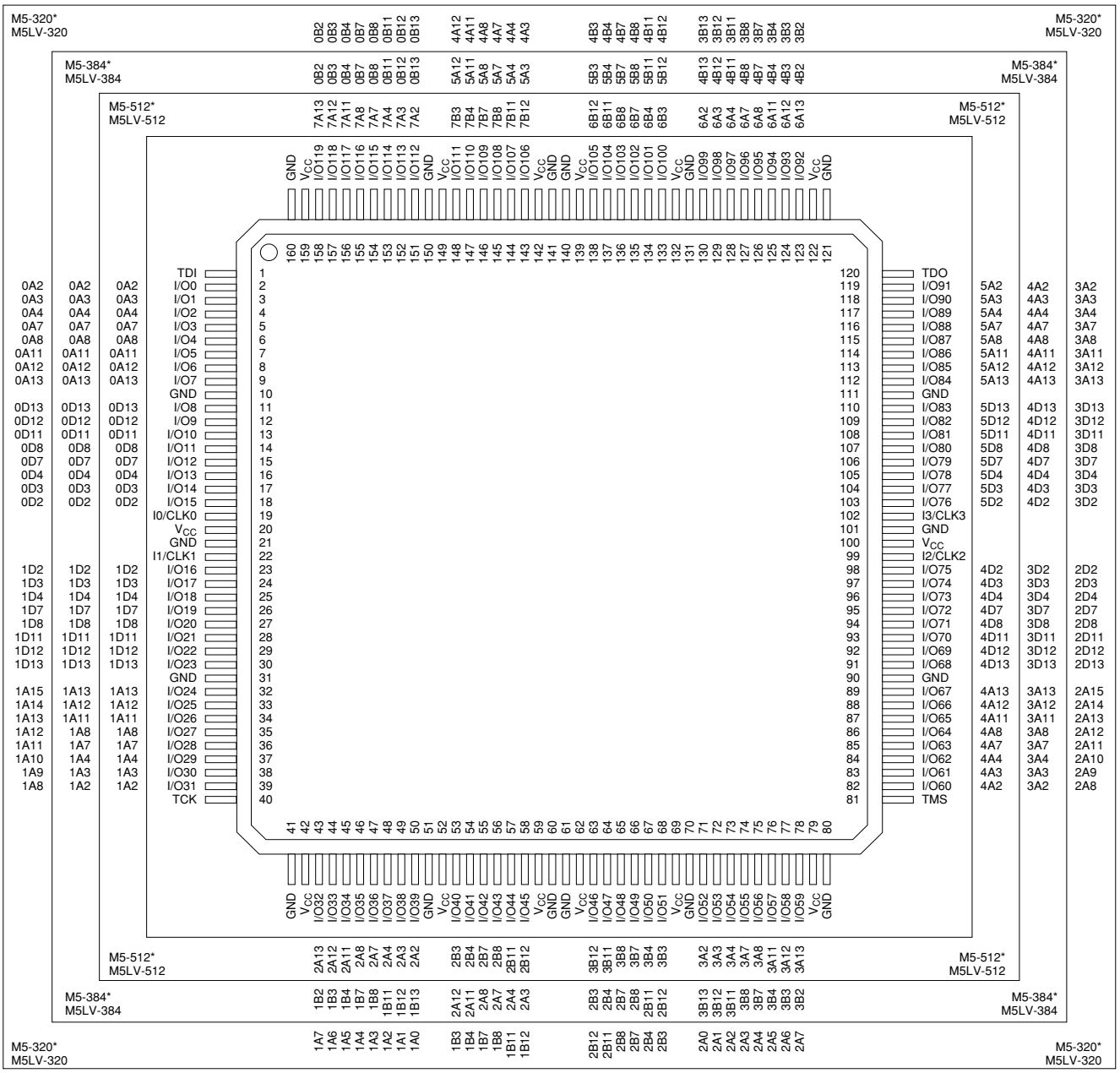

*Package obsolete, contact factory.

20446G-022

Select devices have been discontinued. See Ordering Information section for product status.

Pin Designations

CLK	=	Clock	V_{CC}	=	Supply Voltage
GND	=	Ground	TDI	=	Test Data In
I	=	Input	TCK	=	Test Clock
I/O	=	Input/Output	TMS	=	Test Mode Select
NC	=	No Connect	TDO	=	Test Data Out

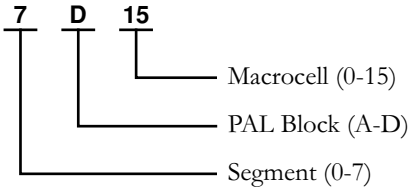

208-PIN PQFP (WITH INTERNAL HEAT SPREADER) CONNECTION DIAGRAM

Top View

208-Pin PQFP (320, 384, 512 Macrocells)

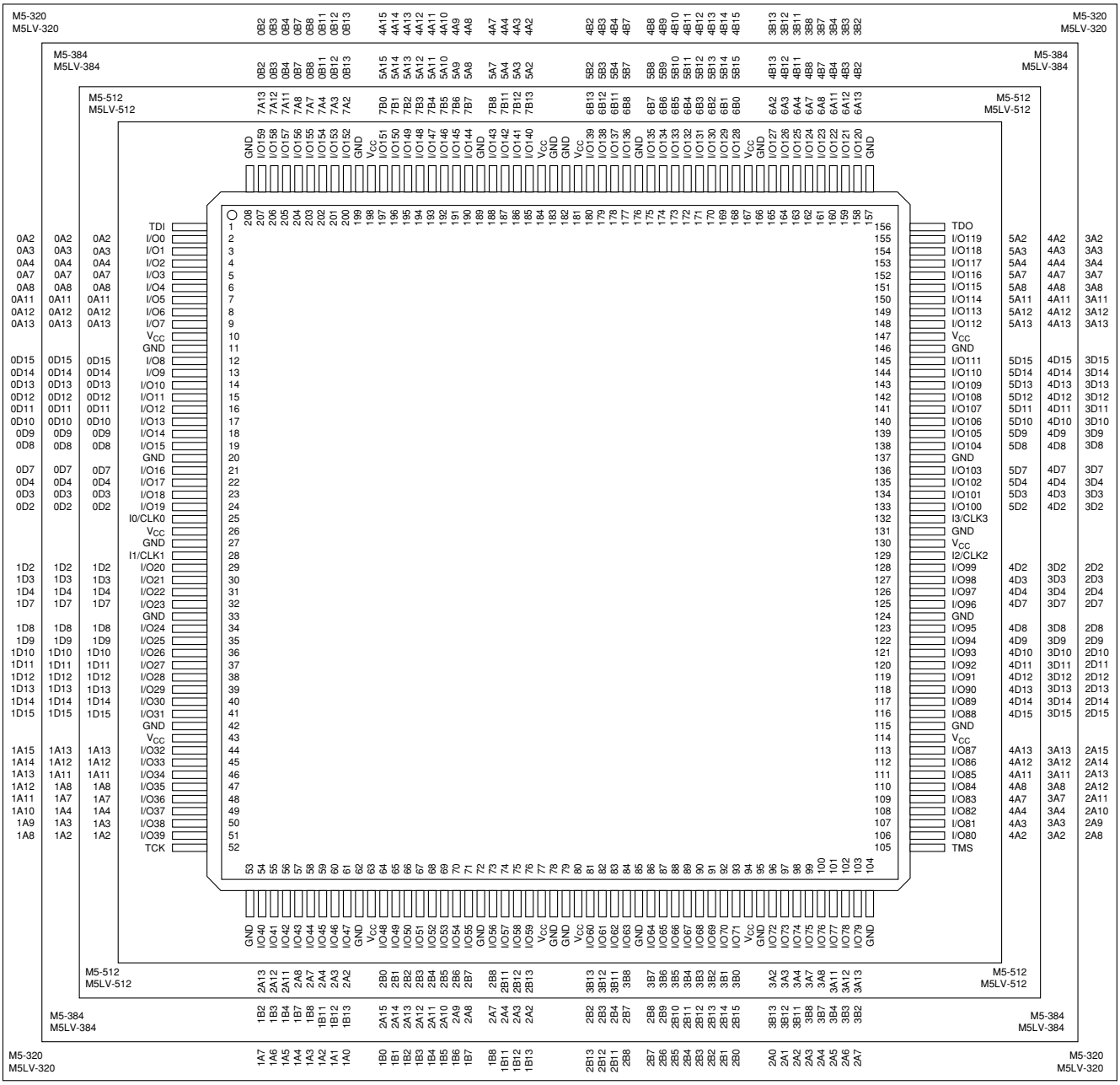

20446G-024

Pin Designations

CLK	=	Clock	V_{CC}	=	Supply Voltage
GND	=	Ground	TDI	=	Test Data In
I	=	Input	TCK	=	Test Clock
I/O	=	Input/Output	TMS	=	Test Mode Select
NC	=	No Connect	TDO	=	Test Data Out

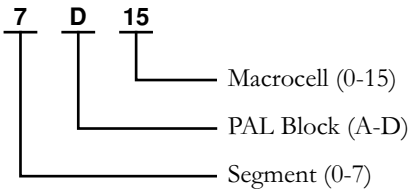

Select devices have been discontinued. See Ordering Information section for product status.

256-BALL BGA CONNECTION DIAGRAM — M5-320

Bottom View (I/O Pin-outs)

256-Ball BGA

	A	B	C	D	E	F	G	H	J	K	L	M	N	P	R	T	U	V	W	Y	
1	GND	GND	I/O181	I/O182	I/O183	GND	I/O184	GND	I/O185	I/O186	GND	I/O187	GND	I/O188	GND	I/O189	I/O190	I/O191	GND	GND	1
2	GND	I/O164	I/O165	I/O166	I/O167	I/O168	I/O169	I/O170	I/O171	I3/CLK3	I2/CLK2	I/O172	I/O173	I/O174	I/O175	I/O176	I/O177	I/O178	I/O179	I/O180	2
3	GND	I/O148	V_{CC}	I/O149	I/O150	I/O151	I/O152	I/O153	I/O154	I/O155	I/O156	I/O157	I/O158	I/O159	I/O160	I/O161	I/O162	V_{CC}	I/O163	GND	3
4	I/O134	I/O135	I/O136	V_{CC}	TDO	I/O137	V_{CC}	I/O138	I/O139	I/O140	I/O141	I/O142	I/O143	V_{CC}	I/O144	TMS	V_{CC}	I/O145	I/O146	I/O147	4
5	I/O128	I/O129	I/O130	V_{CC}													V_{CC}	I/O131	I/O132	I/O133	5
6	GND	I/O122	I/O123	I/O124													I/O125	I/O126	I/O127	GND	6
7	I/O116	I/O117	I/O118	V_{CC}													V_{CC}	I/O119	I/O120	I/O121	7
8	I/O108	I/O109	I/O110	I/O111													I/O112	I/O113	I/O114	I/O115	8
9	GND	I/O102	I/O103	I/O104													I/O105	I/O106	I/O107	GND	9
10	GND	I/O96	I/O97	I/O98													I/O99	I/O100	I/O101	GND	10
11	GND	I/O90	I/O91	I/O92													I/O93	I/O94	I/O95	GND	11
12	GND	I/O84	I/O85	I/O86													I/O87	I/O88	I/O89	GND	12
13	I/O76	I/O77	I/O78	I/O79													I/O80	I/O81	I/O82	I/O83	13
14	I/O70	I/O71	I/O72	V_{CC}													V_{CC}	I/O73	I/O74	I/O75	14
15	GND	I/O64	I/O65	I/O66													I/O67	I/O68	I/O69	GND	15
16	I/O58	I/O59	I/O60	V_{CC}													V_{CC}	I/O61	I/O62	I/O63	16
17	I/O44	I/O45	I/O46	V_{CC}	TDI	I/O47	V_{CC}	I/O48	I/O49	I/O50	I/O51	I/O52	I/O53	V_{CC}	I/O54	TCK	V_{CC}	I/O55	I/O56	I/O57	17
18	GND	I/O28	V_{CC}	I/O29	I/O30	I/O31	I/O32	I/O33	I/O34	I/O35	I/O36	I/O37	I/O38	I/O39	I/O40	I/O41	I/O42	V_{CC}	I/O43	GND	18
19	I/O11	I/O12	I/O13	I/O14	I/O15	I/O16	I/O17	I/O18	I/O19	IO/CLK0	I1/CLK1	I/O20	I/O21	I/O22	I/O23	I/O24	I/O25	I/O26	I/O27	GND	19
20	GND	GND	I/O0	I/O1	I/O2	GND	I/O3	GND	I/O4	GND	I/O5	I/O6	GND	I/O7	GND	I/O8	I/O9	I/O10	GND	GND	20

Pin Designations

CLK	=	Clock
GND	=	Ground
I	=	Input
I/O	=	Input/Output
NC	=	No Connect
V_{CC}	=	Supply Voltage
TDI	=	Test Data In
TCK	=	Test Clock
TMS	=	Test Mode Select
TDO	=	Test Data Out

20446G-026

Select devices have been discontinued.
See Ordering Information section for product status.

352-BALL BGA CONNECTION DIAGRAM — M5-512, M5LV-512

Bottom View (Macrocell Association)

352-Ball BGA

	A	B	C	D	E	F	G	H	J	K	L	M	N	P	R	T	U	V	W	Y	AA	AB	AC	AD	AE	AF	
1	NC	NC	NC	GND	NC	5A12	GND	5D15	5D11	GND	5D6	5D3	I3/CLK3	GND	4D1	4D5	4D9	GND	4D15	4A13	GND	NC	4A6	GND	NC	NC	1
2	NC	NC	NC	5A2	5A5	5A9	5A14	5A15	5D13	5D10	5D8	5D4	5D0	4D0	4D2	4D6	4D10	4D13	4A15	4A12	4A9	4A8	4A3	4A1	GND	GND	2
3	GND	GND	NC	5A1	5A4	5A7	5A8	5A10	5A13	5D14	5D9	5D5	5D1	I2/CLK2	4D4	4D7	4D11	4D14	4A14	4A10	4A7	4A5	4A2	TMS	NC	NC	3
4	NC	6A14	NC	TDO	5A0	5A3	5A6	V_{CC}	5A11	V_{CC}	5D12	5D7	5D2	V_{CC}	4D3	4D8	4D12	V_{CC}	4A11	V_{CC}	4A4	4A0	V_{CC}	3A15	3A13	3A12	4
5	GND	6A12	6A13	V_{CC}																			3A14	3A11	3A9	GND	5
6	NC	6A9	6A10	6A15																			3A10	3A8	3A7	3A5	6
7	GND	6A6	6A8	6A11																			3A6	3A4	3A3	3A0	7
8	6A1	6A4	6A5	6A7																			3A2	3A1	3B0	NC	8
9	6B1	6A0	6A2	6A3																			V_{CC}	3B1	3B2	GND	9
10	GND	6B2	6B0	V_{CC}																			3B3	3B4	3B5	3B6	10
11	6B6	6B5	6B4	6B3																			3B7	3B8	3B9	3B10	11
12	6B10	6B9	6B8	6B7																			3B11	3B12	3B13	3B14	12
13	6B14	6B13	6B12	6B11																			V_{CC}	2B15	3B15	GND	13
14	GND	7B15	6B15	V_{CC}																			2B11	2B12	2B13	2B14	14
15	7B14	7B13	7B12	7B11																			2B7	2B8	2B9	2B10	15
16	NC	7B10	7B9	7B8																			2B3	2B4	2B5	2B6	16
17	7B7	7B6	7B5	7B4																			V_{CC}	2B0	2B2	GND	17
18	GND	7B3	7B2	V_{CC}																			2A3	2A2	2A0	2B1	18
19	7B1	7B0	7A1	7A4																			2A7	2A5	2A4	2A1	19
20	7A0	7A2	7A3	7A8																			2A11	2A8	2A6	GND	20
21	7A5	7A6	7A7	7A12																			2A15	2A10	2A9	NC	21
22	GND	7A9	7A11	7A15																			V_{CC}	2A13	2A12	GND	22
23	7A10	7A13	7A14	V_{CC}	0A0	0A4	V_{CC}	0A11	V_{CC}	0D12	0D8	0D3	V_{CC}	1D2	1D7	1D12	V_{CC}	1A11	V_{CC}	1A6	1A3	1A0	TCK	NC	2A14	NC	23
24	NC	NC	TDI	0A2	0A5	0A7	0A10	0A14	0D14	0D11	0D7	0D4	I0/CLK0	1D1	1D5	1D9	1D14	1A13	1A10	1A8	1A7	1A4	1A1	NC	GND	GND	24
25	GND	GND	0A1	0A3	0A8	0A9	0A12	0A15	0D13	0D10	0D6	0D2	0D0	1D0	1D4	1D8	1D10	1D13	1A15	1A14	1A9	1A5	1A2	NC	NC	NC	25
26	NC	NC	GND	0A6	NC	GND	0A13	0D15	GND	0D9	0D5	0D1	GND	I1/CLK1	1D3	1D6	GND	1D11	1D15	GND	1A12	NC	GND	NC	NC	NC	26

20446G-031

Pin Designations

CLK	=	Clock
GND	=	Ground
I	=	Input
I/O	=	Input/Output
NC	=	No Connect
V_{CC}	=	Supply Voltage
TDI	=	Test Data In
TCK	=	Test Clock
TMS	=	Test Mode Select
TDO	=	Test Data Out

7 D 15

- 15 — Macrocell (0-15)
- D — PAL Block (A-D)
- 7 — Segment (0-7)

Select devices have been discontinued.
See Ordering Information section for product status.

5V M5 ORDERING INFORMATION[1,2]

Lattice standard products are available in several packages and operating ranges. The order number (Valid Combination) is formed by a combination of the elements below.

.

M5- 512 /256 -7 SA C

FAMILY TYPE

M5- = MACH 5 (5-V V_{CC})

MACROCELL DENSITY

128 = 128 Macrocells
192 = 192 Macrocells
256 = 256 Macrocells
320 = 320 Macrocells
384 = 384 Macrocells
512 = 512 Macrocells

I/Os

/68 = 68 I/Os in 100-pin PQFP or TQFP
/104 = 104 I/Os in 144-pin PQFP or TQFP
/120 = 120 I/Os in 160-pin PQFP
/160 = 160 I/Os in 208-pin PQFP
/192 = 192 I/Os in 256-ball BGA
/256 = 256 I/Os in 352-ball BGA

PROGRAMMING DESIGNATOR

Blank = Initial Algorithm
/1 = First Revision

OPERATING CONDITIONS

C = Commercial (0°C to +70°C)
I = Industrial (-40°C to +85°C)

PACKAGE TYPE

Y = Plastic Quad Flat Pack (PQFP)
V = Thin Quad Flat Pack (TQFP)
SA = Ball Grid Array (BGA)

SPEED

-5 = 5.5 ns t_{PD}
-6 = 6.5 ns t_{PD}
-7 = 7.5 ns t_{PD}
-10 = 10 ns t_{PD}
-12 = 12 ns t_{PD}
-15 = 15 ns t_{PD}
-20 = 20 ns t_{PD}

Note:

1. See below for valid device/package combinations.

2. M5-128/1, M5-192/1 and M5-256/1 recommended for new designs.

Valid Combinations		
M5-128/68	Commercial: -5, -7, -10, -12, -15 Industrial: -7, -10, -12, -15, -20	YC, VC, YI, VI
M5-128/104		YC[1], YI[1]
M5-128/120		YC, YI
M5-192/68		VC, VI
M5-192/120		YC, YI
M5-256/68		VC, VI
M5-256/120		YC, YI
M5-256/160		YC, YI

Device Marking

Actual device marking differs from the ordering part number (OPN). All MACH devices are dual-marked with both Commercial and Industrial grades. The Industrial grade is slower, i.e., M5-512/256-7AC-10AI.

1. M5-128/104-xxYC/1 and M5-128/104-xxYI/1 have been discontinued per PCN #06-07. Contact Rochester Electronics for available inventory.

Valid Combinations		
M5-320/160	Commercial: -6, -7, -10, -12, -15 Industrial: -7, -10, -12, -15, -20	YC, YI
M5-320/192		SAC, SAI
M5-384/160		YC, YI
M5-512/160		YC, YI
M5-512/256		SAC, SAI

Valid Combinations

Valid Combinations list configurations planned to be supported in volume for this device. Consult the local Lattice sales office to confirm availability of specific valid combinations and to check on newly released combinations.

Select devices have been discontinued. See Ordering Information section for product status.