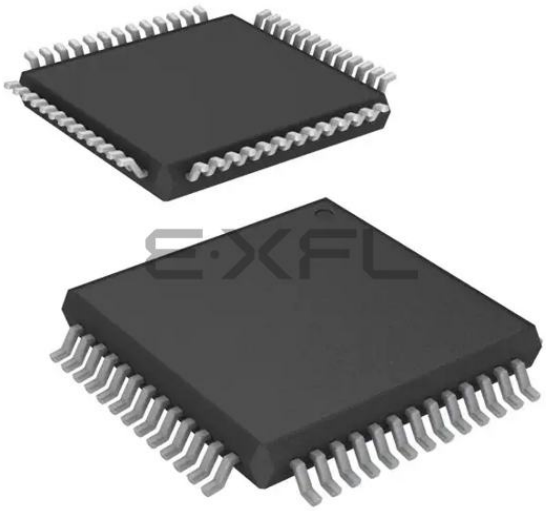

Welcome to E-XFL.COM

What is "Embedded - Microcontrollers"?

"Embedded - Microcontrollers" refer to small, integrated circuits designed to perform specific tasks within larger systems. These microcontrollers are essentially compact computers on a single chip, containing a processor core, memory, and programmable input/output peripherals. They are called "embedded" because they are embedded within electronic devices to control various functions, rather than serving as standalone computers. Microcontrollers are crucial in modern electronics, providing the intelligence and control needed for a wide range of applications.

Applications of "Embedded - Microcontrollers"

Details	
Product Status	Obsolete
Core Processor	R8C
Core Size	16-Bit
Speed	20MHz
Connectivity	I²C, LINbus, SIO, SSU, UART/USART
Peripherals	POR, PWM, Voltage Detect, WDT
Number of I/O	47
Program Memory Size	96KB (96K x 8)
Program Memory Type	FLASH
EEPROM Size	4K x 8
RAM Size	8K x 8
Voltage - Supply (Vcc/Vdd)	1.8V ~ 5.5V
Data Converters	A/D 12x10b; D/A 2x8b
Oscillator Type	Internal
Operating Temperature	-20°C ~ 85°C (TA)
Mounting Type	Surface Mount
Package / Case	52-LQFP
Supplier Device Package	52-LQFP (10x10)
Purchase URL	https://www.e-xfl.com/product-detail/renesas-electronics-america/r5f2135amnfp-v0

1.1.2 Specifications

Tables 1.1 and 1.2 outline the Specifications for R8C/35M Group.

Table 1.1 Specifications for R8C/35M Group (1)

Item	Function	Specification
CPU	Central processing unit	R8C CPU core • Number of fundamental instructions: 89 • Minimum instruction execution time: 50 ns (f(XIN) = 20 MHz, VCC = 2.7 to 5.5 V) 200 ns (f(XIN) = 5 MHz, VCC = 1.8 to 5.5 V) • Multiplier: 16 bits × 16 bits ! 32 bits • Multiply-accumulate instruction: 16 bits × 16 bits + 32 bits ! 32 bits • Operation mode: Single-chip mode (address space: 1 Mbyte)
Memory	ROM, RAM, Data flash	Refer to **Table 1.3 Product List for R8C/35M Group**.
Power Supply Voltage Detection	Voltage detection circuit	• Power-on reset • Voltage detection 3 (detection level of voltage detection 0 and voltage detection 1 selectable)
I/O Ports	Programmable I/O ports	• Input-only: 1 pin • CMOS I/O ports: 47, selectable pull-up resistor • High current drive ports: 47
Clock	Clock generation circuits	4 circuits: XIN clock oscillation circuit, XCIN clock oscillation circuit (32 kHz), High-speed on-chip oscillator (with frequency adjustment function), Low-speed on-chip oscillator • Oscillation stop detection: XIN clock oscillation stop detection function • Frequency divider circuit: Dividing selectable 1, 2, 4, 8, and 16 • Low power consumption modes: Standard operating mode (high-speed clock, low-speed clock, high-speed on-chip oscillator, low-speed on-chip oscillator), wait mode, stop mode
		Real-time clock (timer RE)
Interrupts		• Number of interrupt vectors: 69 • External Interrupt: 9 ($\overline{\text{INT}}$ × 5, Key input × 4) • Priority levels: 7 levels
Watchdog Timer		• 14 bits × 1 (with prescaler) • Reset start selectable • Low-speed on-chip oscillator for watchdog timer selectable
DTC (Data Transfer Controller)		• 1 channel • Activation sources: 33 • Transfer modes: 2 (normal mode, repeat mode)
Timer	Timer RA	8 bits × 1 (with 8-bit prescaler) Timer mode (period timer), pulse output mode (output level inverted every period), event counter mode, pulse width measurement mode, pulse period measurement mode
	Timer RB	8 bits × 1 (with 8-bit prescaler) Timer mode (period timer), programmable waveform generation mode (PWM output), programmable one-shot generation mode, programmable wait one-shot generation mode
	Timer RC	16 bits × 1 (with 4 capture/compare registers) Timer mode (input capture function, output compare function), PWM mode (output 3 pins), PWM2 mode (PWM output pin)
	Timer RD	16 bits × 2 (with 4 capture/compare registers) Timer mode (input capture function, output compare function), PWM mode (output 6 pins), reset synchronous PWM mode (output three-phase waveforms (6 pins), sawtooth wave modulation), complementary PWM mode (output three-phase waveforms (6 pins), triangular wave modulation), PWM3 mode (PWM output 2 pins with fixed period)
	Timer RE	8 bits × 1 Real-time clock mode (count seconds, minutes, hours, days of week), output compare mode

Table 1.2 Specifications for R8C/35M Group (2)

Item	Function	Specification
Serial Interface	UART0, UART1	Clock synchronous serial I/O/UART × 2 channel
	UART2	Clock synchronous serial I/O/UART, I^2C mode (I^2C-bus), multiprocessor communication function
Synchronous Serial Communication Unit (SSU)		1 (shared with I^2C-bus)
I^2C bus		1 (shared with SSU)
LIN Module		Hardware LIN: 1 (timer RA, UART0)
A/D Converter		10-bit resolution × 12 channels, includes sample and hold function, with sweep mode
D/A Converter		8-bit resolution × 2 circuits
Comparator A		• 2 circuits (shared with voltage monitor 1 and voltage monitor 2) • External reference voltage input available
Comparator B		2 circuits
Flash Memory		• Programming and erasure voltage: VCC = 2.7 to 5.5 V • Programming and erasure endurance: 10,000 times (data flash) 1,000 times (program ROM) • Program security: ROM code protect, ID code check • Debug functions: On-chip debug, on-board flash rewrite function • Background operation (BGO) function
Operating Frequency/Supply Voltage		f(XIN) = 20 MHz (VCC = 2.7 to 5.5 V) f(XIN) = 5 MHz (VCC = 1.8 to 5.5 V)
Current consumption		Typ. 6.5 mA (VCC = 5.0 V, f(XIN) = 20 MHz) Typ. 3.5 mA (VCC = 3.0 V, f(XIN) = 10 MHz) Typ. 3.5 µA (VCC = 3.0 V, wait mode (f(XCIN) = 32 kHz)) Typ. 2.0 µA (VCC = 3.0 V, stop mode)
Operating Ambient Temperature		-20 to 85#C (N version) -40 to 85#C (D version) (1)
Package		52-pin LQFP Package code: PLQP0052JA-A (previous code: 52P6A-A)

Note:
1. Specify the D version if D version functions are to be used.

Table 1.7 Pin Functions (2)

Item	Pin Name	I/O Type	Description
Reference voltage input	VREF	I	Reference voltage input pin to A/D converter and D/A converter
A/D converter	AN0 to AN11	I	Analog input pins to A/D converter
	$\overline{\text{ADTRG}}$	I	A/D external trigger input pin
D/A converter	DA0, DA1	O	D/A converter output pins
Comparator A	LVCMP1, LVCMP2	I	Comparator A analog voltage input pins
	LVREF	I	Comparator A reference voltage input pin
	LVCOUT1, LVCOUT2	O	Comparator A output pins
Comparator B	IVCMP1, IVCMP3	I	Comparator B analog voltage input pins
	IVREF1, IVREF3	I	Comparator B reference voltage input pins
I/O port	P0_0 to P0_7, P1_0 to P1_7, P2_0 to P2_7, P3_0 to P3_7, P4_3 to P4_7, P5_6, P5_7, P6_0 to P6_7	I/O	CMOS I/O ports. Each port has an I/O select direction register, allowing each pin in the port to be directed for input or output individually. Any port set to input can be set to use a pull-up resistor or not by a program. All ports can be used as LED drive ports.
Input port	P4_2	I	Input-only port

I: Input O: Output I/O: Input and output

Table 4.4 SFR Information (4) (1)

Address	Register	Symbol	After Reset
00C0h	A/D Register 0	AD0	XXh
00C1h			000000XXb
00C2h	A/D Register 1	AD1	XXh
00C3h			000000XXb
00C4h	A/D Register 2	AD2	XXh
00C5h			000000XXb
00C6h	A/D Register 3	AD3	XXh
00C7h			000000XXb
00C8h	A/D Register 4	AD4	XXh
00C9h			000000XXb
00CAh	A/D Register 5	AD5	XXh
00CBh			000000XXb
00CCh	A/D Register 6	AD6	XXh
00CDh			000000XXb
00CEh	A/D Register 7	AD7	XXh
00CFh			000000XXb
00D0h			
00D1h			
00D2h			
00D3h			
00D4h	A/D Mode Register	ADMOD	00h
00D5h	A/D Input Select Register	ADINSEL	11000000b
00D6h	A/D Control Register 0	ADCON0	00h
00D7h	A/D Control Register 1	ADCON1	00h
00D8h	D/A0 Register	DA0	00h
00D9h	D/A1 Register	DA1	00h
00DAh			
00DBh			
00DCh	D/A Control Register	DACON	00h
00DDh			
00DEh			
00DFh			
00E0h	Port P0 Register	P0	XXh
00E1h	Port P1 Register	P1	XXh
00E2h	Port P0 Direction Register	PD0	00h
00E3h	Port P1 Direction Register	PD1	00h
00E4h	Port P2 Register	P2	XXh
00E5h	Port P3 Register	P3	XXh
00E6h	Port P2 Direction Register	PD2	00h
00E7h	Port P3 Direction Register	PD3	00h
00E8h	Port P4 Register	P4	XXh
00E9h	Port P5 Register	P5	XXh
00EAh	Port P4 Direction Register	PD4	00h
00EBh	Port P5 Direction Register	PD5	00h
00ECh	Port P6 Register	P6	XXh
00EDh			
00EEh	Port P6 Direction Register	PD6	00h
00EFh			
00F0h			
00F1h			
00F2h			
00F3h			
00F4h			
00F5h			
00F6h			
00F7h			
00F8h			
00F9h			
00FAh			
00FBh			
00FCh			
00FDh			
00FEh			
00FFh			

X: Undefined
Note:
1. The blank areas are reserved and cannot be accessed by users.

Table 4.5 SFR Information (5) (1)

Address	Register	Symbol	After Reset
0100h	Timer RA Control Register	TRACR	00h
0101h	Timer RA I/O Control Register	TRAIOC	00h
0102h	Timer RA Mode Register	TRAMR	00h
0103h	Timer RA Prescaler Register	TRAPRE	FFh
0104h	Timer RA Register	TRA	FFh
0105h	LIN Control Register 2	LINCR2	00h
0106h	LIN Control Register	LINCR	00h
0107h	LIN Status Register	LINST	00h
0108h	Timer RB Control Register	TRBCR	00h
0109h	Timer RB One-Shot Control Register	TRBOCR	00h
010Ah	Timer RB I/O Control Register	TRBIOC	00h
010Bh	Timer RB Mode Register	TRBMR	00h
010Ch	Timer RB Prescaler Register	TRBPRE	FFh
010Dh	Timer RB Secondary Register	TRBSC	FFh
010Eh	Timer RB Primary Register	TRBPR	FFh
010Fh			
0110h			
0111h			
0112h			
0113h			
0114h			
0115h			
0116h			
0117h			
0118h	Timer RE Second Data Register / Counter Data Register	TRESEC	00h
0119h	Timer RE Minute Data Register / Compare Data Register	TREMIN	00h
011Ah	Timer RE Hour Data Register	TREHR	00h
011Bh	Timer RE Day of Week Data Register	TREWK	00h
011Ch	Timer RE Control Register 1	TRECR1	00h
011Dh	Timer RE Control Register 2	TRECR2	00h
011Eh	Timer RE Count Source Select Register	TRECSR	00001000b
011Fh			
0120h	Timer RC Mode Register	TRCMR	01001000b
0121h	Timer RC Control Register 1	TRCCR1	00h
0122h	Timer RC Interrupt Enable Register	TRCIER	01110000b
0123h	Timer RC Status Register	TRCSR	01110000b
0124h	Timer RC I/O Control Register 0	TRCIOR0	10001000b
0125h	Timer RC I/O Control Register 1	TRCIOR1	10001000b
0126h	Timer RC Counter	TRC	00h
0127h			00h
0128h	Timer RC General Register A	TRCGRA	FFh
0129h			FFh
012Ah	Timer RC General Register B	TRCGRB	FFh
012Bh			FFh
012Ch	Timer RC General Register C	TRCGRC	FFh
012Dh			FFh
012Eh	Timer RC General Register D	TRCGRD	FFh
012Fh			FFh
0130h	Timer RC Control Register 2	TRCCR2	00011000b
0131h	Timer RC Digital Filter Function Select Register	TRCDF	00h
0132h	Timer RC Output Master Enable Register	TRCOER	01111111b
0133h	Timer RC Trigger Control Register	TRCADCR	00h
0134h			
0135h	Timer RD Control Expansion Register	TRDECR	00h
0136h	Timer RD Trigger Control Register	TRDADCR	00h
0137h	Timer RD Start Register	TRDSTR	11111100b
0138h	Timer RD Mode Register	TRDMR	00001110b
0139h	Timer RD PWM Mode Register	TRDPMR	10001000b
013Ah	Timer RD Function Control Register	TRDFCR	10000000b
013Bh	Timer RD Output Master Enable Register 1	TRDOER1	FFh
013Ch	Timer RD Output Master Enable Register 2	TRDOER2	01111111b
013Dh	Timer RD Output Control Register	TRDOCR	00h
013Eh	Timer RD Digital Filter Function Select Register 0	TRDDF0	00h
013Fh	Timer RD Digital Filter Function Select Register 1	TRDDF1	00h

Note:
1. The blank areas are reserved and cannot be accessed by users.

Table 4.6 SFR Information (6) (1)

Address	Register	Symbol	After Reset
0140h	Timer RD Control Register 0	TRDCR0	00h
0141h	Timer RD I/O Control Register A0	TRDIORA0	10001000b
0142h	Timer RD I/O Control Register C0	TRDIORC0	10001000b
0143h	Timer RD Status Register 0	TRDSR0	11100000b
0144h	Timer RD Interrupt Enable Register 0	TRDIER0	11100000b
0145h	Timer RD PWM Mode Output Level Control Register 0	TRDPOCR0	11111000b
0146h	Timer RD Counter 0	TRD0	00h
0147h			00h
0148h	Timer RD General Register A0	TRDGRA0	FFh
0149h			FFh
014Ah	Timer RD General Register B0	TRDGRB0	FFh
014Bh			FFh
014Ch	Timer RD General Register C0	TRDGRC0	FFh
014Dh			FFh
014Eh	Timer RD General Register D0	TRDGRD0	FFh
014Fh			FFh
0150h	Timer RD Control Register 1	TRDCR1	00h
0151h	Timer RD I/O Control Register A1	TRDIORA1	10001000b
0152h	Timer RD I/O Control Register C1	TRDIORC1	10001000b
0153h	Timer RD Status Register 1	TRDSR1	11000000b
0154h	Timer RD Interrupt Enable Register 1	TRDIER1	11100000b
0155h	Timer RD PWM Mode Output Level Control Register 1	TRDPOCR1	11111000b
0156h	Timer RD Counter 1	TRD1	00h
0157h			00h
0158h	Timer RD General Register A1	TRDGRA1	FFh
0159h			FFh
015Ah	Timer RD General Register B1	TRDGRB1	FFh
015Bh			FFh
015Ch	Timer RD General Register C1	TRDGRC1	FFh
015Dh			FFh
015Eh	Timer RD General Register D1	TRDGRD1	FFh
015Fh			FFh
0160h	UART1 Transmit/Receive Mode Register	U1MR	00h
0161h	UART1 Bit Rate Register	U1BRG	XXh
0162h	UART1 Transmit Buffer Register	U1TB	XXh
0163h			XXh
0164h	UART1 Transmit/Receive Control Register 0	U1C0	00001000b
0165h	UART1 Transmit/Receive Control Register 1	U1C1	00000010b
0166h	UART1 Receive Buffer Register	U1RB	XXh
0167h			XXh
0168h			
0169h			
016Ah			
016Bh			
016Ch			
016Dh			
016Eh			
016Fh			
0170h			
0171h			
0172h			
0173h			
0174h			
0175h			
0176h			
0177h			
0178h			
0179h			
017Ah			
017Bh			
017Ch			
017Dh			
017Eh			
017Fh			

X: Undefined
Note:
1. The blank areas are reserved and cannot be accessed by users.

Table 4.8 SFR Information (8) (1)

Address	Register	Symbol	After Reset
01C0h	Address Match Interrupt Register 0	RMAD0	XXh
01C1h			XXh
01C2h			0000XXXXb
01C3h	Address Match Interrupt Enable Register 0	AIER0	00h
01C4h	Address Match Interrupt Register 1	RMAD1	XXh
01C5h			XXh
01C6h			0000XXXXb
01C7h	Address Match Interrupt Enable Register 1	AIER1	00h
01C8h			
01C9h			
01CAh			
01CBh			
01CCh			
01CDh			
01CEh			
01CFh			
01D0h			
01D1h			
01D2h			
01D3h			
01D4h			
01D5h			
01D6h			
01D7h			
01D8h			
01D9h			
01DAh			
01DBh			
01DCh			
01DDh			
01DEh			
01DFh			
01E0h	Pull-Up Control Register 0	PUR0	00h
01E1h	Pull-Up Control Register 1	PUR1	00h
01E2h			
01E3h			
01E4h			
01E5h			
01E6h			
01E7h			
01E8h			
01E9h			
01EAh			
01EBh			
01ECh			
01EDh			
01EEh			
01EFh			
01F0h	Port P1 Drive Capacity Control Register	P1DRR	00h
01F1h	Port P2 Drive Capacity Control Register	P2DRR	00h
01F2h	Drive Capacity Control Register 0	DRR0	00h
01F3h	Drive Capacity Control Register 1	DRR1	00h
01F4h			
01F5h	Input Threshold Control Register 0	VLT0	00h
01F6h	Input Threshold Control Register 1	VLT1	00h
01F7h			
01F8h	Comparator B Control Register 0	INTCMP	00h
01F9h			
01FAh	External Input Enable Register 0	INTEN	00h
01FBh	External Input Enable Register 1	INTEN1	00h
01FCh	INT Input Filter Select Register 0	INTF	00h
01FDh	INT Input Filter Select Register 1	INTF1	00h
01FEh	Key Input Enable Register 0	KIEN	00h
01FFh			

X: Undefined
Note:
1. The blank areas are reserved and cannot be accessed by users.

Table 4.9 SFR Information (9) (1)

Address	Register	Symbol	After Reset
2C00h	DTC Transfer Vector Area		XXh
2C01h	DTC Transfer Vector Area		XXh
2C02h	DTC Transfer Vector Area		XXh
2C03h	DTC Transfer Vector Area		XXh
2C04h	DTC Transfer Vector Area		XXh
2C05h	DTC Transfer Vector Area		XXh
2C06h	DTC Transfer Vector Area		XXh
2C07h	DTC Transfer Vector Area		XXh
2C08h	DTC Transfer Vector Area		XXh
2C09h	DTC Transfer Vector Area		XXh
2C0Ah	DTC Transfer Vector Area		XXh
:	DTC Transfer Vector Area		XXh
:	DTC Transfer Vector Area		XXh
2C3Ah	DTC Transfer Vector Area		XXh
2C3Bh	DTC Transfer Vector Area		XXh
2C3Ch	DTC Transfer Vector Area		XXh
2C3Dh	DTC Transfer Vector Area		XXh
2C3Eh	DTC Transfer Vector Area		XXh
2C3Fh	DTC Transfer Vector Area		XXh
2C40h	DTC Control Data 0	DTCD0	XXh
2C41h			XXh
2C42h			XXh
2C43h			XXh
2C44h			XXh
2C45h			XXh
2C46h			XXh
2C47h			XXh
2C48h	DTC Control Data 1	DTCD1	XXh
2C49h			XXh
2C4Ah			XXh
2C4Bh			XXh
2C4Ch			XXh
2C4Dh			XXh
2C4Eh			XXh
2C4Fh			XXh
2C50h	DTC Control Data 2	DTCD2	XXh
2C51h			XXh
2C52h			XXh
2C53h			XXh
2C54h			XXh
2C55h			XXh
2C56h			XXh
2C57h			XXh
2C58h	DTC Control Data 3	DTCD3	XXh
2C59h			XXh
2C5Ah			XXh
2C5Bh			XXh
2C5Ch			XXh
2C5Dh			XXh
2C5Eh			XXh
2C5Fh			XXh
2C60h	DTC Control Data 4	DTCD4	XXh
2C61h			XXh
2C62h			XXh
2C63h			XXh
2C64h			XXh
2C65h			XXh
2C66h			XXh
2C67h			XXh
2C68h	DTC Control Data 5	DTCD5	XXh
2C69h			XXh
2C6Ah			XXh
2C6Bh			XXh
2C6Ch			XXh
2C6Dh			XXh
2C6Eh			XXh
2C6Fh			XXh

X: Undefined
Note:
1. The blank areas are reserved and cannot be accessed by users.

Table 4.10 SFR Information (10) (1)

Address	Register	Symbol	After Reset
2C70h	DTC Control Data 6	DTCD6	XXh
2C71h			XXh
2C72h			XXh
2C73h			XXh
2C74h			XXh
2C75h			XXh
2C76h			XXh
2C77h			XXh
2C78h	DTC Control Data 7	DTCD7	XXh
2C79h			XXh
2C7Ah			XXh
2C7Bh			XXh
2C7Ch			XXh
2C7Dh			XXh
2C7Eh			XXh
2C7Fh			XXh
2C80h	DTC Control Data 8	DTCD8	XXh
2C81h			XXh
2C82h			XXh
2C83h			XXh
2C84h			XXh
2C85h			XXh
2C86h			XXh
2C87h			XXh
2C88h	DTC Control Data 9	DTCD9	XXh
2C89h			XXh
2C8Ah			XXh
2C8Bh			XXh
2C8Ch			XXh
2C8Dh			XXh
2C8Eh			XXh
2C8Fh			XXh
2C90h	DTC Control Data 10	DTCD10	XXh
2C91h			XXh
2C92h			XXh
2C93h			XXh
2C94h			XXh
2C95h			XXh
2C96h			XXh
2C97h			XXh
2C98h	DTC Control Data 11	DTCD11	XXh
2C99h			XXh
2C9Ah			XXh
2C9Bh			XXh
2C9Ch			XXh
2C9Dh			XXh
2C9Eh			XXh
2C9Fh			XXh
2CA0h	DTC Control Data 12	DTCD12	XXh
2CA1h			XXh
2CA2h			XXh
2CA3h			XXh
2CA4h			XXh
2CA5h			XXh
2CA6h			XXh
2CA7h			XXh
2CA8h	DTC Control Data 13	DTCD13	XXh
2CA9h			XXh
2CAAh			XXh
2CABh			XXh
2CACh			XXh
2CADh			XXh
2CAEh			XXh
2CAFh			XXh

X: Undefined
Note:
1. The blank areas are reserved and cannot be accessed by users.

Table 5.13 High-speed On-Chip Oscillator Circuit Electrical Characteristics

Symbol	Parameter	Condition	Standard			Unit
			Min.	Typ.	Max.	
&	High-speed on-chip oscillator frequency after reset	V_{CC} = 1.8 V to 5.5 V &20#C ≤ T_{opr} ≤ 85#C	39.4	40	40.6	MHz
		V_{CC} = 1.8 V to 5.5 V &40#C ≤ T_{opr} ≤ 85#C	39.4	40	40.6	MHz
		V_{CC} = 1.8 V to 5.5 V T_{opr} = 25#C	39.6	40	40.4	MHz
	High-speed on-chip oscillator frequency when the FRA4 register correction value is written into the FRA1 register and the FRA5 register correction value into the FRA3 register (2)	V_{CC} = 1.8 V to 5.5 V &20#C ≤ T_{opr} ≤ 85#C	36.311	36.864	37.417	MHz
		V_{CC} = 1.8 V to 5.5 V &40#C ≤ T_{opr} ≤ 85#C	36.311	36.864	37.417	MHz
		V_{CC} = 1.8 V to 5.5 V T_{opr} = 25#C	36.495	36.864	37.233	MHz
	High-speed on-chip oscillator frequency when the FRA6 register correction value is written into the FRA1 register and the FRA7 register correction value into the FRA3 register	V_{CC} = 1.8 V to 5.5 V &20#C ≤ T_{opr} ≤ 85#C	31.52	32	32.48	MHz
		V_{CC} = 1.8 V to 5.5 V &40#C ≤ T_{opr} ≤ 85#C	31.52	32	32.48	MHz
		V_{CC} = 1.8 V to 5.5 V T_{opr} = 25#C	31.68	32	32.32	MHz
&	Oscillation stability time	V_{CC} = 5.0 V, T_{opr} = 25#C	&	100	450	µs
&	Self power consumption at oscillation	V_{CC} = 5.0 V, T_{opr} = 25#C	&	500	&	µA

Notes:
1. V_{CC} = 1.8 to 5.5 V, T_{opr} = &20 to 85#C (N version) / &40 to 85#C (D version), unless otherwise specified.
2. This enables the setting errors of bit rates such as 9600 bps and 38400 bps to be 0% when the serial interface is used in UART mode.

Table 5.14 Low-speed On-Chip Oscillator Circuit Electrical Characteristics

Symbol	Parameter	Condition	Standard			Unit
			Min.	Typ.	Max.	
fOCO-S	Low-speed on-chip oscillator frequency		60	125	250	kHz
&	Oscillation stability time	V_{CC} = 5.0 V, T_{opr} = 25#C	&	30	100	µs
&	Self power consumption at oscillation	V_{CC} = 5.0 V, T_{opr} = 25#C	&	2	&	µA
fOCO-WDT	Low-speed on-chip oscillator frequency for the watchdog timer		60	125	250	kHz
&	Oscillation stability time	V_{CC} = 5.0 V, T_{opr} = 25#C	&	30	100	µs
&	Self power consumption at oscillation	V_{CC} = 5.0 V, T_{opr} = 25#C	&	2	&	µA

Note:
1. V_{CC} = 1.8 to 5.5 V, T_{opr} = &20 to 85#C (N version) / &40 to 85#C (D version), unless otherwise specified.

Table 5.15 Power Supply Circuit Timing Characteristics

Symbol	Parameter	Condition	Standard			Unit
			Min.	Typ.	Max.	
$t_{d(P-R)}$	Time for internal power supply stabilization during power-on (2)		&	&	2,000	µs

Notes:
1. The measurement condition is V_{CC} = 1.8 to 5.5 V and T_{opr} = 25#C.
2. Waiting time until the internal power supply generation circuit stabilizes during power-on.

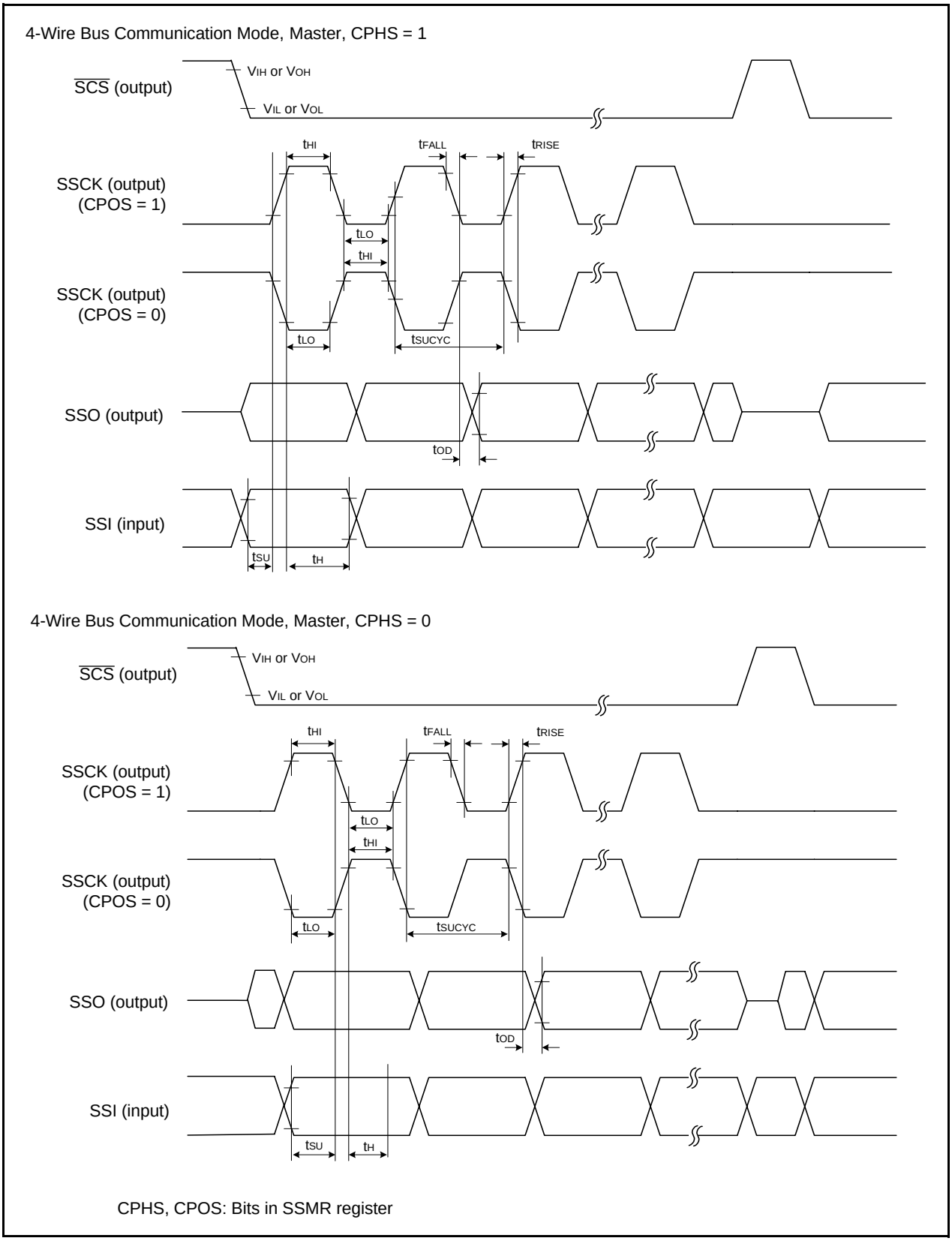

Figure 5.4 I/O Timing of Synchronous Serial Communication Unit (SSU) (Master)

Table 5.19 Electrical Characteristics (2) [3.3 V ≤ Vcc ≤ 5.5 V]
(Topr = &20 to 85#C (N version) / &40 to 85#C (D version), unless otherwise specified.)

Symbol	Parameter	Condition		Standard			Unit
				Min.	Typ.	Max.	
ICC	Power supply current (VCC = 3.3 to 5.5 V) Single-chip mode, output pins are open, other pins are VSS	High-speed clock mode	XIN = 20 MHz (square wave) High-speed on-chip oscillator off Low-speed on-chip oscillator on = 125 kHz No division	&	6.5	15	mA
			XIN = 16 MHz (square wave) High-speed on-chip oscillator off Low-speed on-chip oscillator on = 125 kHz No division	&	5.3	12.5	mA
			XIN = 10 MHz (square wave) High-speed on-chip oscillator off Low-speed on-chip oscillator on = 125 kHz No division	&	3.6	&	mA
			XIN = 20 MHz (square wave) High-speed on-chip oscillator off Low-speed on-chip oscillator on = 125 kHz Divide-by-8	&	3.0	&	mA
			XIN = 16 MHz (square wave) High-speed on-chip oscillator off Low-speed on-chip oscillator on = 125 kHz Divide-by-8	&	2.2	&	mA
			XIN = 10 MHz (square wave) High-speed on-chip oscillator off Low-speed on-chip oscillator on = 125 kHz Divide-by-8	&	1.5	&	mA
		High-speed on-chip oscillator mode	XIN clock off High-speed on-chip oscillator on fOCO-F = 20 MHz Low-speed on-chip oscillator on = 125 kHz No division	&	7.0	15	mA
			XIN clock off High-speed on-chip oscillator on fOCO-F = 20 MHz Low-speed on-chip oscillator on = 125 kHz Divide-by-8	&	3.0	&	mA
			XIN clock off High-speed on-chip oscillator on fOCO-F = 4 MHz Low-speed on-chip oscillator on = 125 kHz Divide-by-16, MSTIIC = MSTTRD = MSTTRC = 1	&	1	&	mA
		Low-speed on-chip oscillator mode	XIN clock off High-speed on-chip oscillator off Low-speed on-chip oscillator on = 125 kHz Divide-by-8, FMR27 = 1, VCA20 = 0	&	90	400	µA
		Low-speed clock mode	XIN clock off High-speed on-chip oscillator off Low-speed on-chip oscillator off XCIN clock oscillator on = 32 kHz No division, FMR27 = 1, VCA20 = 0	&	85	400	µA
			XIN clock off High-speed on-chip oscillator off Low-speed on-chip oscillator off XCIN clock oscillator on = 32 kHz No division, Program operation on RAM Flash memory off, FMSTP = 1, VCA20 = 0	&	47	&	µA
		Wait mode	XIN clock off High-speed on-chip oscillator off Low-speed on-chip oscillator on = 125 kHz While a WAIT instruction is executed Peripheral clock operation VCA27 = VCA26 = VCA25 = 0 VCA20 = 1	&	15	100	µA
			XIN clock off High-speed on-chip oscillator off Low-speed on-chip oscillator on = 125 kHz While a WAIT instruction is executed Peripheral clock off VCA27 = VCA26 = VCA25 = 0 VCA20 = 1	&	4	90	µA
			XIN clock off High-speed on-chip oscillator off Low-speed on-chip oscillator off XCIN clock oscillator on = 32 kHz (peripheral clock off) While a WAIT instruction is executed VCA27 = VCA26 = VCA25 = 0 VCA20 = 1	&	3.5	&	µA
		Stop mode	XIN clock off, Topr = 25#C High-speed on-chip oscillator off Low-speed on-chip oscillator off CM10 = 1, Peripheral clock off VCA27 = VCA26 = VCA25 = 0	&	2.0	5.0	µA
			XIN clock off, Topr = 85#C High-speed on-chip oscillator off Low-speed on-chip oscillator off CM10 = 1, Peripheral clock off VCA27 = VCA26 = VCA25 = 0	&	5.0 (1) 15 (2)	&	µA

Notes:
1. Value when the program ROM capacity of the product is 16 Kbytes to 32 Kbytes.
2. Value when the program ROM capacity of the product is 48 Kbytes to 128 Kbytes.

Timing Requirements
(Unless Otherwise Specified: Vcc = 5 V, Vss = 0 V at Topr = 25#C)

Table 5.20 External Clock Input (XOUT, XCIN)

Symbol	Parameter	Standard		Unit
		Min.	Max.	
$t_{c(XOUT)}$	XOUT input cycle time	50	&	ns
$t_{WH(XOUT)}$	XOUT input “H” width	24	&	ns
$t_{WL(XOUT)}$	XOUT input “L” width	24	&	ns
$t_{c(XCIN)}$	XCIN input cycle time	14	&	µs
$t_{WH(XCIN)}$	XCIN input “H” width	7	&	µs
$t_{WL(XCIN)}$	XCIN input “L” width	7	&	µs

Figure 5.8 External Clock Input Timing Diagram when VCC = 5 V

Table 5.21 TRAIO Input

Symbol	Parameter	Standard		Unit
		Min.	Max.	
$t_{c(TRAIO)}$	TRAIO input cycle time	100	&	ns
$t_{WH(TRAIO)}$	TRAIO input “H” width	40	&	ns
$t_{WL(TRAIO)}$	TRAIO input “L” width	40	&	ns

Figure 5.9 TRAIO Input Timing Diagram when Vcc = 5 V

Timing Requirements
(Unless Otherwise Specified: Vcc = 3 V, Vss = 0 V at Topr = 25#C)

Table 5.26 External Clock Input (XOUT, XCIN)

Symbol	Parameter	Standard		Unit
		Min.	Max.	
$t_{c(XOUT)}$	XOUT input cycle time	50	&	ns
$t_{WH(XOUT)}$	XOUT input “H” width	24	&	ns
$t_{WL(XOUT)}$	XOUT input “L” width	24	&	ns
$t_{c(XCIN)}$	XCIN input cycle time	14	&	µs
$t_{WH(XCIN)}$	XCIN input “H” width	7	&	µs
$t_{WL(XCIN)}$	XCIN input “L” width	7	&	µs

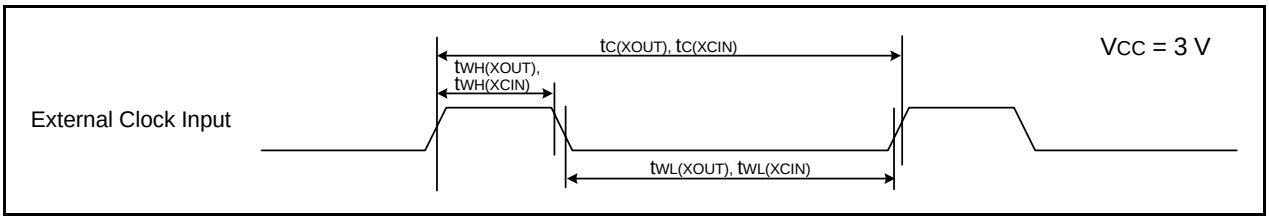

Figure 5.12 External Clock Input Timing Diagram when VCC = 3 V

Table 5.27 TRAIO Input

Symbol	Parameter	Standard		Unit
		Min.	Max.	
$t_{c(TRAIO)}$	TRAIO input cycle time	300	&	ns
$t_{WH(TRAIO)}$	TRAIO input “H” width	120	&	ns
$t_{WL(TRAIO)}$	TRAIO input “L” width	120	&	ns

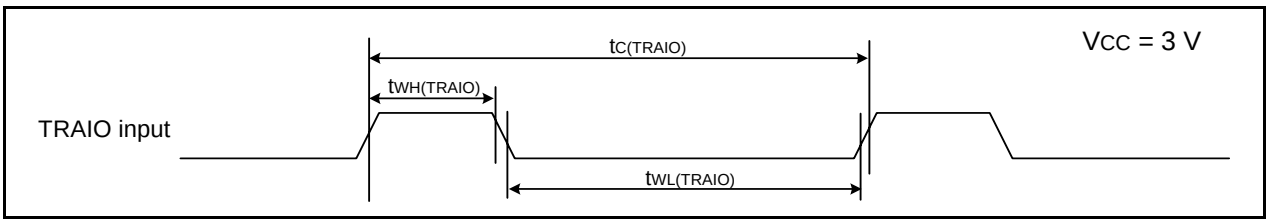

Figure 5.13 TRAIO Input Timing Diagram when Vcc = 3 V

Table 5.28 Serial Interface

Symbol	Parameter		Standard		Unit
			Min.	Max.	
$t_{c(CK)}$	CLKi input cycle time	When external clock is selected	300	&	ns
$t_{W(CKH)}$	CLKi input “H” width		150	&	ns
$t_{W(CKL)}$	CLKi Input “L” width		150	&	ns
$t_{d(C-Q)}$	TXDi output delay time		&	120	ns
$t_{h(C-Q)}$	TXDi hold time		0	&	ns
$t_{su(D-C)}$	RXDi input setup time		30	&	ns
$t_{h(C-D)}$	RXDi input hold time		90	&	ns
$t_{d(C-Q)}$	TXDi output delay time	When internal clock is selected	&	30	ns
$t_{su(D-C)}$	RXDi input setup time		120	&	ns
$t_{h(C-D)}$	RXDi input hold time		90	&	ns

i = 0 to 2

Note:

1. Vcc = 3 V and Topr = &20 to 85 #C (N version)/&40 to 85 #C (D version), unless otherwise specified.

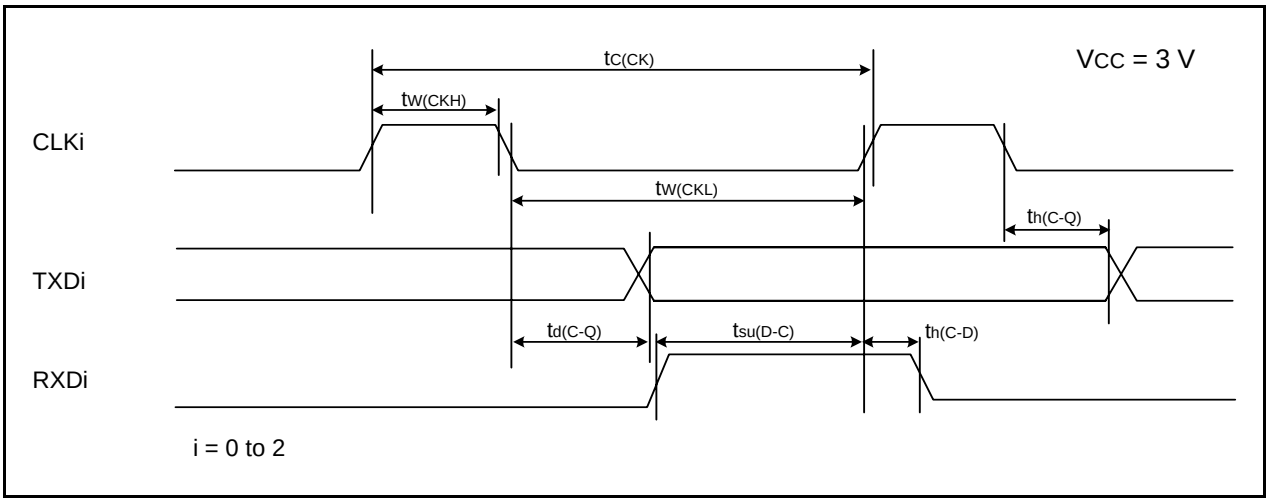

Figure 5.14 Serial Interface Timing Diagram when Vcc = 3 V

Table 5.29 External Interrupt $\overline{INTi}$ (i = 0 to 4) Input, Key Input Interrupt $\overline{KIi}$ (i = 0 to 3)

Symbol	Parameter	Standard		Unit
		Min.	Max.	
$t_{W(INH)}$	$\overline{INTi}$ input “H” width, $\overline{KIi}$ input “H” width	380 (1)	&	ns
$t_{W(INL)}$	$\overline{INTi}$ input “L” width, $\overline{KIi}$ input “L” width	380 (2)	&	ns

Notes:

1. When selecting the digital filter by the $\overline{INTi}$ input filter select bit, use an $\overline{INTi}$ input HIGH width of either (1/digital filter clock frequency × 3) or the minimum value of standard, whichever is greater.
2. When selecting the digital filter by the $\overline{INTi}$ input filter select bit, use an $\overline{INTi}$ input LOW width of either (1/digital filter clock frequency × 3) or the minimum value of standard, whichever is greater.

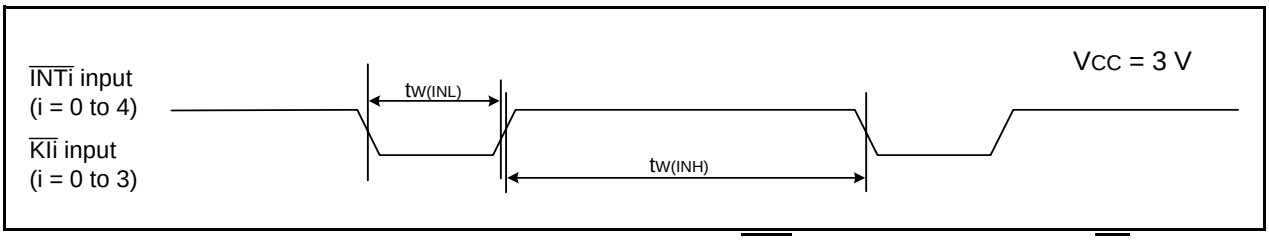

Figure 5.15 Input Timing Diagram for External Interrupt $\overline{INTi}$ and Key Input Interrupt $\overline{KIi}$ when Vcc = 3 V

Table 5.30 Electrical Characteristics (5) [1.8 V ≤ Vcc < 2.7 V]

Symbol	Parameter		Condition		Standard			Unit
					Min.	Typ.	Max.	
V_{OH}	Output “H” voltage	Other than XOUT	Drive capacity High	I_{OH} = &2 mA	V_{CC} & 0.5	&	V_{CC}	V
			Drive capacity Low	I_{OH} = &1 mA	V_{CC} & 0.5	&	V_{CC}	V
		XOUT		I_{OH} = &200 µA	1.0	&	V_{CC}	V
V_{OL}	Output “L” voltage	Other than XOUT	Drive capacity High	I_{OL} = 2 mA	&	&	0.5	V
			Drive capacity Low	I_{OL} = 1 mA	&	&	0.5	V
		XOUT		I_{OL} = 200 µA	&	&	0.5	V
V_{T+}-V_{T-}	Hysteresis	$\overline{INT0}$, $\overline{INT1}$, $\overline{INT2}$, $\overline{INT3}$, $\overline{INT4}$, $\overline{KI0}$, $\overline{KI1}$, $\overline{KI2}$, $\overline{KI3}$, TRAIO, TRCIOA, TRCIOB, TRCIOC, TRCIOD, TRDIOA0, TRDIOB0, TRDIOC0, TRDIOD0, TRDIOA1, TRDIOB1, TRDIOC1, TRDIOD1, TRCTRG, $\overline{TRCCLK}$, $\overline{ADTRG}$, RXD0, RXD1, RXD2, CLK0, CLK1, CLK2, SSI, SCL, SDA, SSO	V_{CC} = 2.2 V		0.05	0.2	&	V
		$\overline{RESET}$	V_{CC} = 2.2 V		0.05	0.20	&	V
I_{IH}	Input “H” current		VI = 2.2 V, V_{CC} = 2.2 V		&	&	4.0	µA
I_{IL}	Input “L” current		VI = 0 V, V_{CC} = 2.2 V		&	&	&4.0	µA
R_{PULLUP}	Pull-up resistance		VI = 0 V, V_{CC} = 2.2 V		70	140	300	k)
R_{fXIN}	Feedback resistance	XIN			&	0.3	&	M)
R_{fXCIN}	Feedback resistance	XCIN			&	8	&	M)
V_{RAM}	RAM hold voltage		During stop mode		1.8	&	&	V

Note:
1. 1.8 V ≤ V_{CC} < 2.7 V and T_{opr} = &20 to 85#C (N version) / &40 to 85#C (D version), f(XIN) = 5 MHz, unless otherwise specified.

Table 5.31 Electrical Characteristics (6) [1.8 V ≤ Vcc < 2.7 V]
(Topr = &20 to 85#C (N version) / &40 to 85#C (D version), unless otherwise specified.)

Symbol	Parameter	Condition		Standard			Unit
				Min.	Typ.	Max.	
ICC	Power supply current (VCC = 1.8 to 2.7 V) Single-chip mode, output pins are open, other pins are VSS	High-speed clock mode	XIN = 5 MHz (square wave) High-speed on-chip oscillator off Low-speed on-chip oscillator on = 125 kHz No division	&	2.2	&	mA
			XIN = 5 MHz (square wave) High-speed on-chip oscillator off Low-speed on-chip oscillator on = 125 kHz Divide-by-8	&	0.8	&	mA
		High-speed on-chip oscillator mode	XIN clock off High-speed on-chip oscillator on fOCO-F = 5 MHz Low-speed on-chip oscillator on = 125 kHz No division	&	2.5	10	mA
			XIN clock off High-speed on-chip oscillator on fOCO-F = 5 MHz Low-speed on-chip oscillator on = 125 kHz Divide-by-8	&	1.7	&	mA
			XIN clock off High-speed on-chip oscillator on fOCO-F = 4 MHz Low-speed on-chip oscillator on = 125 kHz Divide-by-16 MSTIIC = MSTTRD = MSTTRC = 1	&	1	&	mA
		Low-speed on-chip oscillator mode	XIN clock off High-speed on-chip oscillator off Low-speed on-chip oscillator on = 125 kHz Divide-by-8, FMR27 = 1, VCA20 = 0	&	90	300	µA
		Low-speed clock mode	XIN clock off High-speed on-chip oscillator off Low-speed on-chip oscillator off XCIN clock oscillator on = 32 kHz No division, FMR27 = 1, VCA20 = 0	&	80	350	µA
			XIN clock off High-speed on-chip oscillator off Low-speed on-chip oscillator off XCIN clock oscillator on = 32 kHz No division, Program operation on RAM Flash memory off, FMSTP = 1, VCA20 = 0	&	40	&	µA
		Wait mode	XIN clock off High-speed on-chip oscillator off Low-speed on-chip oscillator on = 125 kHz While a WAIT instruction is executed Peripheral clock operation VCA27 = VCA26 = VCA25 = 0 VCA20 = 1	&	15	90	µA
			XIN clock off High-speed on-chip oscillator off Low-speed on-chip oscillator on = 125 kHz While a WAIT instruction is executed Peripheral clock off VCA27 = VCA26 = VCA25 = 0 VCA20 = 1	&	4	80	µA
			XIN clock off High-speed on-chip oscillator off Low-speed on-chip oscillator off XCIN clock oscillator on = 32 kHz (peripheral clock off) While a WAIT instruction is executed VCA27 = VCA26 = VCA25 = 0 VCA20 = 1	&	3.5	&	µA
		Stop mode	XIN clock off, Topr = 25#C High-speed on-chip oscillator off Low-speed on-chip oscillator off CM10 = 1 Peripheral clock off VCA27 = VCA26 = VCA25 = 0	&	2.0	5	µA
			XIN clock off, Topr = 85#C High-speed on-chip oscillator off Low-speed on-chip oscillator off CM10 = 1 Peripheral clock off VCA27 = VCA26 = VCA25 = 0	&	5.0 (1) 15 (2)	&	µA

Notes:
1. Value when the program ROM capacity of the product is 16 Kbytes to 32 Kbytes.
2. Value when the program ROM capacity of the product is 48 Kbytes to 128 Kbytes.

Package Dimensions

Diagrams showing the latest package dimensions and mounting information are available in the “Packages” section of the Renesas Electronics website.

JEITA Package Code	RENESAS Code	Previous Code	MASS[Typ.]
P-LQFP52-10x10-0.65	PLQP0052JA-A	52P6A-A	0.3g

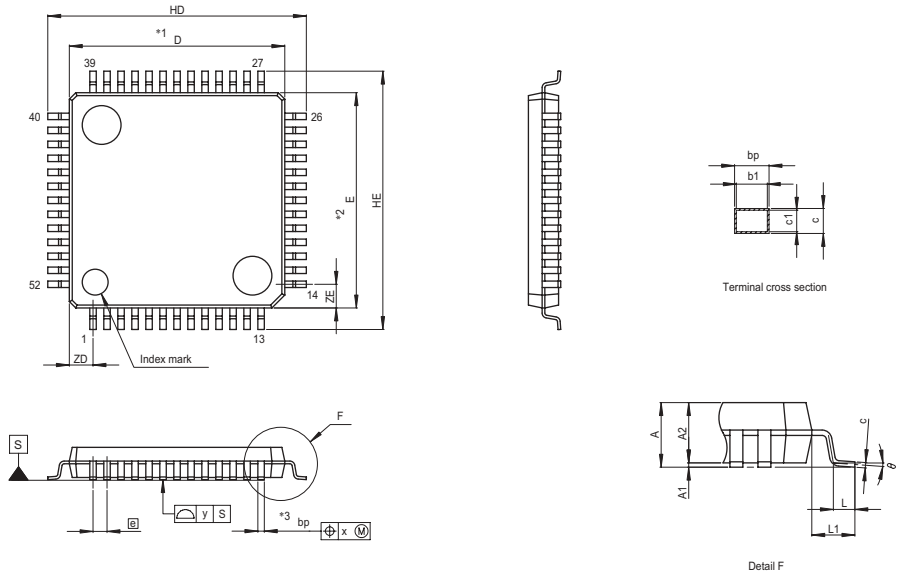

NOTE)
1. DIMENSIONS "*1" AND "*2" DO NOT INCLUDE MOLD FLASH.
2. DIMENSION "*3" DOES NOT INCLUDE TRIM OFFSET.

Reference Symbol	Dimension in Millimeters		
	Min	Nom	Max
D	9.9	10.0	10.1
E	9.9	10.0	10.1
A_2	—	1.4	—
H_D	11.8	12.0	12.2
H_E	11.8	12.0	12.2
A	—	—	1.7
A_1	0.05	0.1	0.15
b_p	0.27	0.32	0.37
b_1	—	0.30	—
c	0.09	0.145	0.20
c_1	—	0.125	—
θ	0°	—	8°
e	—	0.65	—
x	—	—	0.13
y	—	—	0.10
Z_D	—	1.1	—
Z_E	—	1.1	—
L	0.35	0.5	0.65
L_1	—	1.0	—

General Precautions in the Handling of MPU/MCU Products

The following usage notes are applicable to all MPU/MCU products from Renesas. For detailed usage notes on the products covered by this manual, refer to the relevant sections of the manual. If the descriptions under General Precautions in the Handling of MPU/MCU Products and in the body of the manual differ from each other, the description in the body of the manual takes precedence.

1. Handling of Unused Pins

   Handle unused pins in accord with the directions given under Handling of Unused Pins in the manual.

   — The input pins of CMOS products are generally in the high-impedance state. In operation with an unused pin in the open-circuit state, extra electromagnetic noise is induced in the vicinity of LSI, an associated shoot-through current flows internally, and malfunctions occur due to the false recognition of the pin state as an input signal become possible. Unused pins should be handled as described under Handling of Unused Pins in the manual.

2. Processing at Power-on

   The state of the product is undefined at the moment when power is supplied.

   — The states of internal circuits in the LSI are indeterminate and the states of register settings and pins are undefined at the moment when power is supplied.

     In a finished product where the reset signal is applied to the external reset pin, the states of pins are not guaranteed from the moment when power is supplied until the reset process is completed.

     In a similar way, the states of pins in a product that is reset by an on-chip power-on reset function are not guaranteed from the moment when power is supplied until the power reaches the level at which resetting has been specified.

3. Prohibition of Access to Reserved Addresses

   Access to reserved addresses is prohibited.

   — The reserved addresses are provided for the possible future expansion of functions. Do not access these addresses; the correct operation of LSI is not guaranteed if they are accessed.

4. Clock Signals

   After applying a reset, only release the reset line after the operating clock signal has become stable. When switching the clock signal during program execution, wait until the target clock signal has stabilized.

   — When the clock signal is generated with an external resonator (or from an external oscillator) during a reset, ensure that the reset line is only released after full stabilization of the clock signal. Moreover, when switching to a clock signal produced with an external resonator (or by an external oscillator) while program execution is in progress, wait until the target clock signal is stable.

5. Differences between Products

   Before changing from one product to another, i.e. to one with a different part number, confirm that the change will not lead to problems.

   — The characteristics of MPU/MCU in the same group but having different part numbers may differ because of the differences in internal memory capacity and layout pattern. When changing to products of different part numbers, implement a system-evaluation test for each of the products.