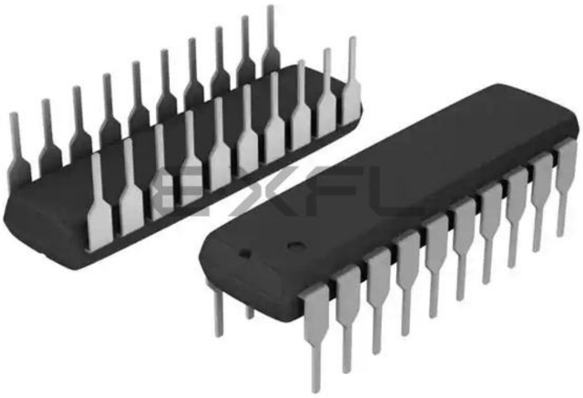

Welcome to E-XFL.COM

What is "Embedded - Microcontrollers"?

"Embedded - Microcontrollers" refer to small, integrated circuits designed to perform specific tasks within larger systems. These microcontrollers are essentially compact computers on a single chip, containing a processor core, memory, and programmable input/output peripherals. They are called "embedded" because they are embedded within electronic devices to control various functions, rather than serving as standalone computers. Microcontrollers are crucial in modern electronics, providing the intelligence and control needed for a wide range of applications.

Applications of "Embedded - Microcontrollers"

Details	
Product Status	Obsolete
Core Processor	Z8
Core Size	8-Bit
Speed	8MHz
Connectivity	-
Peripherals	HLVD, POR, WDT
Number of I/O	16
Program Memory Size	16KB (16K x 8)
Program Memory Type	OTP
EEPROM Size	-
RAM Size	237 x 8
Voltage - Supply (Vcc/Vdd)	2V ~ 3.6V
Data Converters	-
Oscillator Type	Internal
Operating Temperature	-40°C ~ 105°C (TA)
Mounting Type	Through Hole
Package / Case	20-DIP (0.300", 7.62mm)
Supplier Device Package	-
Purchase URL	https://www.e-xfl.com/product-detail/zilog/zgp323lep2016g

Table of Contents

Development Features 1

General Description 2

Pin Description 4

Absolute Maximum Ratings 10

Standard Test Conditions 10

DC Characteristics 11

AC Characteristics 14

Pin Functions 16
  XTAL1 Crystal 1 (Time-Based Input) 16
  XTAL2 Crystal 2 (Time-Based Output) 16
  Port 0 (P07–P00) 16
  Port 1 (P17–P10) 17
  Port 2 (P27–P20) 18
  Port 3 (P37–P30) 19
  RESET (Input, Active Low) 23

Functional Description 23
  Program Memory 23
  RAM 23
  Expanded Register File 24
  Register File 28
  Stack 29
  Timers 30
  Counter/Timer Functional Blocks 38

Expanded Register File Control Registers (0D) 64

Expanded Register File Control Registers (0F) 69

Standard Control Registers 73

Package Information 80

Ordering Information 89

Precharacterization Product 95

Development Features

Table 1 lists the features of ZiLOG®'s Z8 GP^{TM} OTP MCU Family family members.

Table 1. Features

Device	OTP (KB)	RAM (Bytes)	I/O Lines	Voltage Range
ZGP323L OTP MCU Family	4, 8, 16, 32	237	32, 24 or 16	2.0V–3.6V

- Low power consumption–6mW (typical)
- T = Temperature
  S = Standard 0° to +70°C
  E = Extended -40° to +105°C
  A = Automotive -40° to +125°C
- Three standby modes:
  - STOP—2µA (typical)
  - HALT—0.8mA (typical)
  - Low voltage reset
- Special architecture to automate both generation and reception of complex pulses or signals:
  - One programmable 8-bit counter/timer with two capture registers and two load registers
  - One programmable 16-bit counter/timer with one 16-bit capture register pair and one 16-bit load register pair
  - Programmable input glitch filter for pulse reception
- Six priority interrupts
  - Three external
  - Two assigned to counter/timers
  - One low-voltage detection interrupt
- Low voltage detection and high voltage detection flags
- Programmable Watch-Dog Timer/Power-On Reset (WDT/POR) circuits
- Two independent comparators with programmable interrupt polarity
- Programmable EPROM options
  - Port 0: 0–3 pull-up transistors
  - Port 0: 4–7 pull-up transistors

- Port 1: 0–3 pull-up transistors
- Port 1: 4–7 pull-up transistors
- Port 2: 0–7 pull-up transistors
- EPROM Protection
- WDT enabled at POR

Note: The mask option pull-up transistor has a *typical* equivalent resistance of 200 KΩ ±50% at V_{CC}=3 V and 450 KΩ ±50% at V_{CC}=2 V.

General Description

The Z8 GP^{TM} OTP MCU Family is an OTP-based member of the MCU family of infrared microcontrollers. With 237B of general-purpose RAM and up to 32KB of OTP, ZiLOG®'s CMOS microcontrollers offer fast-executing, efficient use of memory, sophisticated interrupts, input/output bit manipulation capabilities, automated pulse generation/reception, and internal key-scan pull-up transistors.

The Z8 GP^{TM} OTP MCU Family architecture (Figure 1) is based on ZiLOG's 8-bit microcontroller core with an Expanded Register File allowing access to register-mapped peripherals, input/output (I/O) circuits, and powerful counter/timer circuitry. The Z8® offers a flexible I/O scheme, an efficient register and address space structure, and a number of ancillary features that are useful in many consumer, automotive, computer peripheral, and battery-operated hand-held applications.

There are three basic address spaces available to support a wide range of configurations: Program Memory, Register File and Expanded Register File. The register file is composed of 256 Bytes (B) of RAM. It includes 4 I/O port registers, 16 control and status registers, and 236 general-purpose registers. The Expanded Register File consists of two additional register groups (F and D).

To unburden the program from coping with such real-time problems as generating complex waveforms or receiving and demodulating complex waveform/pulses, the Z8 GP OTP MCU offers a new intelligent counter/timer architecture with 8-bit and 16-bit counter/timers (see Figure 2). Also included are a large number of user-selectable modes and two on-board comparators to process analog signals with separate reference voltages.

Note: All signals with an overline, “‾”, are active Low. For example, B/$\overline{\text{W}}$, in which WORD is active Low, and $\overline{\text{B}}$/W, in which BYTE is active Low.

Power connections use the conventional descriptions listed in Table 2.

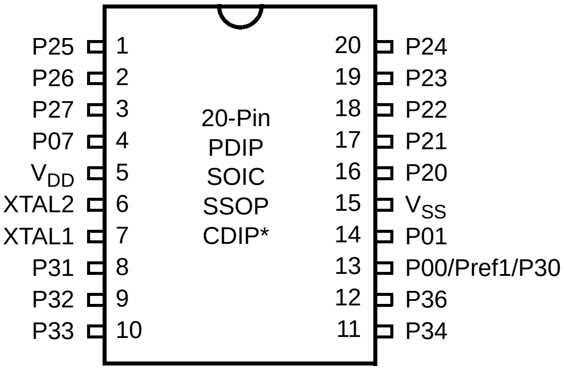
P25
P26
P27
P07
V_{DD}
XTAL2
XTAL1
P31
P32
P33
1
2
3
4
5
6
7
8
9
10
20-Pin
PDIP
SOIC
SSOP
CDIP*
20
19
18
17
16
15
14
13
12
11
P24
P23
P22
P21
P20
V_{SS}
P01
P00/Pref1/P30
P36
P34

Figure 3. 20-Pin PDIP/SOIC/SSOP/CDIP* Pin Configuration

Table 3. 20-Pin PDIP/SOIC/SSOP/CDIP* Pin Identification

Pin #	Symbol	Function	Direction
1–3	P25–P27	Port 2, Bits 5,6,7	Input/Output
4	P07	Port 0, Bit 7	Input/Output
5	V_{DD}	Power Supply	
6	XTAL2	Crystal Oscillator Clock	Output
7	XTAL1	Crystal Oscillator Clock	Input
8–10	P31–P33	Port 3, Bits 1,2,3	Input
11,12	P34. P36	Port 3, Bits 4,6	Output
13	P00/Pref1/P30	Port 0, Bit 0/Analog reference input Port 3 Bit 0	Input/Output for P00 Input for Pref1/P30
14	P01	Port 0, Bit 1	Input/Output
15	V_{SS}	Ground	
16–20	P20–P24	Port 2, Bits 0,1,2,3,4	Input/Output

Note: *Windowed Cerdip. These units are intended to be used for engineering code development only. ZiLOG does not recommend/guarantee this package for production use.

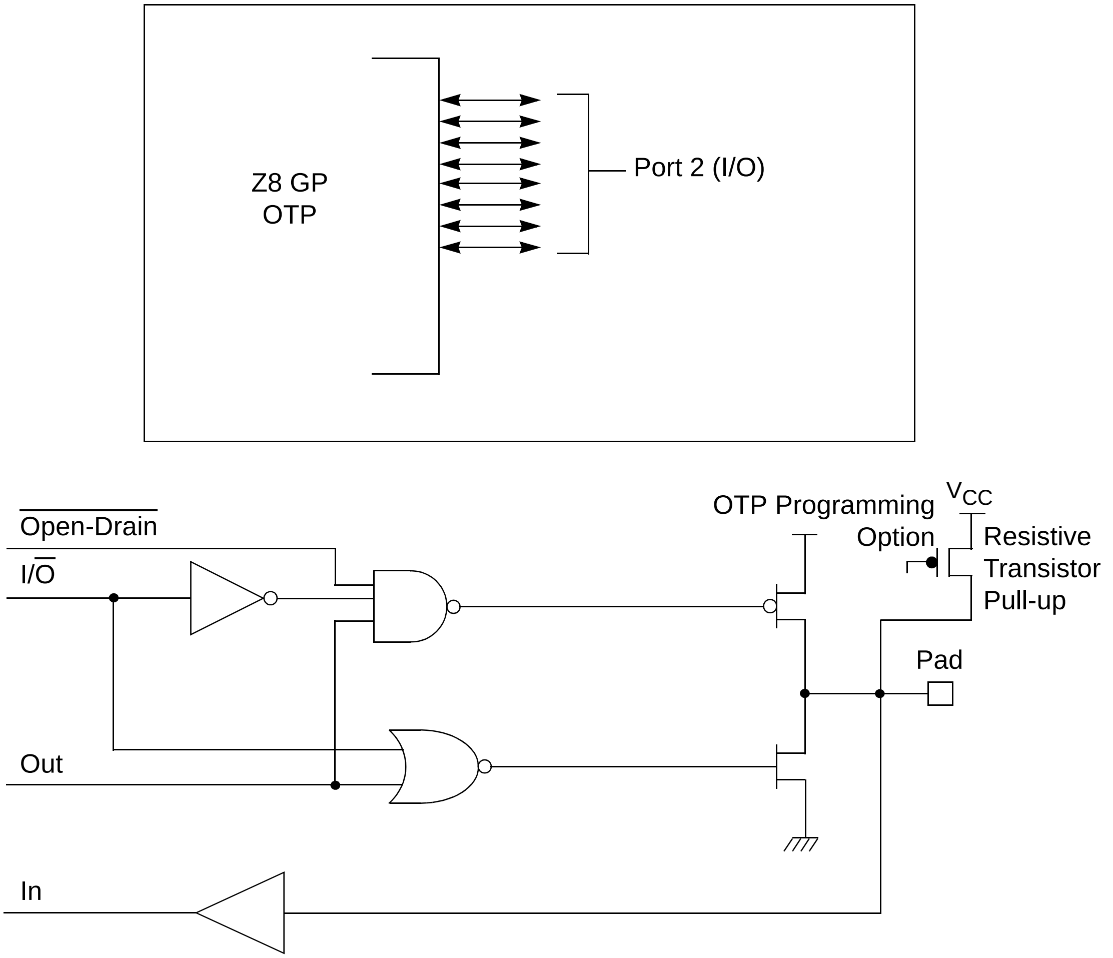
Z8 GP
OTP
Port 2 (I/O)
Open-Drain
I/O
Out
In
OTP Programming
Option
V_{CC}
Resistive
Transistor
Pull-up
Pad

Figure 11. Port 2 Configuration

Port 3 (P37–P30)

Port 3 is a 8-bit, CMOS-compatible fixed I/O port (see Figure 12). Port 3 consists of four fixed input (P33–P30) and four fixed output (P37–P34), which can be configured under software control for interrupt and as output from the counter/timers. P30, P31, P32, and P33 are standard CMOS inputs; P34, P35, P36, and P37 are push-pull outputs.

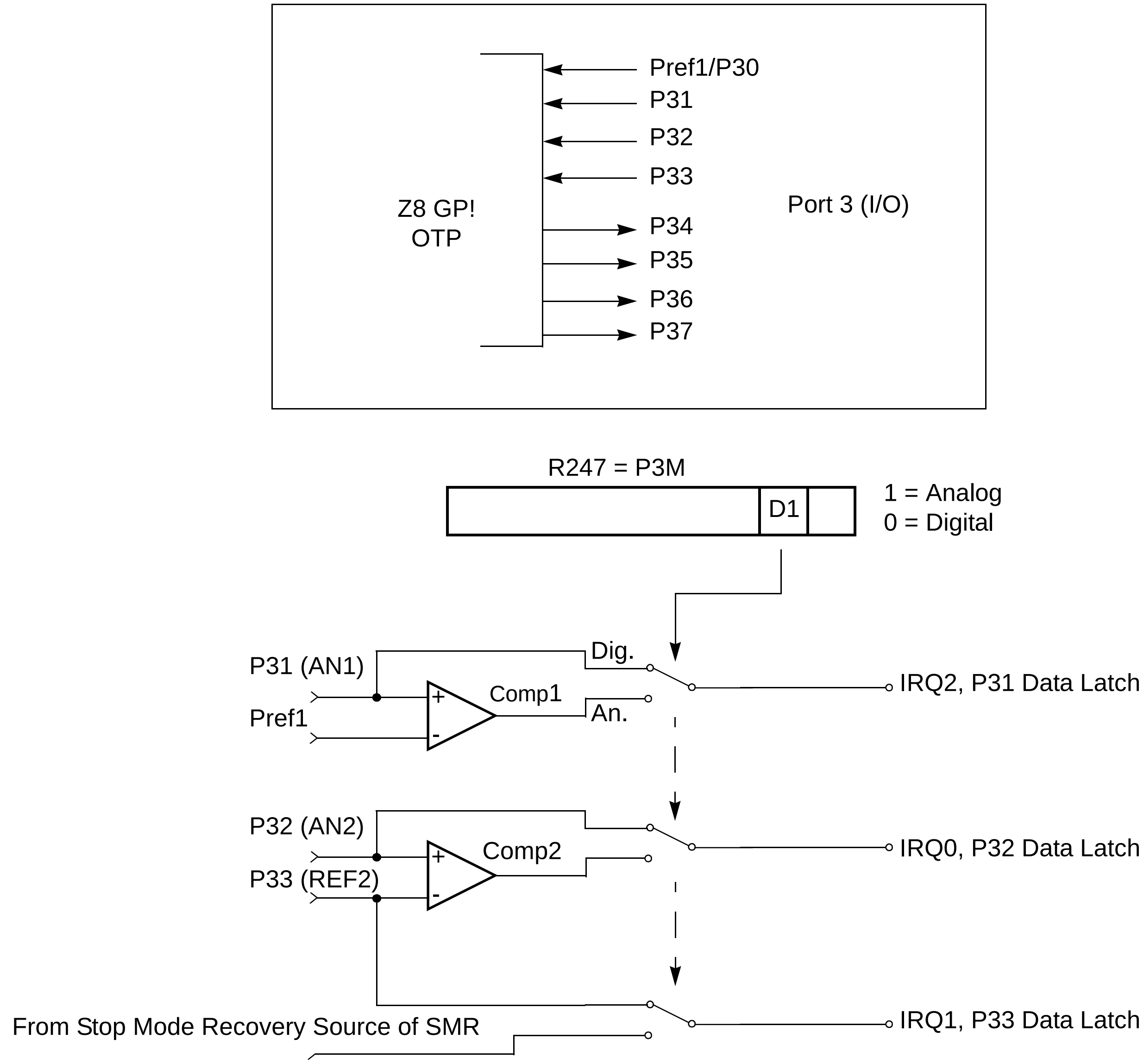
Pref1/P30
P31
P32
P33
P34
P35
P36
P37
Z8 GP!
OTP
Port 3 (I/O)
R247 = P3M
D1
1 = Analog
0 = Digital
P31 (AN1)
Pref1
+
-
Comp1
Dig.
An.
IRQ2, P31 Data Latch
P32 (AN2)
P33 (REF2)
+
-
Comp2
IRQ0, P32 Data Latch
From Stop Mode Recovery Source of SMR
IRQ1, P33 Data Latch

Figure 12. Port 3 Configuration

Two on-board comparators process analog signals on P31 and P32, with reference to the voltage on Pref1 and P33. The analog function is enabled by programming the Port 3 Mode Register (bit 1). P31 and P32 are programmable as rising, falling, or both edge triggered interrupts (IRQ register bits 6 and 7). Pref1 and P33 are the comparator reference voltage inputs. Access to the Counter Timer edge-detection circuit is through P31 or P20 (see “T8 and T16 Common Functions—

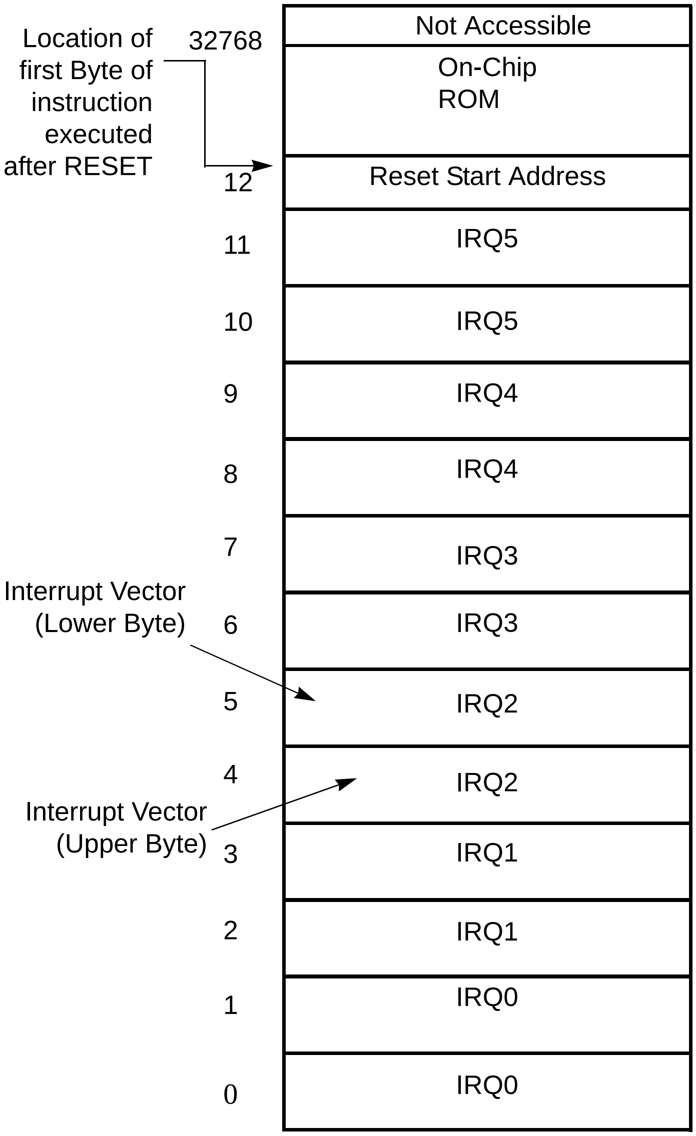
Location of first Byte of instruction executed after RESET
32768
Not Accessible
On-Chip ROM
12
Reset Start Address
11
IRQ5
10
IRQ5
9
IRQ4
8
IRQ4
7
IRQ3
Interrupt Vector (Lower Byte)
6
IRQ3
5
IRQ2
4
IRQ2
Interrupt Vector (Upper Byte)
3
IRQ1
2
IRQ1
1
IRQ0
0
IRQ0

Figure 14. Program Memory Map (32K OTP)

Expanded Register File

The register file has been expanded to allow for additional system control registers and for mapping of additional peripheral devices into the register address area. The Z8® register address space (R0 through R15) has been implemented as 16 banks, with 16 registers per bank. These register groups are known as the

ERF (Expanded Register File). Bits 7–4 of register RP select the working register group. Bits 3–0 of register RP select the expanded register file bank.

Note: An expanded register bank is also referred to as an expanded register group (see Figure 15).

The upper nibble of the register pointer (see Figure 16) selects which working register group, of 16 bytes in the register file, is accessed out of the possible 256. The lower nibble selects the expanded register file bank and, in the case of the Z8 GP family, banks 0, F, and D are implemented. A `0H` in the lower nibble allows the normal register file (bank 0) to be addressed. Any other value from `1H` to `FH` exchanges the lower 16 registers to an expanded register bank.

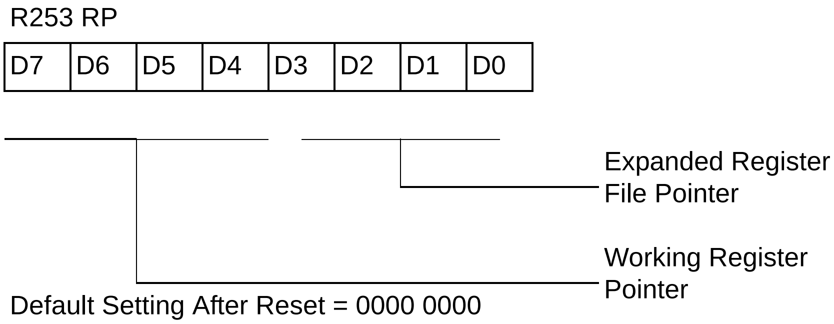
R253 RP
D7
D6
D5
D4
D3
D2
D1
D0
Expanded Register File Pointer
Working Register Pointer
Default Setting After Reset = 0000 0000

Figure 16. Register Pointer

Example: Z8 GP: (See Figure 15 on page 26)

R253 RP = 00h
R0 = Port 0
R1 = Port 1
R2 = Port 2
R3 = Port 3

But if:

R253 RP = 0Dh
R0 = CTRL0
R1 = CTRL1
R2 = CTRL2
R3 = Reserved

Counter/Timer2 LS-Byte Hold Register—TC16L(D)06H

Field	Bit Position		Description
T16_Data_LO	[7:0]	R/W	Data

Counter/Timer8 High Hold Register—TC8H(D)05H

Field	Bit Position		Description
T8_Level_HI	[7:0]	R/W	Data

Counter/Timer8 Low Hold Register—TC8L(D)04H

Field	Bit Position		Description
T8_Level_LO	[7:0]	R/W	Data

CTR0 Counter/Timer8 Control Register—CTR0(D)00H

Table 12 lists and briefly describes the fields for this register.

Table 12. CTR0(D)00H Counter/Timer8 Control Register

Field	Bit Position		Value	Description
T8_Enable	7-------	R/W	0*	Counter Disabled
			1	Counter Enabled
			0	Stop Counter
			1	Enable Counter
Single/Modulo-N	-6-------	R/W	0	Modulo-N
			1	Single Pass
Time_Out	--5------	R/W	0	No Counter Time-Out
			1	Counter Time-Out Occurred
			0	No Effect
			1	Reset Flag to 0
T8 _Clock	---43---	R/W	0 0	SCLK
			0 1	SCLK/2
			1 0	SCLK/4
			1 1	SCLK/8
Capture_INT_Mask	-----2--	R/W	0	Disable Data Capture Interrupt
			1	Enable Data Capture Interrupt

Capture_INT_Mask

Set this bit to allow an interrupt when data is captured into either LO8 or HI8 upon a positive or negative edge detection in demodulation mode.

Counter_INT_Mask

Set this bit to allow an interrupt when T8 has a timeout.

P34_Out

This bit defines whether P34 is used as a normal output pin or the T8 output.

T8 and T16 Common Functions—CTR1(0D)01H

This register controls the functions in common with the T8 and T16.

Table 13 lists and briefly describes the fields for this register.

Table 13. CTR1(0D)01H T8 and T16 Common Functions

Field	Bit Position		Value	Description
Mode	`7-------`	R/W	0*	Transmit Mode
				Demodulation Mode
P36_Out/ Demodulator_Input	`-6------`	R/W		Transmit Mode
			0*	Port Output
			1	T8/T16 Output
				Demodulation Mode
			0	P31
			1	P20
T8/T16_Logic/ Edge _Detect	`--54----`	R/W		Transmit Mode
			00**	AND
			01	OR
			10	NOR
			11	NAND
				Demodulation Mode
			00**	Falling Edge
			01	Rising Edge
			10	Both Edges
			11	Reserved

T8/T16_Logic/Edge _Detect

In TRANSMIT Mode, this field defines how the outputs of T8 and T16 are combined (AND, OR, NOR, NAND).

In DEMODULATION Mode, this field defines which edge should be detected by the edge detector.

Transmit_Submode/Glitch Filter

In Transmit Mode, this field defines whether T8 and T16 are in the PING-PONG mode or in independent normal operation mode. Setting this field to “NORMAL OPERATION Mode” terminates the “PING-PONG Mode” operation. When set to 10, T16 is immediately forced to a 0; a setting of 11 forces T16 to output a 1.

In DEMODULATION Mode, this field defines the width of the glitch that must be filtered out.

Initial_T8_Out/Rising_Edge

In TRANSMIT Mode, if 0, the output of T8 is set to 0 when it starts to count. If 1, the output of T8 is set to 1 when it starts to count. When the counter is not enabled and this bit is set to 1 or 0, T8_OUT is set to the opposite state of this bit. This ensures that when the clock is enabled, a transition occurs to the initial state set by CTR1, D1.

In DEMODULATION Mode, this bit is set to 1 when a rising edge is detected in the input signal. In order to reset the mode, a 1 should be written to this location.

Initial_T16 Out/Falling _Edge

In TRANSMIT Mode, if it is 0, the output of T16 is set to 0 when it starts to count. If it is 1, the output of T16 is set to 1 when it starts to count. This bit is effective only in Normal or PING-PONG Mode (CTR1, D3; D2). When the counter is not enabled and this bit is set, T16_OUT is set to the opposite state of this bit. This ensures that when the clock is enabled, a transition occurs to the initial state set by CTR1, D0.

In DEMODULATION Mode, this bit is set to 1 when a falling edge is detected in the input signal. In order to reset it, a 1 should be written to this location.

Note: Modifying CTR1 (D1 or D0) while the counters are enabled causes unpredictable output from T8/16_OUT.

CTR2 Counter/Timer 16 Control Register—CTR2(D)02H

Table 14 lists and briefly describes the fields for this register.

```
FF          NOP          ; clear the pipeline
6F          Stop         ; enter Stop Mode
```

or

```
FF          NOP          ; clear the pipeline
7F          HALT         ; enter HALT Mode
```

Port Configuration Register

The Port Configuration (PCON) register (Figure 32) configures the comparator output on Port 3. It is located in the expanded register 2 at Bank F, location 00.

PCON(FH)00H

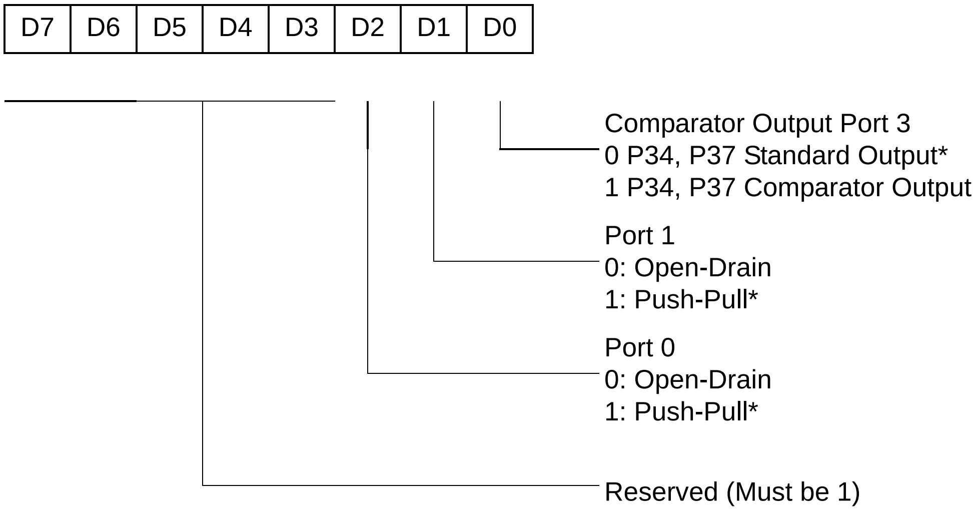
D7
D6
D5
D4
D3
D2
D1
D0
Comparator Output Port 3
0 P34, P37 Standard Output*
1 P34, P37 Comparator Output
Port 1
0: Open-Drain
1: Push-Pull*
Port 0
0: Open-Drain
1: Push-Pull*
Reserved (Must be 1)

* Default setting after reset

Figure 32. Port Configuration Register (PCON) (Write Only)

Comparator Output Port 3 (D0)

Bit 0 controls the comparator used in Port 3. A 1 in this location brings the comparator outputs to P34 and P37, and a 0 releases the Port to its standard I/O configuration.

Port 1 Output Mode (D1)

Bit 1 controls the output mode of port 1. A 1 in this location sets the output to push-pull, and a 0 sets the output to open-drain.

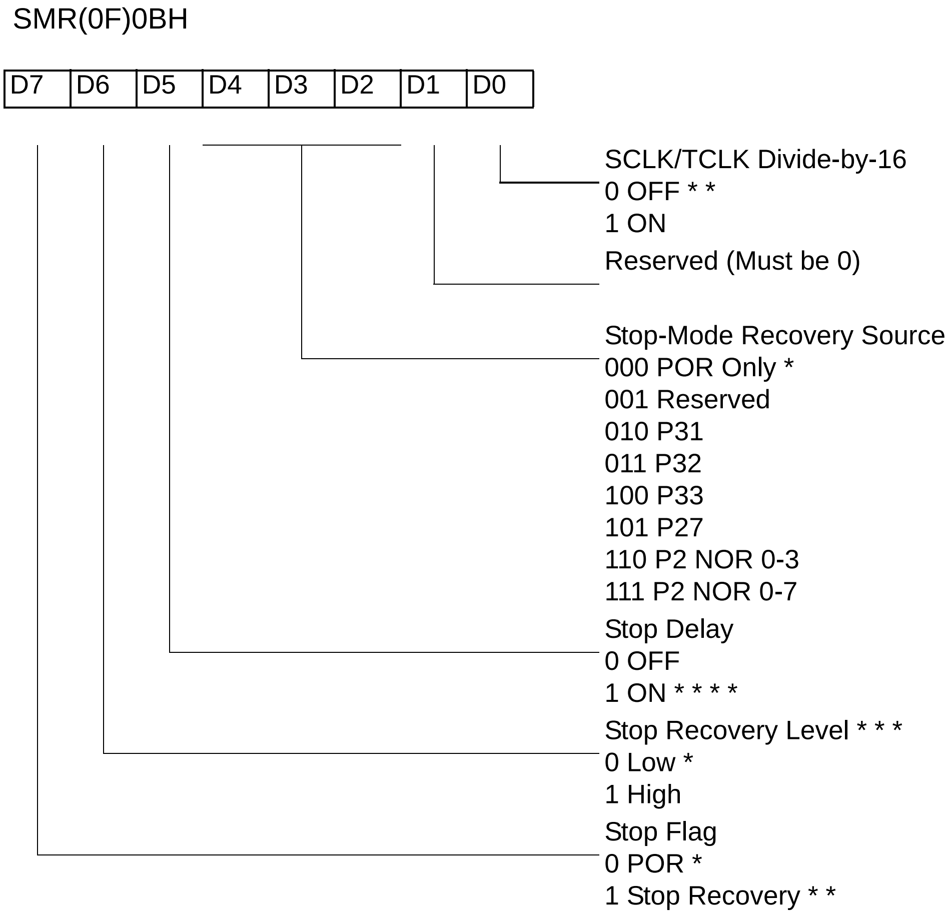
SMR(0F)0BH
D7
D6
D5
D4
D3
D2
D1
D0
SCLK/TCLK Divide-by-16
0 OFF * *
1 ON
Reserved (Must be 0)
Stop-Mode Recovery Source
000 POR Only *
001 Reserved
010 P31
011 P32
100 P33
101 P27
110 P2 NOR 0-3
111 P2 NOR 0-7
Stop Delay
0 OFF
1 ON * * * *
Stop Recovery Level * * *
0 Low *
1 High
Stop Flag
0 POR *
1 Stop Recovery * *

* Default after Power On Reset or Watch-Dog Reset
* * Set after STOP Mode Recovery
* * * At the XOR gate input
* * * * Default setting after reset. Must be 1 if using a crystal or resonator clock source.

Figure 33. STOP Mode Recovery Register

SCLK/TCLK Divide-by-16 Select (D0)

D0 of the SMR controls a divide-by-16 prescaler of SCLK/TCLK (Figure 34). This control selectively reduces device power consumption during normal processor execution (SCLK control) and/or Halt Mode (where TCLK sources interrupt logic). After Stop Mode Recovery, this bit is set to a 0.

Table 20. Watch-Dog Timer Time Select

D1	D0	Timeout of Internal RC-Oscillator
0	0	5ms min.
0	1	10ms min.
1	0	20ms min.
1	1	80ms min.

WDTMR During Halt (D2)

This bit determines whether or not the WDT is active during HALT Mode. A 1 indicates active during HALT. The default is 1. See Figure 38.

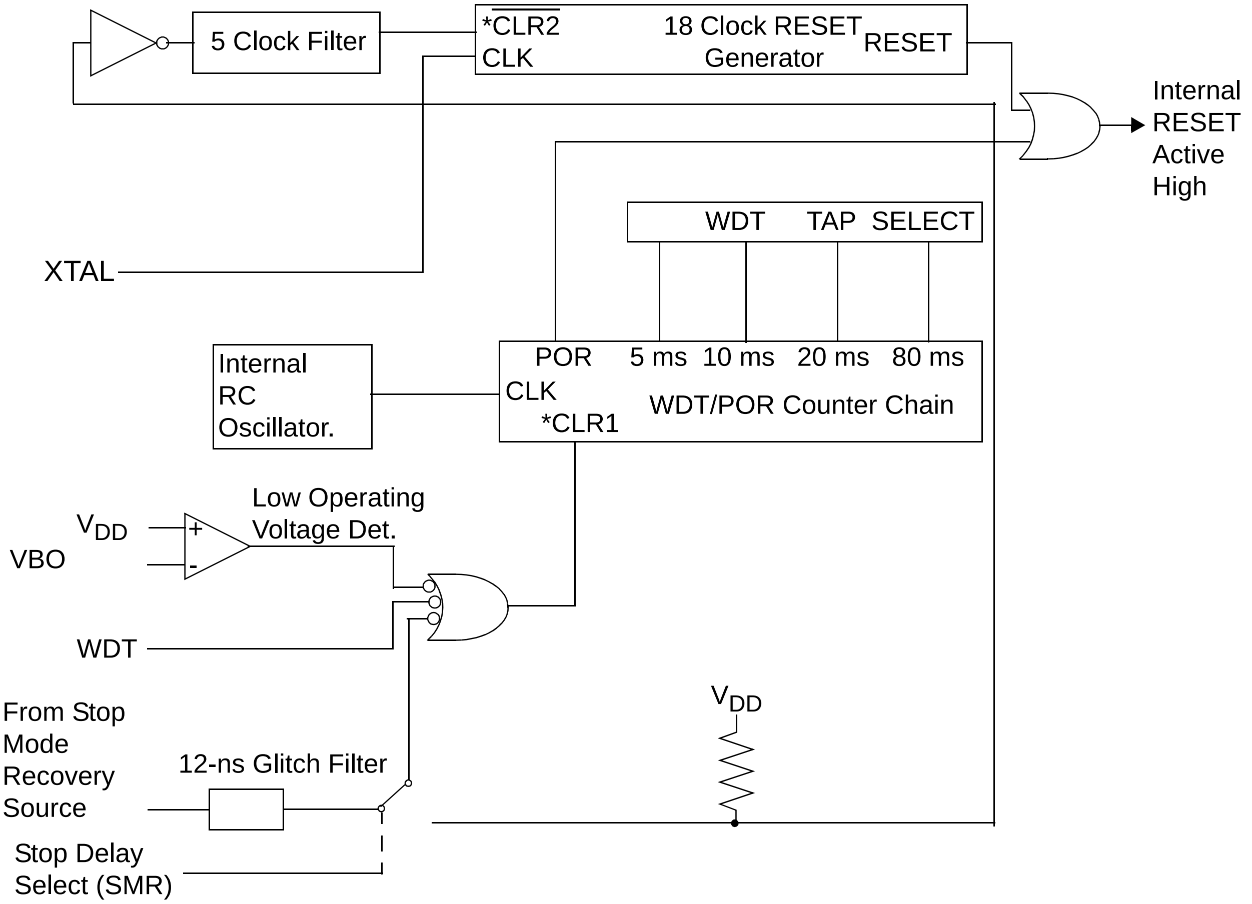
5 Clock Filter
*CLR2
CLK
18 Clock RESET Generator
RESET
Internal RESET Active High
WDT TAP SELECT
XTAL
Internal RC Oscillator.
POR
5 ms
10 ms
20 ms
80 ms
CLK
*CLR1
WDT/POR Counter Chain
Low Operating Voltage Det.
VDD
VBO
+
-
WDT
VDD
From Stop Mode Recovery Source
12-ns Glitch Filter
Stop Delay Select (SMR)

* CLR1 and $\overline{\text{CLR2}}$ enable the WDT/POR and 18 Clock Reset timers respectively upon a Low-to-High input translation.

Figure 38. Resets and WDT

R249 IPR(F9H)

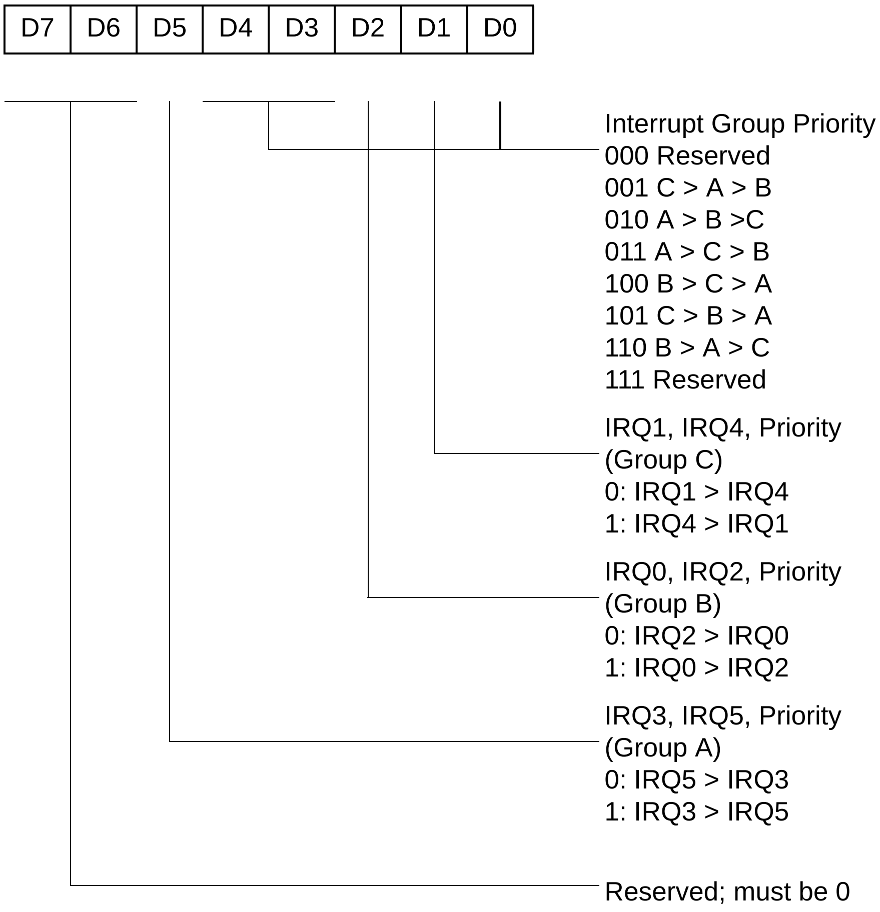

Interrupt Group Priority
000 Reserved
001 C > A > B
010 A > B >C
011 A > C > B
100 B > C > A
101 C > B > A
110 B > A > C
111 Reserved

IRQ1, IRQ4, Priority
(Group C)
0: IRQ1 > IRQ4
1: IRQ4 > IRQ1

IRQ0, IRQ2, Priority
(Group B)
0: IRQ2 > IRQ0
1: IRQ0 > IRQ2

IRQ3, IRQ5, Priority
(Group A)
0: IRQ5 > IRQ3
1: IRQ3 > IRQ5

Reserved; must be 0

Figure 51. Interrupt Priority Register (F9H: Write Only)

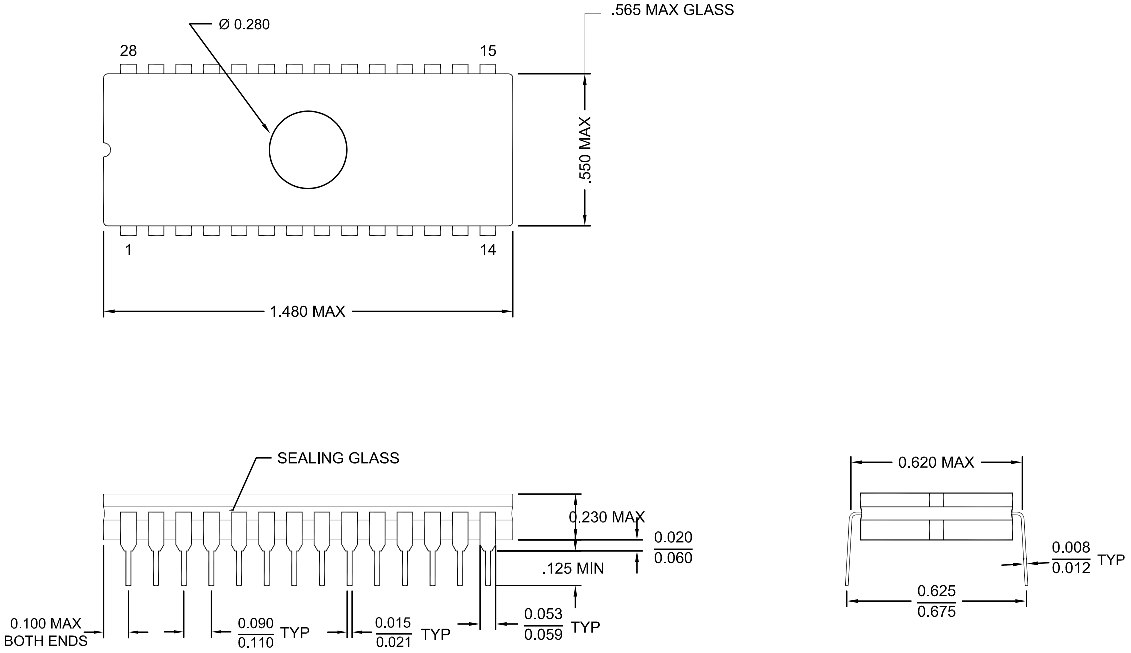
.565 MAX GLASS
Ø 0.280
28
15
.550 MAX
1
14
1.480 MAX
SEALING GLASS
0.230 MAX
0.020
0.060
.125 MIN
0.100 MAX
BOTH ENDS
0.090
0.110
TYP
0.015
0.021
TYP
0.053
0.059
TYP
0.620 MAX
0.008
0.012
TYP
0.625
0.675

Figure 62. 28-Pin CDIP Package

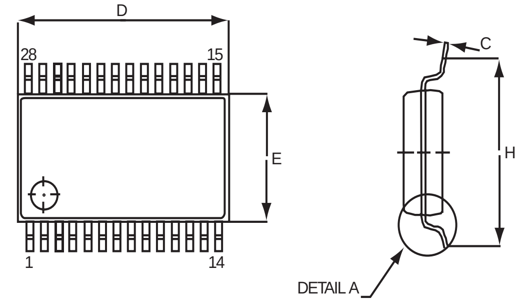
D
28
15
E
H
C
1
14
DETAIL A

SYMBOL	MILLIMETER			INCH		
	MIN	NOM	MAX	MIN	NOM	MAX
A	1.73	1.86	1.99	0.068	0.073	0.078
A1	0.05	0.13	0.21	0.002	0.005	0.008
A2	1.68	1.73	1.78	0.066	0.068	0.070
B	0.25		0.38	0.010		0.015
C	0.09	–	0.20	0.004	0.006	0.008
D	10.07	10.20	10.33	0.397	0.402	0.407
E	5.20	5.30	5.38	0.205	0.209	0.212
$\boxed{e}$	0.65 TYP			0.0256 TYP		
H	7.65	7.80	7.90	0.301	0.307	0.311
L	0.63	0.75	0.95	0.025	0.030	0.037

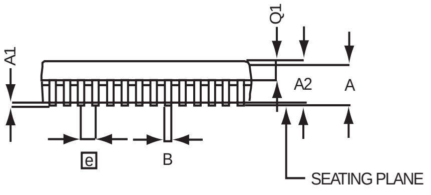
A1
Q1
A2
A
e
B
SEATING PLANE

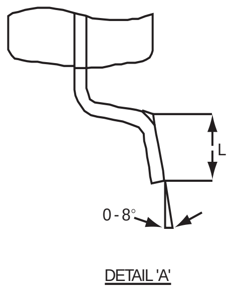
L
0 - 8°
DETAIL 'A'

CONTROLLING DIMENSIONS: MM
LEADS ARE COPLANAR WITHIN .004 INCHES.

Figure 65. 28-Pin SSOP Package Diagram

8KB Standard Temperature: 0° to +70°C			
Part Number	**Description**	**Part Number**	**Description**
ZGP323LSH4808C	48-pin SSOP 8K OTP	ZGP323LSS2808C	28-pin SOIC 8K OTP
ZGP323LSP4008C	40-pin PDIP 8K OTP	ZGP323LSH2008C	20-pin SSOP 8K OTP
ZGP323LSH2808C	28-pin SSOP 8K OTP	ZGP323LSP2008C	20-pin PDIP 8K OTP
ZGP323LSP2808C	28-pin PDIP 8K OTP	ZGP323LSS2008C	20-pin SOIC 8K OTP

8KB Extended Temperature: -40° to +105°C			
Part Number	**Description**	**Part Number**	**Description**
ZGP323LEH4808C	48-pin SSOP 8K OTP	ZGP323LES2808C	28-pin SOIC 8K OTP
ZGP323LEP4008C	40-pin PDIP 8K OTP	ZGP323LEH2008C	20-pin SSOP 8K OTP
ZGP323LEH2808C	28-pin SSOP 8K OTP	ZGP323LEP2008C	20-pin PDIP 8K OTP
ZGP323LEP2808C	28-pin PDIP 8K OTP	ZGP323LES2008C	20-pin SOIC 8K OTP

8KB Automotive Temperature: -40° to +125°C			
Part Number	**Description**	**Part Number**	**Description**
ZGP323LAH4808C	48-pin SSOP 8K OTP	ZGP323LAS2808C	28-pin SOIC 8K OTP
ZGP323LAP4008C	40-pin PDIP 8K OTP	ZGP323LAH2008C	20-pin SSOP 8K OTP
ZGP323LAH2808C	28-pin SSOP 8K OTP	ZGP323LAP2008C	20-pin PDIP 8K OTP
ZGP323LAP2808C	28-pin PDIP 8K OTP	ZGP323LAS2008C	20-pin SOIC 8K OTP

Note: Replace C with G for Lead-Free Packaging

  - T8 and T16 common control functions 65
  - T8/T16 control 68
  - TC16H(D)07h 30
  - TC16L(D)06h 31
  - TC8 control 64
  - TC8H(D)05h 31
  - TC8L(D)04h 31
  - voltage detection 69
  - watch-dog timer 73
- register description
  - Counter/Timer2 LS-Byte Hold 31
  - Counter/Timer2 MS-Byte Hold 30
  - Counter/Timer8 Control 31
  - Counter/Timer8 High Hold 31
  - Counter/Timer8 Low Hold 31
  - CTR2 Counter/Timer 16 Control 35
  - CTR3 T8/T16 Control 37
  - Stop Mode Recovery2 38
  - T16_Capture_LO 30
  - T8 and T16 Common functions 33
  - T8_Capture_HI 30
  - T8_Capture_LO 30
- register file 28
  - expanded 24
- register pointer 27
  - detail 29
- reset pin function 23
- resets and WDT 61

S

- SCLK circuit 56
- single-pass mode
  - T16_OUT 45
  - T8_OUT 41
- stack 29
- standard test conditions 10
- standby modes 1
- stop instruction, counter/timer 52
- stop mode recovery
  - 2 register 59
  - source 57
- stop mode recovery 2 59
- stop mode recovery register 55

T

- T16 transmit mode 44
- T16_Capture_HI 30
- T8 transmit mode 38
- T8_Capture_HI 30
- test conditions, standard 10
- test load diagram 10
- timing diagram, AC 14
- transmit mode flowchart 39

V

- VCC 5
- voltage
  - brown-out/standby 62
  - detection and flags 63
- voltage detection register 69

W

- watch-dog timer
  - mode registerwatch-dog timer mode register 60
  - time select 61

X

- XTAL1 5
- XTAL1 pin function 16
- XTAL2 5
- XTAL2 pin function 16