Welcome to E-XFL.COM

Understanding Embedded - FPGAs (Field Programmable Gate Array)

Embedded - FPGAs, or Field Programmable Gate Arrays, are advanced integrated circuits that offer unparalleled flexibility and performance for digital systems. Unlike traditional fixed-function logic devices, FPGAs can be programmed and reprogrammed to execute a wide array of logical operations, enabling customized functionality tailored to specific applications. This reprogrammability allows developers to iterate designs quickly and implement complex functions without the need for custom hardware.

Applications of Embedded - FPGAs

The versatility of Embedded - FPGAs makes them indispensable in numerous fields. In telecommunications.

Details	
Product Status	Active
Number of LABs/CLBs	1452
Number of Logic Elements/Cells	-
Total RAM Bits	-
Number of I/O	147
Number of Gates	24000
Voltage - Supply	3V ~ 3.6V, 4.75V ~ 5.25V
Mounting Type	Surface Mount
Operating Temperature	0°C ~ 70°C (TA)
Package / Case	176-LQFP
Supplier Device Package	176-TQFP (24x24)
Purchase URL	https://www.e-xfl.com/product-detail/microchip-technology/a54sx16p-tqg176

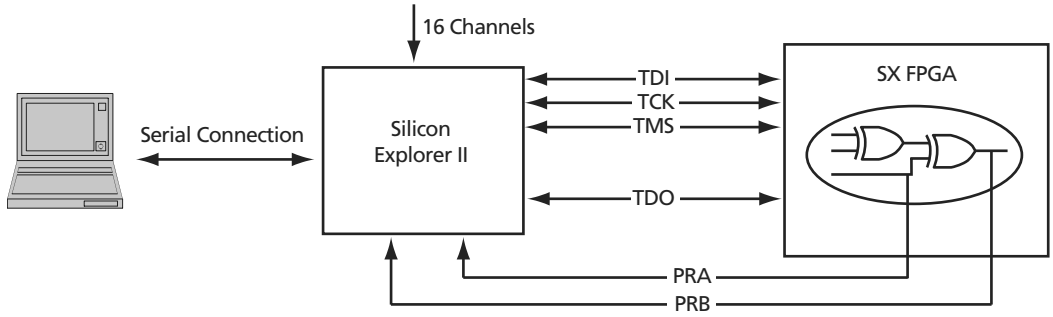

Figure 1-8 • **Probe Setup**

Programming

Device programming is supported through Silicon Sculptor series of programmers. In particular, Silicon Sculptor II are compact, robust, single-site and multi-site device programmer for the PC.

With standalone software, Silicon Sculptor II allows concurrent programming of multiple units from the same PC, ensuring the fastest programming times possible. Each fuse is subsequently verified by Silicon Sculptor II to insure correct programming. In addition, integrity tests ensure that no extra fuses are programmed. Silicon Sculptor II also provides extensive hardware self-testing capability.

The procedure for programming an SX device using Silicon Sculptor II are as follows:

1. Load the .AFM file
2. Select the device to be programmed
3. Begin programming

When the design is ready to go to production, Actel offers device volume-programming services either through distribution partners or via in-house programming from the factory.

For more details on programming SX devices, refer to the *Programming Antifuse Devices* application note and the *Silicon Sculptor II User's Guide*.

3.3 V / 5 V Operating Conditions

Table 1-3 • **Absolute Maximum Ratings[1]**

Symbol	Parameter	Limits	Units
V_{CCR}[2]	DC Supply Voltage[3]	–0.3 to + 6.0	V
V_{CCA}[2]	DC Supply Voltage	–0.3 to + 4.0	V
V_{CCI}[2]	DC Supply Voltage (A54SX08, A54SX16, A54SX32)	–0.3 to + 4.0	V
V_{CCI}[2]	DC Supply Voltage (A54SX16P)	–0.3 to + 6.0	V
V_I	Input Voltage	–0.5 to + 5.5	V
V_O	Output Voltage	–0.5 to + 3.6	V
I_{IO}	I/O Source Sink Current[3]	–30 to + 5.0	mA
T_{STG}	Storage Temperature	–65 to +150	°C

Notes:

1. *Stresses beyond those listed under "Absolute Maximum Ratings" may cause permanent damage to the device. Exposure to absolute maximum rated conditions for extended periods may affect device reliability. Device should not be operated outside the Recommended Operating Conditions.*
2. *V_{CCR} in the A54SX16P must be greater than or equal to V_{CCI} during power-up and power-down sequences and during normal operation.*
3. *Device inputs are normally high impedance and draw extremely low current. However, when input voltage is greater than V_{CC} + 0.5 V or less than GND – 0.5 V, the internal protection diodes will forward-bias and can draw excessive current.*

A54SX16P AC Specifications for (PCI Operation)

Table 1-7 • **A54SX16P AC Specifications for (PCI Operation)**

Symbol	Parameter	Condition	Min.	Max.	Units
$I_{OH(AC)}$	Switching Current High	$0 < V_{OUT} \le 1.4$[1]	–44		mA
		$1.4 \le V_{OUT} < 2.4$[1, 2]	$-44 + (V_{OUT} - 1.4)/0.024$		mA
		$3.1 < V_{OUT} < V_{CC}$[1, 3]		EQ 1-1 on page 1-11	
	(Test Point)	$V_{OUT} = 3.1$[3]		–142	mA
$I_{OL(AC)}$	Switching Current High	$V_{OUT} \ge 2.2$[1]	95		mA
		$2.2 > V_{OUT} > 0.55$[1]	$V_{OUT}/0.023$		
		$0.71 > V_{OUT} > 0$[1, 3]		EQ 1-2 on page 1-11	mA
	(Test Point)	$V_{OUT} = 0.71$[3]		206	mA
I_{CL}	Low Clamp Current	$-5 < V_{IN} \le -1$	$-25 + (V_{IN} + 1)/0.015$		mA
$slew_R$	Output Rise Slew Rate	0.4 V to 2.4 V load[4]	1	5	V/ns
$slew_F$	Output Fall Slew Rate	2.4 V to 0.4 V load[4]	1	5	V/ns

Notes:

1. *Refer to the V/I curves in Figure 1-9 on page 1-11. Switching current characteristics for REQ# and GNT# are permitted to be one half of that specified here; i.e., half-size output drivers may be used on these signals. This specification does not apply to CLK and RST#, which are system outputs. "Switching Current High" specifications are not relevant to SERR#, INTA#, INTB#, INTC#, and INTD#, which are open drain outputs.*
2. *Note that this segment of the minimum current curve is drawn from the AC drive point directly to the DC drive point rather than toward the voltage rail (as is done in the pull-down curve). This difference is intended to allow for an optional N-channel pull-up.*
3. *Maximum current requirements must be met as drivers pull beyond the last step voltage. Equations defining these maximums (A and B) are provided with the respective diagrams in Figure 1-9 on page 1-11. The equation defined maxima should be met by design. In order to facilitate component testing, a maximum current test point is defined for each side of the output driver.*
4. *This parameter is to be interpreted as the cumulative edge rate across the specified range, rather than the instantaneous rate at any point within the transition range. The specified load (diagram below) is optional; i.e., the designer may elect to meet this parameter with an unloaded output per revision 2.0 of the PCI Local Bus Specification. However, adherence to both maximum and minimum parameters is now required (the maximum is no longer simply a guideline). Since adherence to the maximum slew rate was not required prior to revision 2.1 of the specification, there may be components in the market for some time that have faster edge rates; therefore, motherboard designers must bear in mind that rise and fall times faster than this specification could occur, and should ensure that signal integrity modeling accounts for this. Rise slew rate does not apply to open drain outputs.*

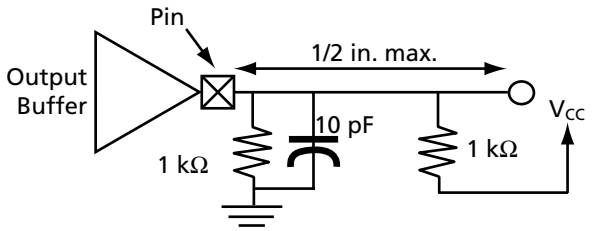

A54SX16P AC Specifications (3.3 V PCI Operation)

Table 1-9 • **A54SX16P AC Specifications (3.3 V PCI Operation)**

Symbol	Parameter	Condition	Min.	Max.	Units
$I_{OH(AC)}$	Switching Current High	$0 < V_{OUT} \le 0.3V_{CC}$[1]			mA
		$0.3V_{CC} \le V_{OUT} < 0.9V_{CC}$[1]	$-12V_{CC}$		mA
		$0.7V_{CC} < V_{OUT} < V_{CC}$[1, 2]	$-17.1 + (V_{CC} - V_{OUT})$	EQ 1-3 on page 1-14	
	(Test Point)	$V_{OUT} = 0.7V_{CC}$[2]		$-32V_{CC}$	mA
$I_{OL(AC)}$	Switching Current High	$V_{CC} > V_{OUT} \ge 0.6V_{CC}$[1]			mA
		$0.6V_{CC} > V_{OUT} > 0.1V_{CC}$[1]	$16V_{CC}$		mA
		$0.18V_{CC} > V_{OUT} > 0$[1, 2]	$26.7V_{OUT}$	EQ 1-4 on page 1-14	mA
	(Test Point)	$V_{OUT} = 0.18V_{CC}$[2]		$38V_{CC}$	
I_{CL}	Low Clamp Current	$-3 < V_{IN} \le -1$	$-25 + (V_{IN} + 1)/0.015$		mA
I_{CH}	High Clamp Current	$-3 < V_{IN} \le -1$	$25 + (V_{IN} - V_{OUT} - 1)/0.015$		mA
$slew_R$	Output Rise Slew Rate[3]	$0.2V_{CC}$ to $0.6V_{CC}$ load	1	4	V/ns
$slew_F$	Output Fall Slew Rate[3]	$0.6V_{CC}$ to $0.2V_{CC}$ load	1	4	V/ns

Notes:

1. *Refer to the V/I curves in Figure 1-10 on page 1-14. Switching current characteristics for REQ# and GNT# are permitted to be one half of that specified here; i.e., half size output drivers may be used on these signals. This specification does not apply to CLK and RST# which are system outputs. "Switching Current High" specification are not relevant to SERR#, INTA#, INTB#, INTC#, and INTD# which are open drain outputs.*
2. *Maximum current requirements must be met as drivers pull beyond the last step voltage. Equations defining these maximums (C and D) are provided with the respective diagrams in Figure 1-10 on page 1-14. The equation defined maxima should be met by design. In order to facilitate component testing, a maximum current test point is defined for each side of the output driver.*
3. *This parameter is to be interpreted as the cumulative edge rate across the specified range, rather than the instantaneous rate at any point within the transition range. The specified load (diagram below) is optional; i.e., the designer may elect to meet this parameter with an unloaded output per the latest revision of the PCI Local Bus Specification. However, adherence to both maximum and minimum parameters is required (the maximum is no longer simply a guideline). Rise slew rate does not apply to open drain outputs.*

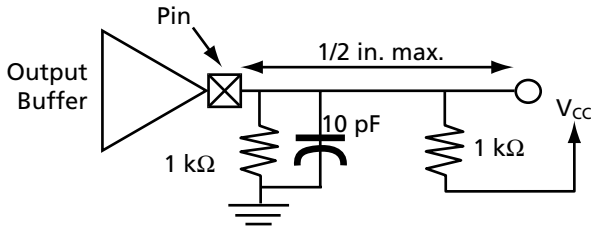

84-Pin PLCC	
Pin Number	**A54SX08 Function**
1	V_{CCR}
2	GND
3	V_{CCA}
4	PRA, I/O
5	I/O
6	I/O
7	V_{CCI}
8	I/O
9	I/O
10	I/O
11	TCK, I/O
12	TDI, I/O
13	I/O
14	I/O
15	I/O
16	TMS
17	I/O
18	I/O
19	I/O
20	I/O
21	I/O
22	I/O
23	I/O
24	I/O
25	I/O
26	I/O
27	GND
28	V_{CCI}
29	I/O
30	I/O
31	I/O
32	I/O
33	I/O
34	I/O
35	I/O

84-Pin PLCC	
Pin Number	**A54SX08 Function**
36	I/O
37	I/O
38	I/O
39	I/O
40	PRB, I/O
41	V_{CCA}
42	GND
43	V_{CCR}
44	I/O
45	HCLK
46	I/O
47	I/O
48	I/O
49	I/O
50	I/O
51	I/O
52	TDO, I/O
53	I/O
54	I/O
55	I/O
56	I/O
57	I/O
58	I/O
59	V_{CCA}
60	V_{CCI}
61	GND
62	I/O
63	I/O
64	I/O
65	I/O
66	I/O
67	I/O
68	V_{CCA}
69	GND
70	I/O

84-Pin PLCC	
Pin Number	**A54SX08 Function**
71	I/O
72	I/O
73	I/O
74	I/O
75	I/O
76	I/O
77	I/O
78	I/O
79	I/O
80	I/O
81	I/O
82	I/O
83	CLKA
84	CLKB

208-Pin PQFP

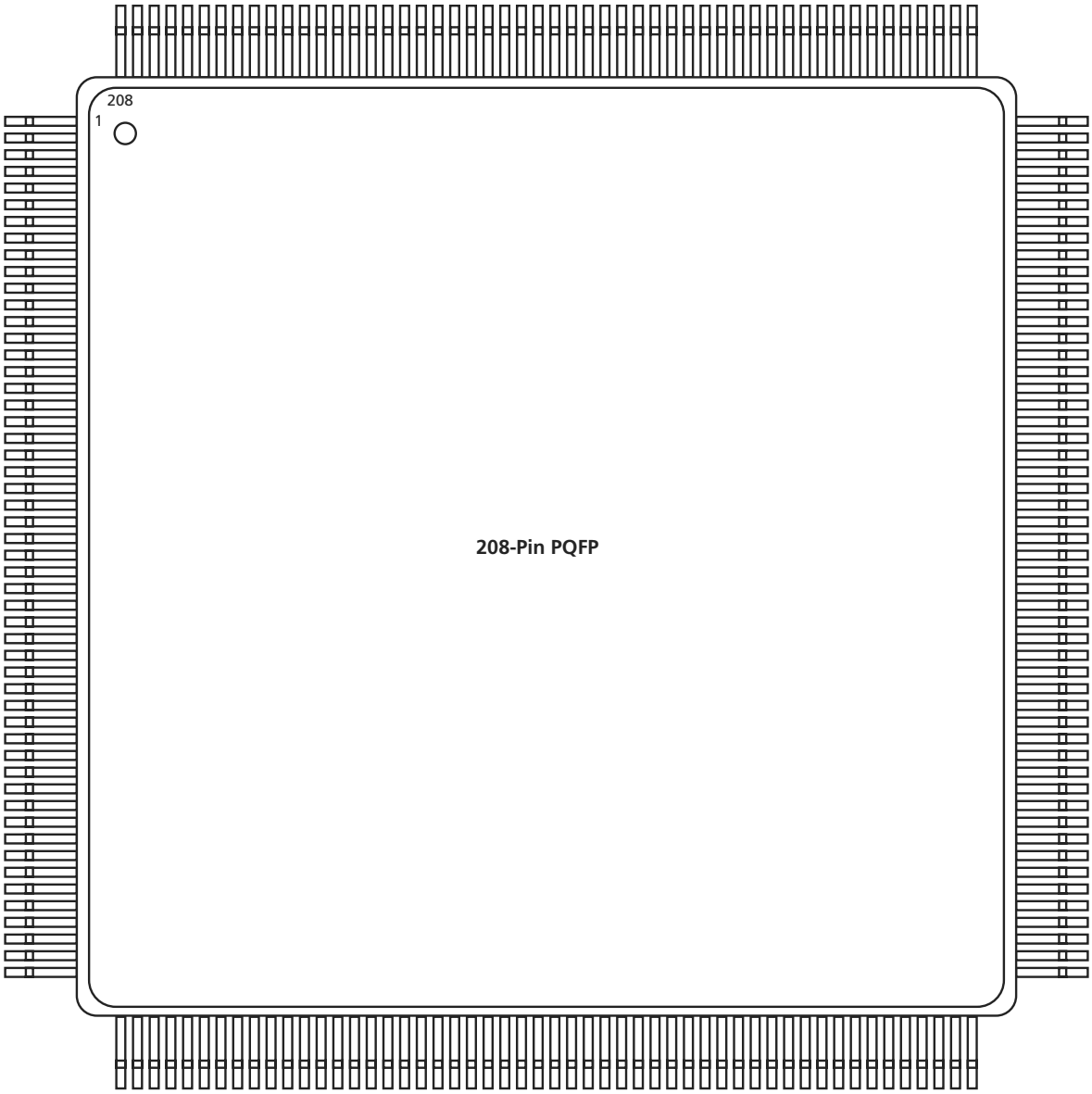

Figure 2-2 • **208-Pin PQFP (Top View)**

Note

For Package Manufacturing and Environmental information, visit the Package Resource center at http://www.actel.com/products/rescenter/package/index.html.

176-Pin TQFP			
Pin Number	A54SX08 Function	A54SX16, A54SX16P Function	A54SX32 Function
1	GND	GND	GND
2	TDI, I/O	TDI, I/O	TDI, I/O
3	NC	I/O	I/O
4	I/O	I/O	I/O
5	I/O	I/O	I/O
6	I/O	I/O	I/O
7	I/O	I/O	I/O
8	I/O	I/O	I/O
9	I/O	I/O	I/O
10	TMS	TMS	TMS
11	V_{CCI}	V_{CCI}	V_{CCI}
12	NC	I/O	I/O
13	I/O	I/O	I/O
14	I/O	I/O	I/O
15	I/O	I/O	I/O
16	I/O	I/O	I/O
17	I/O	I/O	I/O
18	I/O	I/O	I/O
19	I/O	I/O	I/O
20	I/O	I/O	I/O
21	GND	GND	GND
22	V_{CCA}	V_{CCA}	V_{CCA}
23	GND	GND	GND
24	I/O	I/O	I/O
25	I/O	I/O	I/O
26	I/O	I/O	I/O
27	I/O	I/O	I/O
28	I/O	I/O	I/O
29	I/O	I/O	I/O
30	I/O	I/O	I/O
31	I/O	I/O	I/O
32	V_{CCI}	V_{CCI}	V_{CCI}
33	V_{CCA}	V_{CCA}	V_{CCA}
34	I/O	I/O	I/O

176-Pin TQFP			
Pin Number	A54SX08 Function	A54SX16, A54SX16P Function	A54SX32 Function
35	I/O	I/O	I/O
36	I/O	I/O	I/O
37	I/O	I/O	I/O
38	I/O	I/O	I/O
39	I/O	I/O	I/O
40	NC	I/O	I/O
41	I/O	I/O	I/O
42	NC	I/O	I/O
43	I/O	I/O	I/O
44	GND	GND	GND
45	I/O	I/O	I/O
46	I/O	I/O	I/O
47	I/O	I/O	I/O
48	I/O	I/O	I/O
49	I/O	I/O	I/O
50	I/O	I/O	I/O
51	I/O	I/O	I/O
52	V_{CCI}	V_{CCI}	V_{CCI}
53	I/O	I/O	I/O
54	NC	I/O	I/O
55	I/O	I/O	I/O
56	I/O	I/O	I/O
57	NC	I/O	I/O
58	I/O	I/O	I/O
59	I/O	I/O	I/O
60	I/O	I/O	I/O
61	I/O	I/O	I/O
62	I/O	I/O	I/O
63	I/O	I/O	I/O
64	PRB, I/O	PRB, I/O	PRB, I/O
65	GND	GND	GND
66	V_{CCA}	V_{CCA}	V_{CCA}
67	V_{CCR}	V_{CCR}	V_{CCR}
68	I/O	I/O	I/O

176-Pin TQFP			
Pin Number	A54SX08 Function	A54SX16, A54SX16P Function	A54SX32 Function
69	HCLK	HCLK	HCLK
70	I/O	I/O	I/O
71	I/O	I/O	I/O
72	I/O	I/O	I/O
73	I/O	I/O	I/O
74	I/O	I/O	I/O
75	I/O	I/O	I/O
76	I/O	I/O	I/O
77	I/O	I/O	I/O
78	I/O	I/O	I/O
79	NC	I/O	I/O
80	I/O	I/O	I/O
81	NC	I/O	I/O
82	V_{CCI}	V_{CCI}	V_{CCI}
83	I/O	I/O	I/O
84	I/O	I/O	I/O
85	I/O	I/O	I/O
86	I/O	I/O	I/O
87	TDO, I/O	TDO, I/O	TDO, I/O
88	I/O	I/O	I/O
89	GND	GND	GND
90	NC	I/O	I/O
91	NC	I/O	I/O
92	I/O	I/O	I/O
93	I/O	I/O	I/O
94	I/O	I/O	I/O
95	I/O	I/O	I/O
96	I/O	I/O	I/O
97	I/O	I/O	I/O
98	V_{CCA}	V_{CCA}	V_{CCA}
99	V_{CCI}	V_{CCI}	V_{CCI}
100	I/O	I/O	I/O
101	I/O	I/O	I/O
102	I/O	I/O	I/O

176-Pin TQFP			
Pin Number	A54SX08 Function	A54SX16, A54SX16P Function	A54SX32 Function
103	I/O	I/O	I/O
104	I/O	I/O	I/O
105	I/O	I/O	I/O
106	I/O	I/O	I/O
107	I/O	I/O	I/O
108	GND	GND	GND
109	V_{CCA}	V_{CCA}	V_{CCA}
110	GND	GND	GND
111	I/O	I/O	I/O
112	I/O	I/O	I/O
113	I/O	I/O	I/O
114	I/O	I/O	I/O
115	I/O	I/O	I/O
116	I/O	I/O	I/O
117	I/O	I/O	I/O
118	NC	I/O	I/O
119	I/O	I/O	I/O
120	NC	I/O	I/O
121	NC	I/O	I/O
122	V_{CCA}	V_{CCA}	V_{CCA}
123	GND	GND	GND
124	V_{CCI}	V_{CCI}	V_{CCI}
125	I/O	I/O	I/O
126	I/O	I/O	I/O
127	I/O	I/O	I/O
128	I/O	I/O	I/O
129	I/O	I/O	I/O
130	I/O	I/O	I/O
131	NC	I/O	I/O
132	NC	I/O	I/O
133	GND	GND	GND
134	I/O	I/O	I/O
135	I/O	I/O	I/O
136	I/O	I/O	I/O

144-Pin FBGA

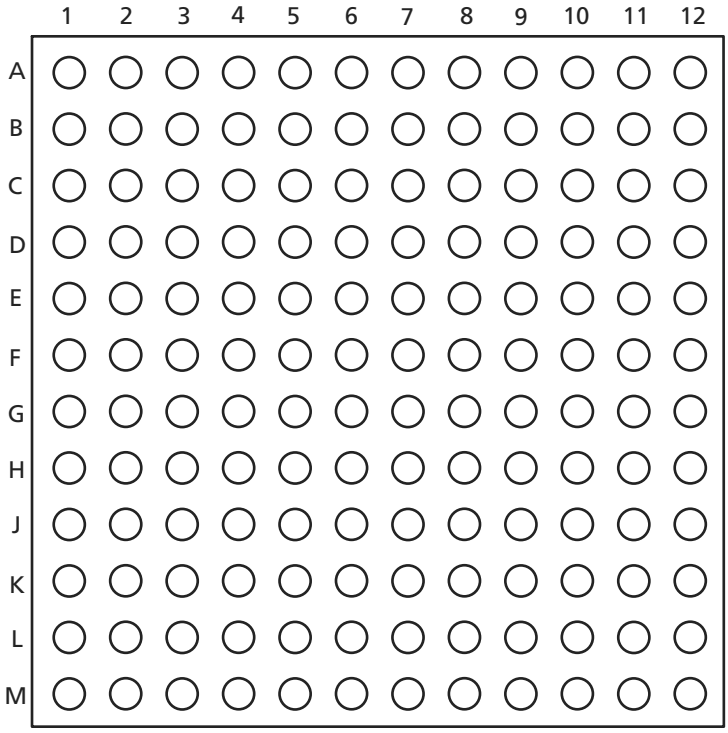

Figure 2-8 • **144-Pin FBGA (Top View)**

Note

For Package Manufacturing and Environmental information, visit the Package Resource center at http://www.actel.com/products/rescenter/package/index.html.

u e

SX Product Profile

Device	A54SX08	A54SX16	A54SX16P	A54SX32
Capacity				
Typical Gates	8,000	16,000	16,000	32,000
System Gates	12,000	24,000	24,000	48,000
Logic Modules	768	1,452	1,452	2,880
Combinatorial Cells	512	924	924	1,800
Register Cells (Ded				