Welcome to E-XFL.COM

What is "Embedded - Microcontrollers"?

"Embedded - Microcontrollers" refer to small, integrated circuits designed to perform specific tasks within larger systems. These microcontrollers are essentially compact computers on a single chip, containing a processor core, memory, and programmable input/output peripherals. They are called "embedded" because they are embedded within electronic devices to control various functions, rather than serving as standalone computers. Microcontrollers are crucial in modern electronics, providing the intelligence and control needed for a wide range of applications.

Applications of "Embedded - Microcontrollers"

Details	
Product Status	Active
Core Processor	PIC
Core Size	8-Bit
Speed	20MHz
Connectivity	-
Peripherals	Brown-out Detect/Reset, POR, PWM, WDT
Number of I/O	17
Program Memory Size	3.5KB (2K x 14)
Program Memory Type	FLASH
EEPROM Size	256 x 8
RAM Size	128 x 8
Voltage - Supply (Vcc/Vdd)	2V ~ 5.5V
Data Converters	A/D 14x10b
Oscillator Type	Internal
Operating Temperature	-40°C ~ 125°C (TA)
Mounting Type	Surface Mount
Package / Case	20-SSOP (0.209", 5.30mm Width)
Supplier Device Package	20-SSOP
Purchase URL	https://www.e-xfl.com/product-detail/microchip-technology/pic16f785t-e-ss

PIC16F785/HV785

20-Pin Flash-Based 8-Bit CMOS Microcontroller

High-Performance RISC CPU:

- Only 35 Instructions to Learn:
  - All single-cycle instructions except branches
- Operating Speed:
  - DC – 20 MHz oscillator/clock input
  - DC – 200 ns instruction cycle
- Interrupt Capability
- 8-Level Seep Hardware Stack
- Direct, Indirect and Relative Addressing modes

Special Microcontroller Features:

- Precision Internal Oscillator:
  - Factory calibrated to ±1%
  - Software selectable frequency range of 8 MHz to 32 kHz
  - Software tunable
  - Two-Speed Start-up mode
  - Crystal fail detect for critical applications
  - Clock mode switching during operation for power savings
- Power-Saving Sleep mode
- Wide Operating Voltage Range (2.0V-5.5V)
- Industrial and Extended Temperature Range
- Power-on Reset (POR)
- Power-up Timer (PWRT) and Oscillator Start-up Timer (OST)
- Brown-out Reset (BOR) with Software Control Option
- Enhanced Low-Current Watchdog Timer (WDT) with on-chip Oscillator (software selectable nominal 268 seconds with full prescaler) with Software Enable
- Multiplexed Master Clear with Pull-up/Input Pin
- Programmable Code Protection
- High-Endurance Flash/EEPROM cell:
  - 100,000 write Flash endurance
  - 1,000,000 write EEPROM endurance
  - Flash/Data EEPROM retention: > 40 years

Low-Power Features:

- Standby Current:
  - 30 nA @ 2.0V, typical
- Operating Current:
  - 8.5 μA @ 32 kHz, 2.0V, typical
  - 100 μA @ 1 MHz, 2.0V, typical
- Watchdog Timer Current:
  - 1 μA @ 2.0V, typical
- Timer1 Oscillator Current:
  - 2 μA @ 32 kHz, 2.0V, typical

Peripheral Features:

- High-Speed Comparator module with:
  - Two independent analog comparators
  - Programmable on-chip voltage reference (CV_{REF}) module (% of V_{DD})
  - 1.2V band gap voltage reference
  - Comparator inputs and outputs externally accessible
  - < 40 ns propagation delay
  - 2 mv offset, typical
- Operational Amplifier module with 2 independent Op Amps:
  - 3 MHz GBWP, typical
  - All I/O pins externally accessible
- Two-Phase Asynchronous Feedback PWM module:
  - Complementary output with programmable dead band delay
  - Infinite resolution analog duty cycle
  - Sync Output/Input for multi-phase PWM
  - F_{OSC}/2 maximum PWM frequency
- A/D Converter:
  - 10-bit resolution and 14 channels (2 internal)
- 17 I/O pins and 1 Input-only Pin:
  - High-current source/sink for direct LED drive
  - Interrupt-on-pin change
  - Individually programmable weak pull-ups
- Timer0: 8-Bit Timer/Counter with 8-Bit Programmable Prescaler
- Enhanced Timer1:
  - 16-bit timer/counter with prescaler
  - External Gate Input mode
  - Option to use OSC1 and OSC2 in LP mode as Timer1 oscillator, if INTOSC mode selected
- Timer2: 8-Bit Timer/Counter with 8-Bit Period Register, Prescaler and Postscaler
- Capture, Compare, PWM module:
  - 16-bit Capture, max resolution 12.5 ns
  - Compare, max resolution 200 ns
  - 10-bit PWM with 1 output channel, max frequency 20 kHz
- In-Circuit Serial Programming™ (ICSP™) via two pins
- Shunt Voltage Regulator (PIC16HV785 only):
  - 5 volt regulation
  - 4 mA to 50 mA shunt range

© 2008 Microchip Technology Inc.

1.0 DEVICE OVERVIEW

This document contains device specific information for the PIC16F785/HV785. It is available in 20-pin PDIP, SOIC, SSOP and QFN packages. Figure 1-1 shows a block diagram of the PIC16F785/HV785 device. Table 1-1 shows the pinout description.

FIGURE 1-1: PIC16F785/HV785 BLOCK DIAGRAM

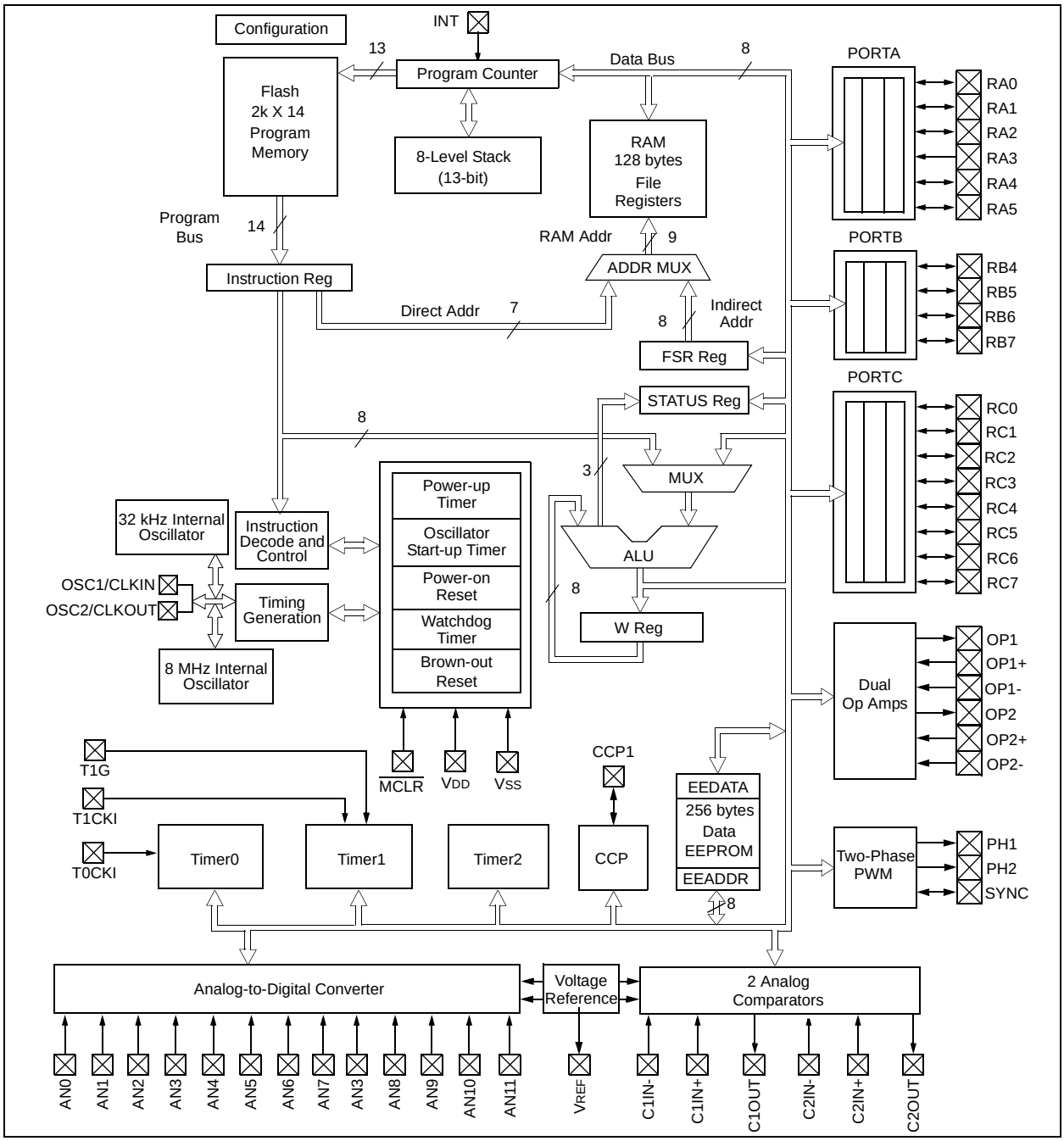

3.4.2.2 OSCTUNE Register

The HFINTOSC is factory calibrated but can be adjusted in software by writing to the OSCTUNE register (Register 3-1).

The OSCTUNE register has a nominal tuning range of ±12%. The default value of the OSCTUNE register is ‘0’. The value is a 5-bit two’s complement number. Due to process variation, the monotonicity and frequency step cannot be specified.

When the OSCTUNE register is modified, the HFINTOSC frequency will begin shifting to the new frequency. The HFINTOSC clock will stabilize within 1 ms. Code execution continues during this shift. There is no indication that the shift has occurred.

OSCTUNE does not affect the LFINTOSC frequency. Operation of features that depend on the LFINTOSC clock source frequency, such as the Power-up Timer (PWRT), Watchdog Timer (WDT), Fail-Safe Clock Monitor (FSCM) and peripherals, are *not* affected by the change in frequency.

REGISTER 3-1: OSCTUNE: OSCILLATOR TUNING REGISTER

U-0	U-0	U-0	R/W-0	R/W-0	R/W-0	R/W-0	R/W-0
—	—	—	TUN4	TUN3	TUN2	TUN1	TUN0
bit 7							bit 0

Legend:			
R = Readable bit	W = Writable bit	U = Unimplemented bit, read as ‘0’	
-n = Value at POR	‘1’ = Bit is set	‘0’ = Bit is cleared	x = Bit is unknown

bit 7-5 **Unimplemented:** Read as ‘0’

bit 4-0 **TUN<4:0>:** Frequency Tuning bits

01111 = Maximum frequency
01110 =
•
•
•
00001 =
00000 = Center frequency. Oscillator module is running at the calibrated frequency.
11111 =
•
•
•
10000 = Minimum frequency

© 2008 Microchip Technology Inc.

REGISTER 4-2: TRISA: PORTA TRI-STATE REGISTER

U-0	U-0	R/W-1	R/W-1	R-1	R/W-1	R/W-1	R/W-1
—	—	TRISA5(2)	TRISA4(2)	TRISA3(1)	TRISA2	TRISA1	TRISA0
bit 7							bit 0

Legend:			
R = Readable bit	W = Writable bit	U = Unimplemented bit, read as ‘0’	
-n = Value at POR	‘1’ = Bit is set	‘0’ = Bit is cleared	x = Bit is unknown

bit 7-6 **Unimplemented:** Read as ‘0’

bit 5-0 **TRISA<5:0>:** PORTA Tri-State Control bit(1), (2)
1 = PORTA pin configured as an input (tri-stated)
0 = PORTA pin configured as an output

bit 0 **C:** Carry/$\overline{\text{Borrow}}$ bit (ADDWF, ADDLW, SUBLW, SUBWF instructions)(1)
1 = A carry-out from the Most Significant bit of the result occurred
0 = No carry-out from the Most Significant bit of the result occurred

Note 1: TRISA<3> always reads ‘1’.

2: TRISA<5:4> always reads ‘1’ in XT, HS and LP OSC modes.

4.2 Additional Pin Functions

Every PORTA pin on the PIC16F785/HV785 has an interrupt-on-change option and a weak pull-up option. The next three sections describe these functions.

4.2.1 WEAK PULL-UPS

Each of the PORTA pins has an individually configurable internal weak pull-up. Control bits WPUAx enable or disable each pull-up. Refer to Register 4-3. Each weak pull-up is automatically turned off when the port pin is configured as an output. The pull-ups are disabled on a Power-on Reset by the $\overline{\text{RAPU}}$ bit in the (OPTION Register. The weak pull-up on RA3 is automatically enabled when RA3 is configured as $\overline{\text{MCLR}}$.

REGISTER 4-3: WPUA: WEAK PULL-UP REGISTER

U-0	U-0	R/W-1	R/W-1	R/W-1	R/W-1	R/W-1	R/W-1
—	—	WPUA5(4)	WPUA4(4)	WPUA3(3)	WPUA2	WPUA1	WPUA0
bit 7							bit 0

Legend:			
R = Readable bit	W = Writable bit	U = Unimplemented bit, read as ‘0’	
-n = Value at POR	‘1’ = Bit is set	‘0’ = Bit is cleared	x = Bit is unknown

bit 7-6 **Unimplemented:** Read as ‘0’

bit 5-0 **WPUA<5:0>:** Weak Pull-up Register bits
1 = Pull-up enabled
0 = Pull-up disabled

Note 1: Global $\overline{\text{RAPU}}$ must be enabled for individual pull-ups to be enabled.

2: The weak pull-up device is automatically disabled if the pin is in Output mode (TRISA = 0).

3: The RA3 pull-up is automatically enabled when configured as $\overline{\text{MCLR}}$ in the Configuration Word.

4: WPUA<5:4> always reads ‘1’ in XT, HS and LP OSC modes.

© 2008 Microchip Technology Inc.

6.1 Timer1 Modes of Operation

Timer1 can operate in one of three modes:

- 16-bit Timer with prescaler
- 16-bit Synchronous counter
- 16-bit Asynchronous counter

In Timer mode, Timer1 is incremented on every instruction cycle. In Counter mode, Timer1 is incremented on the rising edge of the external clock input T1CKI. In addition, the Counter mode clock can be synchronized to the microcontroller system clock or run asynchronously.

In Counter and Timer modules, the counter/timer clock can be gated by the Timer1 gate, which can be selected as either the T1G pin or Comparator 2 output.

If an external clock oscillator is needed (and the microcontroller is using the LP oscillator or INTOSC without CLKOUT), Timer1 can use the LP oscillator as a clock source.

Note: In Counter mode, a falling edge must be registered by the counter prior to the first incrementing rising edge after any one or more of the following conditions.

- Timer1 enabled after POR Reset
- Write to TMR1H or TMR1L
- Timer1 is disabled (TMR1ON = 0) when T1CKI is high then Timer1 is enabled (TMR1ON = 1) when T1CKI is low. See Figure 6-2.

6.2 Timer1 Interrupt

The Timer1 register pair (TMR1H:TMR1L) increments to FFFFh and rolls over to 0000h. When Timer1 rolls over, the Timer1 interrupt flag bit of the PIR1 Register is set. To enable the interrupt on rollover, you must set these bits:

- Timer1 Interrupt Enable bit of the PIE1 Register
- PEIE bit of the INTCON Register
- GIE bit of the INTCON Register

The interrupt is cleared by clearing the TMR1IF in the Interrupt Service Routine.

Note: The TMR1H:TMR1L register pair and the TMR1IF bit should be cleared before enabling interrupts.

6.3 Timer1 Prescaler

Timer1 has four prescaler options allowing 1, 2, 4 or 8 divisions of the clock input. The T1CKPS bits, of the T1CON Register, control the prescale counter. The prescale counter is not directly readable or writable; however, the prescaler counter is cleared upon a write to TMR1H or TMR1L.

6.4 Timer1 Gate

Timer1 gate source is software configurable to be T1G pin or the output of Comparator 2. This allows the device to directly time external events using T1G or analog events using Comparator 2. See CM2CON1 (Register 9-3) for selecting the Timer1 gate source. This feature can simplify the software for a Delta-Sigma A/D Converter and many other applications. For more information on Delta-Sigma A/D Converters, see the Microchip web site (www.microchip.com).

Note: TMR1GE bit, of the T1CON Register, must be set to use either T1G or C2OUT as the Timer1 gate source. See Register 9-3 for more information on selecting the Timer1 gate source.

Timer1 gate can be inverted using the T1GINV bit of the T1CON Register, whether it originates from the T1G pin or Comparator 2 output. This configures Timer1 to measure either the active high or active low time between events.

FIGURE 6-2: TIMER1 INCREMENTING EDGE

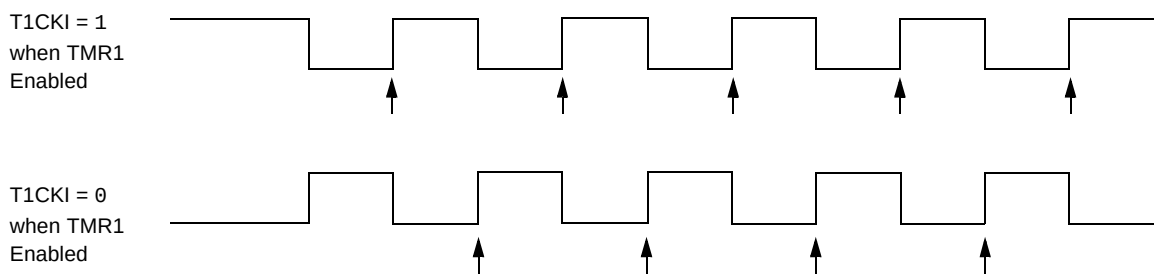

Note 1: Arrows indicate counter increments.
2: See note box in **Section 6.1 "Timer1 Modes of Operation"**.

© 2008 Microchip Technology Inc.

9.1.2 COMPARATOR C2 CONTROL REGISTERS

The CM2CON0 register is a functional copy of the CM1CON0 register described in **Section 9.1.1 "Comparator C1 Control Register"**. A second control register, CM2CON1, is also present for control of an additional synchronizing feature, as well as mirrors of both comparator outputs.

9.1.2.1 Control Register CM2CON0

The CM2CON0 register, shown in Register 9-2, contains the control and Status bits for Comparator C2.

Setting C2ON of the CM2CON0 Register enables Comparator C2 for operation.

Bits C2CH<1:0> of the CM2CON0 Register select the comparator input from the four analog pins, AN<7:5,1>.

Note:	To use AN<7:5,1> as analog inputs, the appropriate bits must be programmed to 1 in the ANSEL0 register.

C2R of the CM2CON0 Register selects the reference to be used with the comparator. Setting C2R of the CM2CON0 Register selects the C2VREF output of the comparator voltage reference module as the reference voltage for the comparator. Clearing C2R selects the C2IN+ input on the RC0/AN4/C2IN+ pin.

The output of the comparator is available internally via the C2OUT bit of the CM2CON0 Register. To make the output available for an external connection, the C2OE bit of the CM2CON0 Register must be set.

The comparator output, C2OUT, can be inverted by setting the C2POL bit of the CM2CON0 Register. Clearing C2POL results in a non-inverted output.

A complete table showing the output state versus input conditions and the polarity bit is shown in Table 9-2.

TABLE 9-2: C2 OUTPUT STATE VERSUS INPUT CONDITIONS

Input Condition	C2POL	C2OUT
C2VN > C2VP	0	0
C2VN < C2VP	0	1
C2VN > C2VP	1	1
C2VN < C2VP	1	0

Note 1:	The internal output of the comparator is latched at the end of each instruction cycle. External outputs are not latched.
2:	The C2 interrupt will operate correctly with C2OE set or cleared. An external output is not required for the C2 interrupt.
3:	For C2 output on RC4/C2OUT/PH2: (C2OE = 1) and (C2ON = 1) and (TRISA<4> = 0).

C2SP of the CM2CON0 Register configures the speed of the comparator. When C2SP is set, the comparator operates at its normal speed. Clearing C2SP operates the comparator in low-power mode.

FIGURE 9-2: COMPARATOR C2 SIMPLIFIED BLOCK DIAGRAM

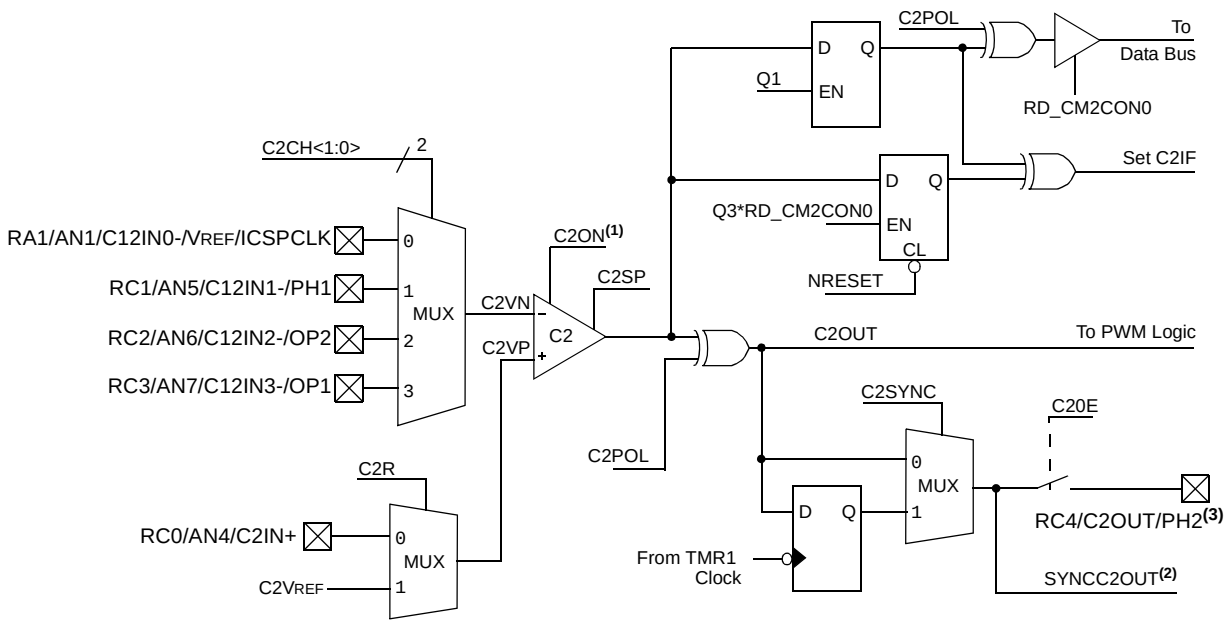

Note 1: When C2ON = 0, the C2 comparator will produce a '0' output to the XOR Gate.
2: Timer1 gate control (see Figure 6-1).
3: Output shown for reference only. For more detail, see Figure 4-13.

© 2008 Microchip Technology Inc.

REGISTER 11-1: OPA1CON: OP AMP 1 CONTROL REGISTER

R/W-0	U-0	U-0	U-0	U-0	U-0	U-0	U-0
OPAON	—	—	—	—	—	—	—
bit 7							bit 0

Legend:			
R = Readable bit	W = Writable bit	U = Unimplemented bit, read as ‘0’	
-n = Value at POR	‘1’ = Bit is set	‘0’ = Bit is cleared	x = Bit is unknown

bit 7 **OPAON:** Op Amp Enable bit
`1` = Op Amp 1 is enabled
`0` = Op Amp 1 is disabled

bit 6-0 **Unimplemented:** Read as ‘`0`’

REGISTER 11-2: OPA2CON: OP AMP 2 CONTROL REGISTER

R/W-0	U-0	U-0	U-0	U-0	U-0	U-0	U-0
OPAON	—	—	—	—	—	—	—
bit 7							bit 0

Legend:			
R = Readable bit	W = Writable bit	U = Unimplemented bit, read as ‘0’	
-n = Value at POR	‘1’ = Bit is set	‘0’ = Bit is cleared	x = Bit is unknown

bit 7 **OPAON:** Op Amp Enable bit
`1` = Op Amp 2 is enabled
`0` = Op Amp 2 is disabled

bit 6-0 **Unimplemented:** Read as ‘`0`’

© 2008 Microchip Technology Inc.

12.1.5 STARTING A CONVERSION

The A/D conversion is initiated by setting the GO/$\overline{\text{DONE}}$ bit (ADCON0<1>). When the conversion is complete, the A/D module:

- Clears the GO/$\overline{\text{DONE}}$ bit
- Sets the ADIF flag (PIR1<6>)
- Generates an interrupt (if enabled)

If the conversion must be aborted, the GO/$\overline{\text{DONE}}$ bit can be cleared in software. The ADRESH:ADRESL registers will not be updated with the partially complete A/D conversion sample. Instead, the ADRESH:ADRESL registers will retain the value of the previous conversion. After an aborted conversion, a 2 TAD delay is required before another acquisition can be initiated. Following the delay, an input acquisition is automatically started on the selected channel.

Note:	The GO/$\overline{\text{DONE}}$ bit should not be set in the same instruction that turns on the A/D.

FIGURE 12-2: A/D CONVERSION TAD CYCLES

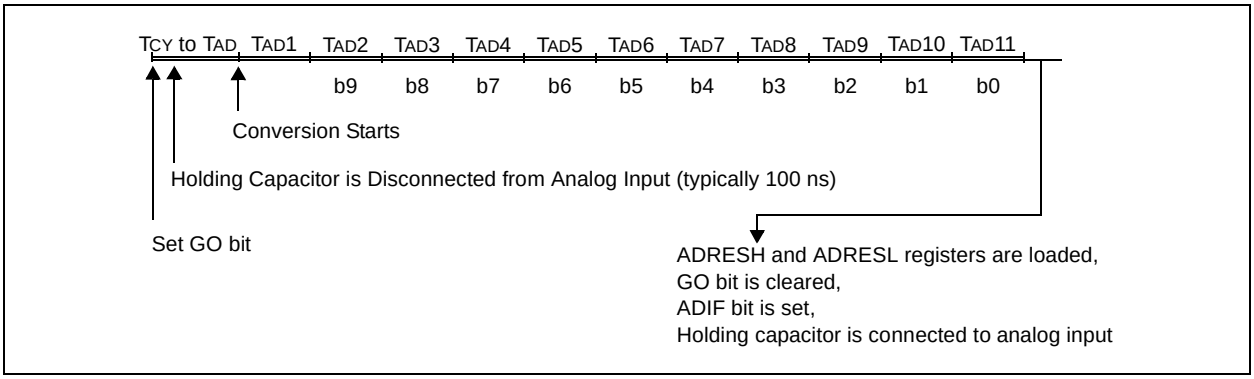

12.1.6 CONVERSION OUTPUT

The A/D conversion can be supplied in two formats: left or right justified. The ADFM bit of the ADCON0 register controls the output format. Figure 12-3 shows the output formats.

FIGURE 12-3: 10-BIT A/D RESULT FORMAT

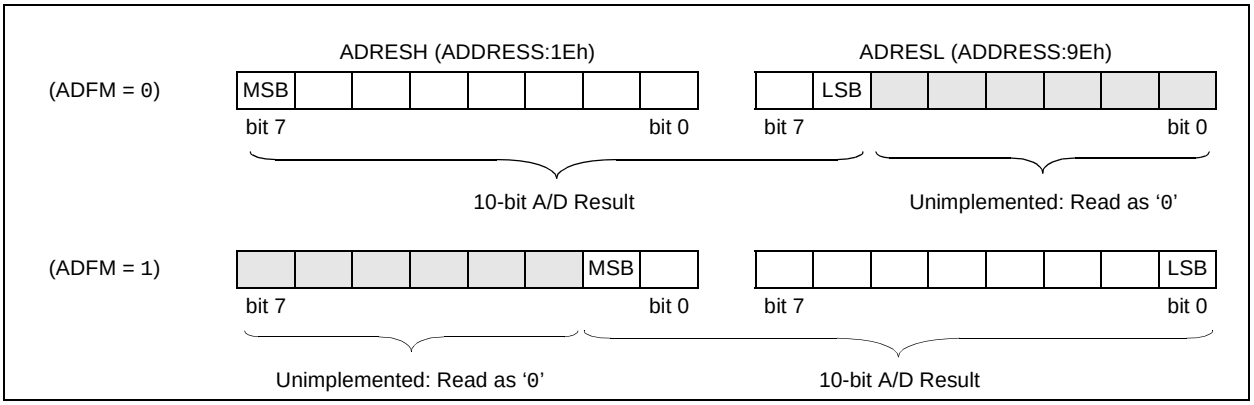

REGISTER 12-3: ADCON0: A/D CONTROL REGISTER

R/W-0	R/W-0	R/W-0	R/W-0	R/W-0	R/W-0	R/W-0	R/W-0
ADFM	VCFG	CHS3	CHS2	CHS1	CHS0	GO/$\overline{\text{DONE}}$	ADON
bit 7							bit 0

Legend:			
R = Readable bit	W = Writable bit	U = Unimplemented bit, read as ‘0’	
-n = Value at POR	‘1’ = Bit is set	‘0’ = Bit is cleared	x = Bit is unknown

bit 7 **ADFM:** A/D Result Formed Select bit
1 = Right justified
0 = Left justified

bit 6 **VCFG**: Voltage Reference bit
1 = V_{REF} pin
0 = V_{DD}

bit 5-2 **CHS<3:0>:** Analog Channel Select bits
0000 = Channel 00 (AN0)
0001 = Channel 01 (AN1)
0010 = Channel 02 (AN2)
0011 = Channel 03 (AN3)
0100 = Channel 04 (AN4)
0101 = Channel 05 (AN5)
0110 = Channel 06 (AN6)
0111 = Channel 07 (AN7)
1000 = Channel 08 (AN8)
1001 = Channel 09 (AN9)
1010 = Channel 10 (AN10)
1011 = Channel 11 (AN11)
1100 = CV_{REF}
1101 = VR
1110 = Reserved. Do not use.
1111 = Reserved. Do not use.

bit 1 **GO/$\overline{\text{DONE}}$:** A/D Conversion Status bit
1 = A/D conversion cycle in progress. Setting this bit starts an A/D conversion cycle.
This bit is automatically cleared by hardware when the A/D conversion has completed.
0 = A/D conversion completed/not in progress

bit 0 **ADON:** A/D Enable bit
1 = A/D converter module is enabled
0 = A/D converter is shut-off and consumes no operating current

12.4 Effects of Reset

A device Reset forces all registers to their Reset state. Thus, the A/D module is turned off and any pending conversion is aborted. The ADRESH:ADRESL registers are unchanged.

12.5 Use of the CCP Trigger

An A/D conversion can be started by the "special event trigger" of the CCP module. This requires that the CCP1M3:CCP1M0 bits of the CCP1CON Register be programmed as '1011' and that the A/D module is enabled (ADON bit is set). When the trigger occurs, the GO/$\overline{\text{DONE}}$ bit will be set, starting the A/D conversion and the Timer1 counter will be reset to zero. Timer1 is reset to automatically repeat the A/D acquisition period with minimal software overhead (moving the ADRESH:ADRESL to the desired location).

The appropriate analog input channel must be selected and the minimum acquisition done before the "special event trigger" sets the GO/$\overline{\text{DONE}}$ bit (starts a conversion).

If the A/D module is not enabled (ADON is cleared), then the "special event trigger" will be ignored by the A/D module, but will still reset the Timer1 counter. See **Section 8.0 "Capture/Compare/PWM (CCP) Module"** for more information.

TABLE 12-3: SUMMARY OF A/D REGISTERS

Name	Bit 7	Bit 6	Bit 5	Bit 4	Bit 3	Bit 2	Bit 1	Bit 0	Value on POR, BOR	Value on all other Resets
ADCON0	ADFM	VCFG	CHS3	CHS2	CHS1	CHS0	GO/$\overline{\text{DONE}}$	ADON	0000 0000	0000 0000
ADCON1	—	ADCS2	ADCS1	ADCS0	—	—	—	—	-000 ----	-000 ----
ADRESH	Most Significant 8 bits of the left justified A/D result or 2 bits of the right justified result								xxxx xxxx	uuuu uuuu
ADRESL	Least Significant 2 bits of the left justified A/D result or 8 bits of the right justified result								xxxx xxxx	uuuu uuuu
ANSEL0	ANS7	ANS6	ANS5	ANS4	ANS3	ANS2	ANS1	ANS0	1111 1111	1111 1111
ANSEL1	—	—	—	—	ANS11	ANS10	ANS9	ANS8	---- 1111	---- 1111
INTCON	GIE	PEIE	T0IE	INTE	RAIE	T0IF	INTF	RAIF	0000 0000	0000 0000
PIE1	EEIE	ADIE	CCP1IE	C2IE	C1IE	OSFIE	TMR2IE	TMR1IE	0000 0000	0000 0000
PIR1	EEIF	ADIF	CCP1IF	C2IF	C1IF	OSFIF	TMR2IF	TMR1IF	0000 0000	0000 0000
PORTA	—	—	RA5	RA4	RA3	RA2	RA1	RA0	--xx xxxx	--uu uuuu
PORTB	RB7	RB6	RB5	RB4	—	—	—	—	xxxx ----	uuuu ----
PORTC	RC7	RC6	RC5	RC4	RC3	RC2	RC1	RC0	xxxx xxxx	uuuu uuuu
TRISA	—	—	TRISA5	TRISA4	TRISA3	TRISA2	TRISA1	TRISA0	--11 1111	--11 1111
TRISB	TRISB7	TRISB6	TRISB5	TRISB4	—	—	—	—	1111 ----	1111 ----
TRISC	TRISC7	TRISC6	TRISC5	TRISC4	TRISC3	TRISC2	TRISC1	TRISC0	1111 1111	1111 1111

Legend: x = unknown, u = unchanged, – = unimplemented read as '0'. Shaded cells are not used for A/D module.

TABLE 15-5: INITIALIZATION CONDITION FOR SPECIAL REGISTERS

Condition	Program Counter	STATUS Register	PCON Register
Power-on Reset	000h	0001 1xxx	---1 --0x
$\overline{\text{MCLR}}$ Reset during normal operation	000h	000u uuuu	---u --uu
$\overline{\text{MCLR}}$ Reset during Sleep	000h	0001 0uuu	---u --uu
WDT Reset	000h	0000 uuuu	---u --uu
WDT Wake-up	PC + 1	uuu0 0uuu	---u --uu
Brown-out Reset	000h	0001 1uuu	---1 --u0
Interrupt Wake-up from Sleep	PC + 1(1)	uuu1 0uuu	---u --uu

Legend: u = unchanged, x = unknown, – = unimplemented bit, reads as '0'.

Note 1: When the wake-up is due to an interrupt and global enable bit GIE is set, the PC is loaded with the interrupt vector (0004h) after execution of PC + 1.

© 2008 Microchip Technology Inc.

15.3.1 RA2/AN2/T0CKI/INT/C1OUT INTERRUPT

External interrupt on RA2/AN2/T0CKI/INT/C1OUT pin is edge-triggered; either rising, if INTEDG bit of the OPTION Register is set, or falling, if INTEDG bit is clear. When a valid edge appears on the RA2/AN2/T0CKI/INT/C1OUT pin, the INTF bit of the INTCON Register is set. This interrupt can be disabled by clearing the INTE control bit of the INTCON Register. The INTF bit must be cleared in software in the Interrupt Service Routine before re-enabling this interrupt. The RA2/AN2/T0CKI/INT/C1OUT interrupt can wake-up the processor from Sleep if the INTE bit was set prior to going into Sleep. The status of the GIE bit decides whether or not the processor branches to the interrupt vector following wake-up (0004h). See **Section 15.6 "Power-Down Mode (Sleep)"** for details on Sleep and Figure 15-10 for timing of wake-up from Sleep through RA2/AN2/T0CKI/INT/C1OUT interrupt.

Note:	The ANSEL0 (91h), and ANSEL1 (93h) registers must be initialized to configure an analog channel as a digital input. Pins configured as analog inputs will read '0'.

15.3.2 TMR0 INTERRUPT

An overflow (FFh → 00h) in the TMR0 register will set the T0IF bit of the INTCON Register. The interrupt can be enabled/disabled by setting/clearing T0IE bit of the INTCON Register. See **Section 5.0 "Timer0 Module"** for operation of the Timer0 module.

15.3.3 PORTA INTERRUPT

An input change on PORTA change sets the RAIF of the INTCON Register bit. The interrupt can be enabled/disabled by setting/clearing the RAIE bit of the INTCON Register. Plus, individual pins can be configured through the IOCA register.

Note:	If a change on the I/O pin should occur when the read operation is being executed (start of the Q2 cycle), then the RAIF interrupt flag may not get set.

FIGURE 15-7: INTERRUPT LOGIC

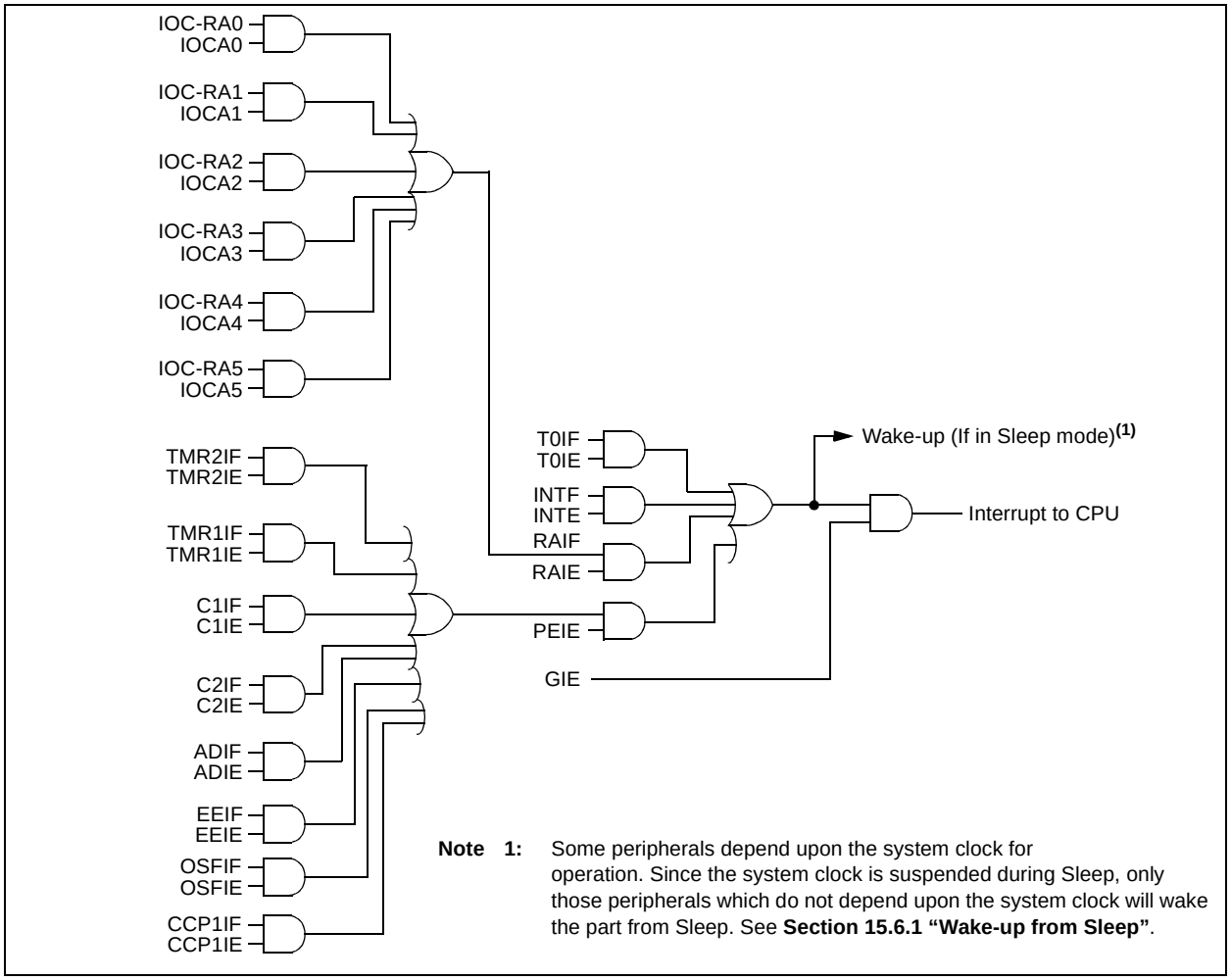

© 2008 Microchip Technology Inc.

TABLE 17-2: PIC16F785/HV785 INSTRUCTION SET

Mnemonic, Operands		Description	Cycles	14-Bit Opcode MSb			LSb	Status Affected	Notes
BYTE-ORIENTED FILE REGISTER OPERATIONS									
ADDWF	f, d	Add W and f	1	00	0111	dfff	ffff	C,DC,Z	**1,2**
ANDWF	f, d	AND W with f	1	00	0101	dfff	ffff	Z	**1,2**
CLRF	f	Clear f	1	00	0001	lfff	ffff	Z	**2**
CLRW	–	Clear W	1	00	0001	0xxx	xxxx	Z	
COMF	f, d	Complement f	1	00	1001	dfff	ffff	Z	**1,2**
DECF	f, d	Decrement f	1	00	0011	dfff	ffff	Z	**1,2**
DECFSZ	f, d	Decrement f, Skip if 0	1**(2)**	00	1011	dfff	ffff		**1,2,3**
INCF	f, d	Increment f	1	00	1010	dfff	ffff	Z	**1,2**
INCFSZ	f, d	Increment f, Skip if 0	1**(2)**	00	1111	dfff	ffff		**1,2,3**
IORWF	f, d	Inclusive OR W with f	1	00	0100	dfff	ffff	Z	**1,2**
MOVF	f, d	Move f	1	00	1000	dfff	ffff	Z	**1,2**
MOVWF	f	Move W to f	1	00	0000	lfff	ffff		
NOP	–	No Operation	1	00	0000	0xx0	0000		
RLF	f, d	Rotate Left f through Carry	1	00	1101	dfff	ffff	C	**1,2**
RRF	f, d	Rotate Right f through Carry	1	00	1100	dfff	ffff	C	**1,2**
SUBWF	f, d	Subtract W from f	1	00	0010	dfff	ffff	C,DC,Z	**1,2**
SWAPF	f, d	Swap nibbles in f	1	00	1110	dfff	ffff		**1,2**
XORWF	f, d	Exclusive OR W with f	1	00	0110	dfff	ffff	Z	**1,2**
BIT-ORIENTED FILE REGISTER OPERATIONS									
BCF	f, b	Bit Clear f	1	01	00bb	bfff	ffff		**1,2**
BSF	f, b	Bit Set f	1	01	01bb	bfff	ffff		**1,2**
BTFSC	f, b	Bit Test f, Skip if Clear	1 **(2)**	01	10bb	bfff	ffff		**3**
BTFSS	f, b	Bit Test f, Skip if Set	1 **(2)**	01	11bb	bfff	ffff		**3**
LITERAL AND CONTROL OPERATIONS									
ADDLW	k	Add literal and W	1	11	111x	kkkk	kkkk	C,DC,Z	
ANDLW	k	AND literal with W	1	11	1001	kkkk	kkkk	Z	
CALL	k	Call subroutine	2	10	0kkk	kkkk	kkkk		
CLRWDT	–	Clear Watchdog Timer	1	00	0000	0110	0100	$\overline{TO}$,$\overline{PD}$	
GOTO	k	Go to address	2	10	1kkk	kkkk	kkkk		
IORLW	k	Inclusive OR literal with W	1	11	1000	kkkk	kkkk	Z	
MOVLW	k	Move literal to W	1	11	00xx	kkkk	kkkk		
RETFIE	–	Return from interrupt	2	00	0000	0000	1001		
RETLW	k	Return with literal in W	2	11	01xx	kkkk	kkkk		
RETURN	–	Return from Subroutine	2	00	0000	0000	1000		
SLEEP	–	Go into Standby mode	1	00	0000	0110	0011	$\overline{TO}$,$\overline{PD}$	
SUBLW	k	Subtract W from literal	1	11	110x	kkkk	kkkk	C,DC,Z	
XORLW	k	Exclusive OR literal with W	1	11	1010	kkkk	kkkk	Z	

Note 1: When an I/O register is modified as a function of itself (e.g., `MOVF PORTA, 1`), the value used will be that value present on the pins themselves. For example, if the data latch is '1' for a pin configured as input and is driven low by an external device, the data will be written back with a '0'.

2: If this instruction is executed on the TMR0 register (and, where applicable, d = 1), the prescaler will be cleared if assigned to the Timer0 module.

3: If Program Counter (PC) is modified, or a conditional test is true, the instruction requires two cycles. The second cycle is executed as a NOP.

© 2008 Microchip Technology Inc.

COMF	Complement f
Syntax:	[*label*] COMF f,d
Operands:	$0 \le f \le 127$ $d \in [0,1]$
Operation:	$(\bar{f}) \rightarrow$ (destination)
Status Affected:	Z
Description:	The contents of register ‘f’ are complemented. If ‘d’ is ‘0’, the result is stored in W. If ‘d’ is ‘1’, the result is stored back in register ‘f’.

DECF	Decrement f
Syntax:	[*label*] DECF f,d
Operands:	$0 \le f \le 127$ $d \in [0,1]$
Operation:	(f) - 1 $\rightarrow$ (destination)
Status Affected:	Z
Description:	Decrement register ‘f’. If ‘d’ is ‘0’, the result is stored in the W register. If ‘d’ is ‘1’, the result is stored back in register ‘f’.

DECFSZ	Decrement f, Skip if 0
Syntax:	[*label*] DECFSZ f,d
Operands:	$0 \le f \le 127$ $d \in [0,1]$
Operation:	(f) - 1 $\rightarrow$ (destination); skip if result = 0
Status Affected:	None
Description:	The contents of register ‘f’ are decremented. If ‘d’ is ‘0’, the result is placed in the W register. If ‘d’ is ‘1’, the result is placed back in register ‘f’. If the result is ‘1’, the next instruction is executed. If the result is ‘0’, then a NOP is executed instead, making it a two-cycle instruction.

GOTO	Unconditional Branch
Syntax:	[*label*] GOTO k
Operands:	$0 \le k \le 2047$
Operation:	k $\rightarrow$ PC<10:0> PCLATH<4:3> $\rightarrow$ PC<12:11>
Status Affected:	None
Description:	GOTO is an unconditional branch. The eleven-bit immediate value is loaded into PC bits <10:0>. The upper bits of PC are loaded from PCLATH<4:3>. GOTO is a two-cycle instruction.

INCF	Increment f
Syntax:	[*label*] INCF f,d
Operands:	$0 \le f \le 127$ $d \in [0,1]$
Operation:	(f) + 1 $\rightarrow$ (destination)
Status Affected:	Z
Description:	The contents of register ‘f’ are incremented. If ‘d’ is ‘0’, the result is placed in the W register. If ‘d’ is ‘1’, the result is placed back in register ‘f’.

INCFSZ	Increment f, Skip if 0
Syntax:	[*label*] INCFSZ f,d
Operands:	$0 \le f \le 127$ $d \in [0,1]$
Operation:	(f) + 1 $\rightarrow$ (destination), skip if result = 0
Status Affected:	None
Description:	The contents of register ‘f’ are incremented. If ‘d’ is ‘0’, the result is placed in the W register. If ‘d’ is ‘1’, the result is placed back in register ‘f’. If the result is ‘1’, the next instruction is executed. If the result is ‘0’, a NOP is executed instead, making it a two-cycle instruction.

RETFIE — Return from Interrupt

Syntax:	[*label*] RETFIE
Operands:	None
Operation:	TOS → PC, 1 → GIE
Status Affected:	None
Encoding:	`00` `0000` `0000` `1001`
Description:	Return from Interrupt. Stack is POPed and Top-of-Stack (TOS) is loaded in the PC. Interrupts are enabled by setting Global Interrupt Enable bit, GIE of the INTCON Register. This is a two-cycle instruction.

RETLW — Return with Literal in W

Syntax:	[*label*] RETLW k
Operands:	$0 \le k \le 255$
Operation:	k → (W); TOS → PC
Status Affected:	None
Encoding:	`11` `01xx` `kkkk` `kkkk`
Description:	The W register is loaded with the eight-bit literal ‘k’. The program counter is loaded from the top of the stack (the return address). This is a two-cycle instruction.

RETURN — Return from Subroutine

Syntax:	[*label*] RETURN
Operands:	None
Operation:	TOS → PC
Status Affected:	None
Description:	Return from subroutine. The stack is POPed and the top of the stack (TOS) is loaded into the program counter. This is a two-cycle instruction.

RLF — Rotate Left f through Carry

Syntax:	[*label*] RLF f,d
Operands:	$0 \le f \le 127$ $d \in [0,1]$
Operation:	See description below
Status Affected:	C
Encoding:	`00` `1101` `dfff` `ffff`
Description:	The contents of register ‘f’ are rotated one bit to the left through the Carry Flag. If ‘d’ is ‘`0`’, the result is placed in the W register. If ‘d’ is ‘`1`’, the result is stored back in register ‘f’. 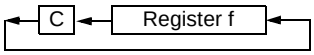

RRF — Rotate Right f through Carry

Syntax:	[*label*] RRF f,d
Operands:	$0 \le f \le 127$ $d \in [0,1]$
Operation:	See description below
Status Affected:	C
Encoding:	`00` `1100` `dfff` `ffff`
Description:	The contents of register ‘f’ are rotated one bit to the right through the Carry Flag. If ‘d’ is ‘`0`’, the result is placed in the W register. If ‘d’ is ‘`1`’ the result is placed back in register ‘f’.

SLEEP — Go into Standby mode

Syntax:	[*label*] SLEEP
Operands:	None
Operation:	00h → WDT, 0 → WDT prescaler, 1 → $\overline{TO}$, 0 → $\overline{PD}$
Status Affected:	$\overline{TO}$, $\overline{PD}$
Encoding:	`00` `0000` `0110` `0011`
Description:	The power-down Status bit, $\overline{PD}$ is cleared. Time out Status bit, $\overline{TO}$ is set. Watchdog Timer and its prescaler are cleared. The processor is put into Sleep mode with the oscillator stopped.

19.2 DC Characteristics: PIC16F785/HV785-I (Industrial)(1), (2)

DC CHARACTERISTICS		Standard Operating Conditions (unless otherwise stated) Operating temperature -40°C ≤ TA ≤ +85°C for industrial					
Param No.	Device Characteristics	Min	Typ†	Max	Units	Conditions	
						VDD	
D010	**Supply Current (IDD)**	—	11	23	μA	2.0	FOSC = 32 kHz LP Oscillator mode
		—	18	38	μA	3.0	
		—	35	75	μA	5.0	
D011		—	140	240	μA	2.0	FOSC = 1 MHz XT Oscillator mode
		—	220	380	μA	3.0	
		—	380	550	μA	5.0	
D012		—	260	360	μA	2.0	FOSC = 4 MHz XT Oscillator mode
		—	420	650	μA	3.0	
		—	0.8	1.1	mA	5.0	
D013		—	130	220	μA	2.0	FOSC = 1 MHz EC Oscillator mode
		—	215	360	μA	3.0	
		—	360	520	μA	5.0	
D014		—	220	340	μA	2.0	FOSC = 4 MHz EC Oscillator mode
		—	375	550	μA	3.0	
		—	0.65	1	mA	5.0	
D015		—	8	20	μA	2.0	FOSC = 31 kHz INTRC mode
		—	16	40	μA	3.0	
		—	31	65	μA	5.0	
D016		—	340	450	μA	2.0	FOSC = 4 MHz INTOSC mode
		—	500	700	μA	3.0	
		—	800	1200	μA	5.0	
D017		—	230	400	μA	2.0	FOSC = 4 MHz EXTRC mode
		—	400	680	μA	3.0	
		—	0.63	1.1	mA	5.0	
D018		—	2.6	3.25	mA	4.5	FOSC = 20 MHz HS Oscillator mode
		—	2.8	3.35	mA	5.0	

† Data in 'Typ' column is at 5.0V, 25°C unless otherwise stated. These parameters are for design guidance only and are not tested.

Note 1: The test conditions for all IDD measurements in Active Operation mode are: OSC1 = external square wave, from rail-to-rail; all I/O pins tri-stated, pulled to VDD; $\overline{\text{MCLR}}$ = VDD; WDT disabled.

2: The supply current is mainly a function of the operating voltage and frequency. Other factors such as I/O pin loading and switching rate, oscillator type, internal code execution pattern and temperature also have an impact on the current consumption.

3: The peripheral current is the sum of the base IDD or IPD and the additional current consumed when this peripheral is enabled. The peripheral Δ current can be determined by subtracting the base IDD or IPD current from this limit. Max values should be used when calculating total current consumption.

4: The power-down current in Sleep mode does not depend on the oscillator type. Power-down current is measured with the part in Sleep mode, with all I/O pins in high-impedance state and tied to VDD. When A/D is off, it will not consume any current other than leakage current. the power-down current spec includes any such leakage from the A/D module.

© 2008 Microchip Technology Inc.

FIGURE 20-2: MAXIMUM IDD vs. FOSC OVER VDD (EC MODE)

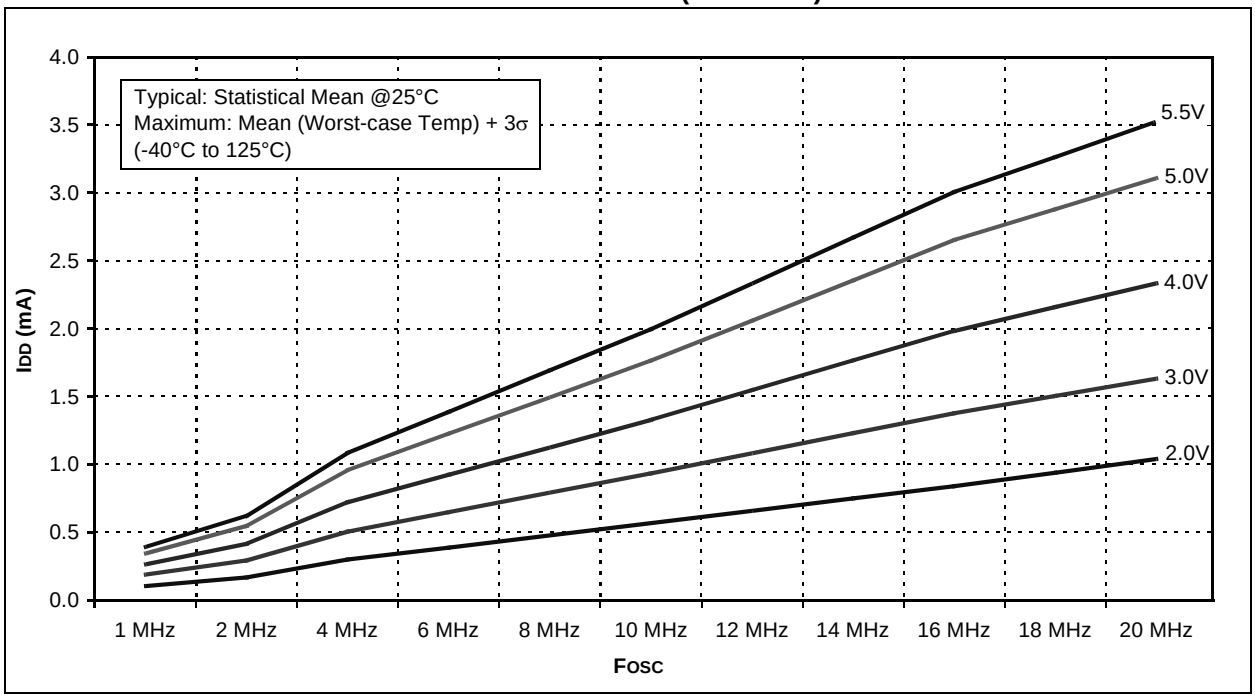

FIGURE 20-3: TYPICAL IDD vs. FOSC OVER VDD (HS MODE)

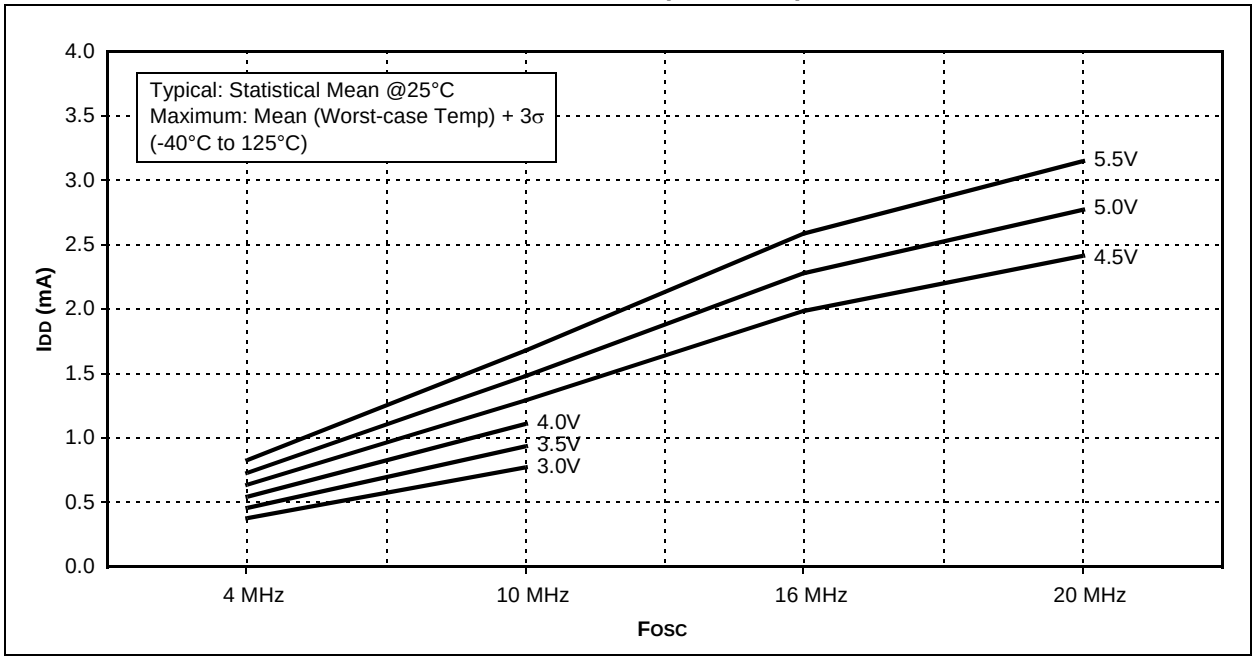

© 2008 Microchip Technology Inc.

FIGURE 20-12: MAXIMUM IDD vs. FOSC OVER VDD (HFINTOSC MODE)

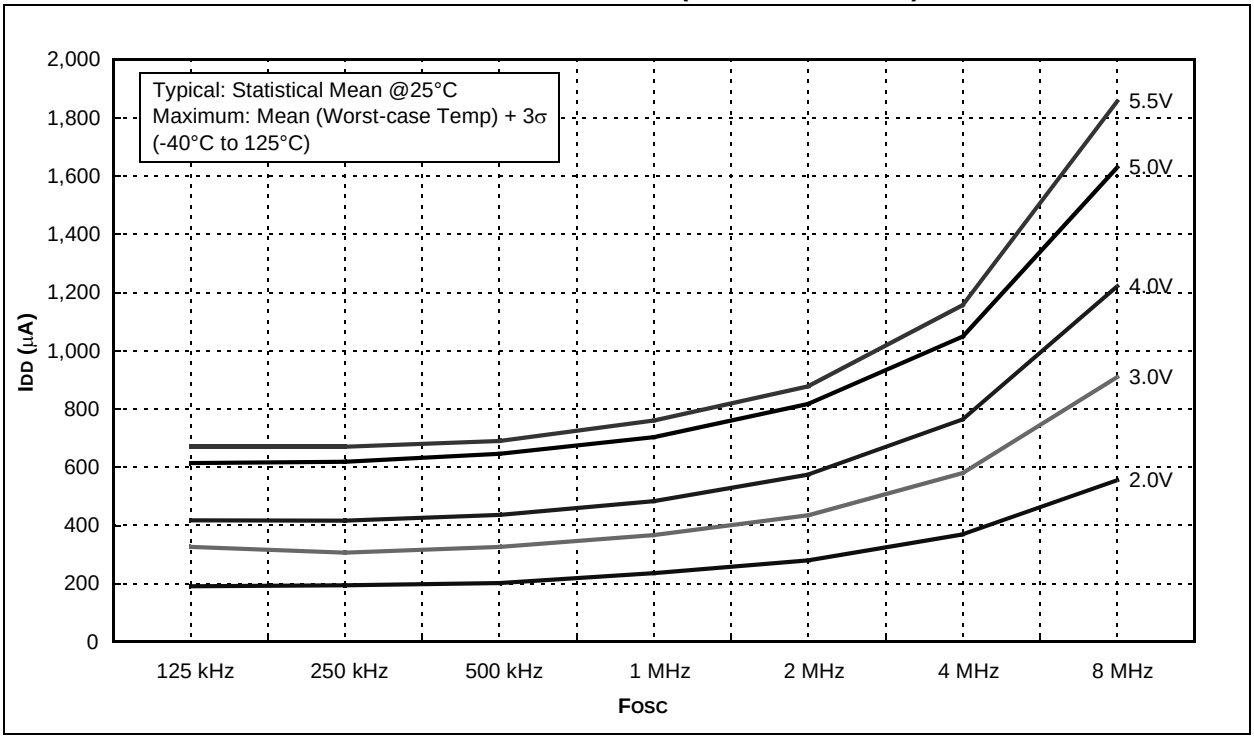

FIGURE 20-13: TYPICAL IPD vs. VDD (SLEEP MODE, ALL PERIPHERALS DISABLED)

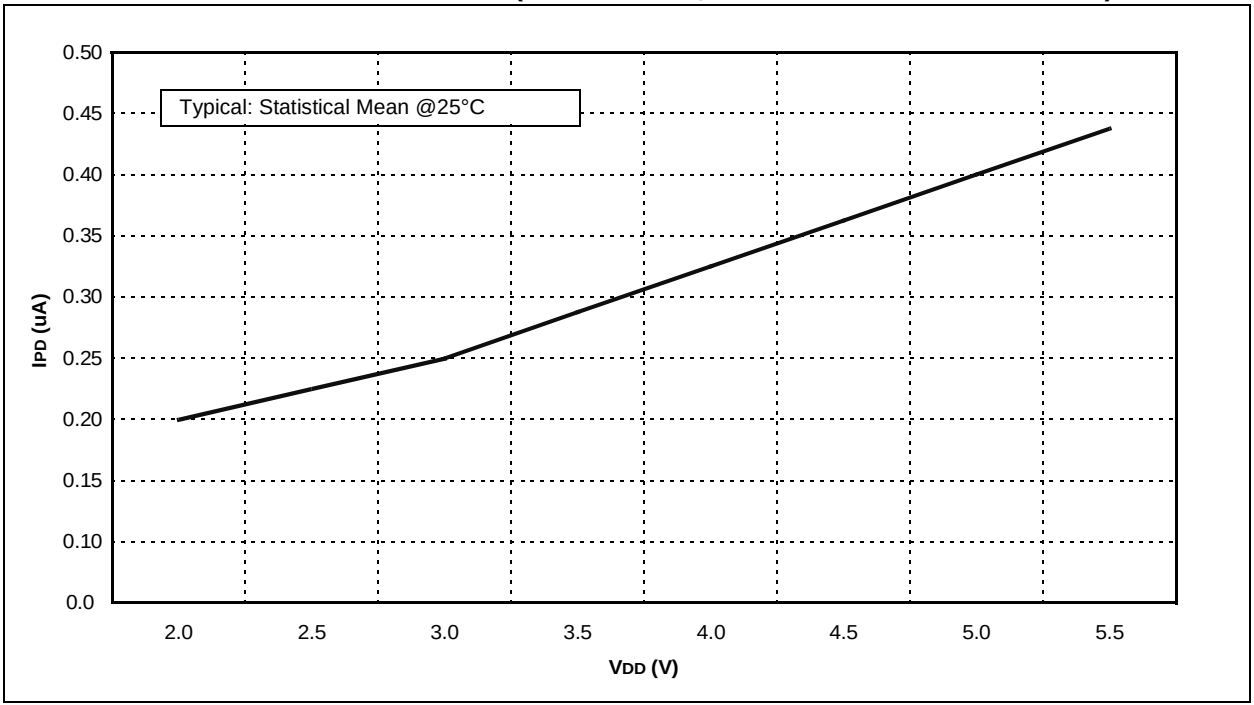

Interrupt Context Saving 120
Code Protection 124
Comparator Module 63
Associated Registers 74
C1 Output State Versus Input Conditions 63
C2 Output State Versus Input Conditions 66
Comparator Interrupts 69
Effects of Reset 69
Comparator Voltage Reference (CVREF)
Specifications 157
Comparators
C2OUT as T1 Gate 52
Specifications 157
Compare Module. *See* Capture/Compare/PWM (CCP)
CONFIG Register 108
Configuration Bits 107
Customer Change Notification Service 201
Customer Notification Service 201
Customer Support 201

D

Data EEPROM Memory
Associated Registers 106
Code Protection 103, 106
Data Memory 9
DC and AC Characteristics
Graphs and Tables 163
DC Characteristics
Extended and Industrial 148
Industrial and Extended 143
Development Support 137
Device Overview 5

E

EEADR Register 103
EECON1 Register 104
EECON2 Register 104
EEDAT Register 103
EEPROM Data Memory
Avoiding Spurious Write 105
Reading 105
Write Verify 105
Writing 105
Effects of Reset
A/D module 89
Comparator module 69
OPA module 77
PWM mode 62
Electrical Specifications 141
Errata 4

F

Fail-Safe Clock Monitor 31
Fail-Safe Condition Clearing 32
Reset and Wake-up from Sleep 32
Firmware Instructions 127
Fuses. *See* Configuration Bits

G

General Purpose Register File 9

I

ID Locations 124
In-Circuit Debugger 125
In-Circuit Serial Programming (ICSP) 124
Indirect Addressing, INDF and FSR Registers 22
Instruction Format 127
Instruction Set 127
ADDLW 129
ADDWF 129
ANDLW 129
ANDWF 129
MOVF 132
RRF 133
SLEEP 133
SUBLW 134
SUBWF 134
SWAPF 134
TRIS 134
XORLW 134
XORWF 135
BCF 129
BSF 129
BTFSC 130
BTFSS 130
CALL 130
CLRF 130
CLRW 130
CLRWDT 130
COMF 131
DECF 131
DECFSZ 131
GOTO 131
INCF 131
INCFSZ 131
IORLW 132
IORWF 132
MOVLW 132
MOVWF 132
NOP 132
RETFIE 133
RETLW 133
RETURN 133
RLF 133
Summary Table 128
INTCON Register 17
Internal Oscillator Block
INTOSC
Specifications 153
Internal Sampling Switch (Rss) Impedance 86
Internet Address 201
Interrupts 117
(CCP) Compare 58
A/D 85
Associated Registers 119
Comparator 69
Context Saving 120
Data EEPROM Memory Write 104
Interrupt-on-Change 37
Oscillator Fail (OSF) 31
PORTA Interrupt-on-change 118
RA2/INT 118
TMR0 118
TMR1 52
TMR2 to PR2 Match 55, 56
INTOSC Specifications 153
IOCA (Interrupt-on-Change) 37
IOCA Register 37

L

Load Conditions 150

© 2008 Microchip Technology Inc.

M

MCLR 110
Internal 110
..... 9
Data 9
Data EEPROM Memory 103
Program 9
..... 201, 193, 138, 139, 137, 139, 138

O

OPA2CON Register 76
OPCODE Field Descriptions 127
Operational Amplifier (OPA) Module
AC Specifications 158, 159
Associated Registers 77
DC Specifications 158
OPTION_REG Register 17
OSCCON Register 33
Oscillator
Associated Registers 34
Oscillator Specifications 151
Oscillator Start-up Timer (OST)
Specifications 154
Oscillator Switching
Fail-Safe Clock Monitor 31
Two-Speed Clock Start-up 30
OSCTUNE
Oscillator Tuning Register (Address 90h) 28

P

Packaging 187
PCL and PCLATH 21
Stack 21
PCON
Power Control Register (Address
8Eh) 20
PCON Register 112
PICSTART Plus Development Programmer 140
PIE1 Register 18
Pin Diagram 2, 3
Pinout Descriptions
PIC16F684 6
PIR1 Register 19
PORTA 35
Additional Pin Functions 36
Interrupt-on-change 37
Weak Pull-up 36
Associated Registers 41
Pin Descriptions and Diagrams 38
RA0 38
RA1 38
RA2 39
RA3 39
RA4 40
RA5 40
Specifications 152
PORTB 42
Associated Registers 44
Pin Descriptions and Diagrams 43
RB4 43
RB5 43
RB6 43
RB7 43
PORTC 45
Associated Registers 34, 48
Pin Descriptions and Diagrams 46
RC0 46
RC1 46
RC2 47
RC3 47
RC4 47
RC5 48
RC6 46
RC7 46
Specifications 152
Power-Down Mode (Sleep) 123
Power-up Timer (PWRT) 110
Specifications 154
Power-up Timing Delays 112
Precision Internal Oscillator Parameters 153
Prescaler
Shared WDT/Timer0 50
Switching Prescaler Assignment 50
Program Memory 9
Map and Stack 9
Programming, Device Instructions 127
PWM. *See* Two Phase PWM
PWMCLK Register 94
PWMCON0 Register 93
PWMCON1 Register 101
PWMPH1 Register 95
PWMPH2 Register 96

R

Reader Response 202
Read-Modify-Write Operations 127
REFCON (VR Control) 73
Register
INTCON INTERRUPT CONTROL REGISTER (ADDRESS
0Bh, 8Bh, 10Bh or 183h) 17
IOCA (Interrupt-on-Change) 37
WPUA (Weak Pull-up PORTA) 36
Registers
ADCON0 (A/D Control 0) 83
ADCON1 (A/D Control 1) 84
ANSEL (Analog Select) 93, 94, 101
ANSEL0 (Analog Select 0) 82
ANSEL1 (Analog Select 1) 82
CCP1CON (CCP Operation) 57
CCPR1H 57
CCPR1L 57
CM1CON0 (C1 Control) 65
CM1CON0 (C2 Control)
CM2CON0 67
CM2CON1 (C2 Control) 68
CONFIG (Configuration Word) 108
Data Memory Map 10
EEADR (EEPROM Address) 103
EECON1 (EEPROM Control 1) 104
EECON2 (EEPROM Control 2) 104
EEDAT (EEPROM Data) 103
INTCON (Interrupt Control) 17
IOCA (Interrupt-on-Change PORTA) 37
Op Amp 2 Control Register (OPA2CON) 76
OPTION_REG
OPTION REGISTER 16
OPTION_REG (Option) 17
OSCCON (Oscillator Control) 33
PCON (Power Control) 112
PIE1 (Peripheral Interrupt Enable 1) 18