Welcome to E-XFL.COM

What is "Embedded - Microcontrollers"?

"Embedded - Microcontrollers" refer to small, integrated circuits designed to perform specific tasks within larger systems. These microcontrollers are essentially compact computers on a single chip, containing a processor core, memory, and programmable input/output peripherals. They are called "embedded" because they are embedded within electronic devices to control various functions, rather than serving as standalone computers. Microcontrollers are crucial in modern electronics, providing the intelligence and control needed for a wide range of applications.

Applications of "Embedded - Microcontrollers"

Details	
Product Status	Obsolete
Core Processor	8051
Core Size	8-Bit
Speed	12MHz
Connectivity	SPI, UART/USART
Peripherals	POR, WDT
Number of I/O	32
Program Memory Size	12KB (12K x 8)
Program Memory Type	FLASH
EEPROM Size	-
RAM Size	256 x 8
Voltage - Supply (Vcc/Vdd)	2.7V ~ 6V
Data Converters	-
Oscillator Type	Internal
Operating Temperature	0°C ~ 70°C (TA)
Mounting Type	Surface Mount
Package / Case	44-TQFP
Supplier Device Package	44-TQFP (10x10)
Purchase URL	https://www.e-xfl.com/product-detail/microchip-technology/at89ls53-12ac

Pin Configurations

PDIP

1	40
2	39
3	38
4	37
5	36
6	35
7	34
8	33
9	32
10	31
11	30
12	29
13	28
14	27
15	26
16	25
17	24
18	23
19	22
20	21t..686 6426.6869 5u6 65Tj J555
	.761 7 rT.686 649.657238 77 J564242.09 5u6 6 643.987 m 1J555

Pin Description

V_{CC}
Supply voltage.

GND
Ground.

Port 0
Port 0 is an 8-bit open drain bidirectional I/O port. As an output port, each pin can sink eight TTL inputs. When 1s are written to port 0 pins, the pins can be used as high-impedance inputs.

Port 0 can also be configured to be the multiplexed low-order address/data bus during accesses to external program and data memory. In this mode, P0 has internal pullups.

Port 0 also receives the code bytes during Flash programming and outputs the code bytes during program verification. External pullups are required during program verification.

Port 1
Port 1 is an 8-bit bidirectional I/O port with internal pullups. The Port 1 output buffers can sink/source four TTL inputs. When 1s are written to Port 1 pins, they are pulled high by the internal pullups and can be used as inputs. As inputs, Port 1 pins that are externally being pulled low will source current (I_{IL}) because of the internal pullups.

Some Port 1 pins provide additional functions. P1.0 and P1.1 can be configured to be the timer/counter 2 external count input (P1.0/T2) and the timer/counter 2 trigger input (P1.1/T2EX), respectively.

Block Diagram

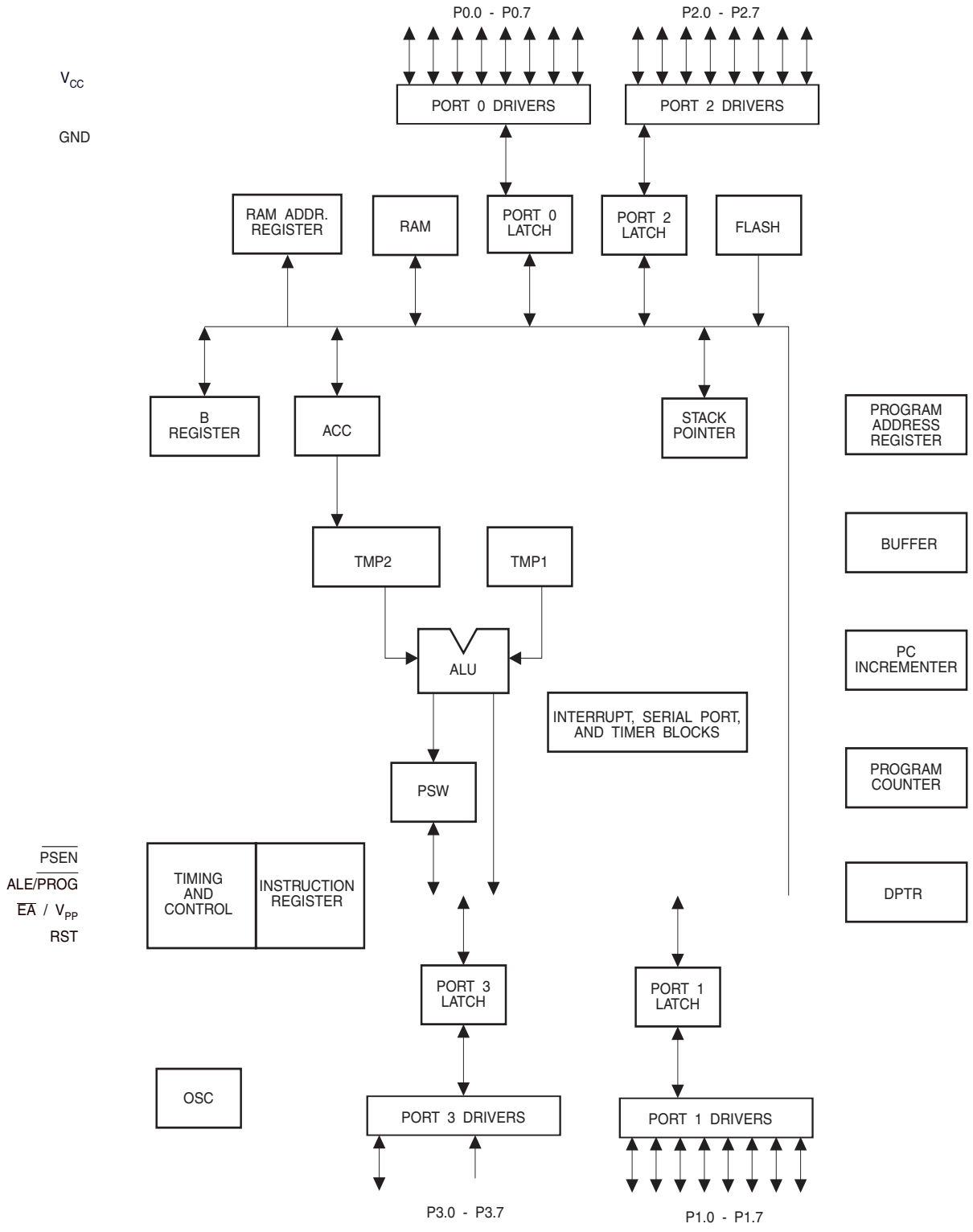

Dual Data Pointer Registers To facilitate accessing external data memory, two banks of 16 bit Data Pointer Registers are provided: DP0 at SFR address locations 82H-83H and DP1 at 84H-85H. Bit DPS = 0 in SFR WCON selects DP0 and DPS = 1 selects DP1. The user should always initialize the DPS bit to the appropriate value before accessing the respective Data Pointer register.

Power Off Flag The Power Off Flag (POF) is located at bit_4 (PCON.4) in the PCON SFR. POF is set to “1” during power up. It can be set and reset under software control and is not affected by RESET.

Table 3. WCON—Watchdog Control Register

WCON Address = 96H — Reset Value = 0000 0010B

	PS2	PS1	PS0	reserved	reserved	DPS	WDTRST	WDTEN
Bit	7	6	5	4	3	2	1	0

Symbol	Function
PS2 PS1 PS0	Prescaler Bits for the Watchdog Timer. When all three bits are set to “0”, the watchdog timer has a nominal period of 16 ms. When all three bits are set to “1”, the nominal period is 2048 ms.
DPS	Data Pointer Register Select. DPS = 0 selects the first bank of Data Pointer Register, DP0, and DPS = 1 selects the second bank, DP1
WDTRST	Watchdog Timer Reset. Each time this bit is set to “1” by user software, a pulse is generated to reset the watchdog timer. The WDTRST bit is then automatically reset to “0” in the next instruction cycle. The WDTRST bit is Write-Only.
WDTEN	Watchdog Timer Enable Bit. WDTEN = 1 enables the watchdog timer and WDTEN = 0 disables the watchdog timer.

Table 4. SPCR—SPI Control Register

SPCR Address = D5H — Reset Value = 0000 01XXB

	SPIE	SPE	DORD	MSTR	CPOL	CPHA	SPR1	SPR0
Bit	7	6	5	4	3	2	1	0

Symbol	Function
SPIE	SPI Interrupt Enable. This bit, in conjunction with the ES bit in the IE register, enables SPI interrupts: SPIE = 1 and ES = 1 enable SPI interrupts. SPIE = 0 disables SPI interrupts.
SPE	SPI Enable. SPI = 1 enables the SPI channel and connects $\overline{SS}$, MOSI, MISO and SCK to pins P1.4, P1.5, P1.6, and P1.7. SPI = 0 disables the SPI channel.
DORD	Data Order. DORD = 1 selects LSB first data transmission. DORD = 0 selects MSB first data transmission.
MSTR	Master/Slave Select. MSTR = 1 selects Master SPI mode. MSTR = 0 selects Slave SPI mode.
CPOL	Clock Polarity. When CPOL = 1, SCK is high when idle. When CPOL = 0, SCK of the master device is low when not transmitting. Please refer to figure on SPI Clock Phase and Polarity Control.
CPHA	Clock Phase. The CPHA bit together with the CPOL bit controls the clock and data relationship between master and slave. Please refer to figure on SPI Clock Phase and Polarity Control.
SPR0 SPR1	SPI Clock Rate Select. These two bits control the SCK rate of the device configured as master. SPR1 and SPR0 have no effect on the slave. The relationship between SCK and the oscillator frequency, $F_{OSC.}$, is as follows: SPR1 — SPR0 — SCK = $F_{OSC.}$ divided by 0 — 0 — 4 0 — 1 — 16 1 — 0 — 64 1 — 1 — 128

Table 5. SPSR—SPI Status Register

SPSR Address = AAH — Reset Value = 00XX XXXXB

	SPIF	WCOL	—	—	—	—	—	—
Bit	7	6	5	4	3	2	1	0

Symbol	Function
SPIF	SPI Interrupt Flag. When a serial transfer is complete, the SPIF bit is set and an interrupt is generated if SPIE = 1 and ES = 1. The SPIF bit is cleared by reading the SPI status register with SPIF and WCOL bits set, and then accessing the SPI data register.
WCOL	Write Collision Flag. The WCOL bit is set if the SPI data register is written during a data transfer. During data transfer, the result of reading the SPDR register may be incorrect, and writing to it has no effect. The WCOL bit (and the SPIF bit) are cleared by reading the SPI status register with SPIF and WCOL set, and then accessing the SPI data register.

Figure 3. Timer 2 Auto Reload Mode (DCEN = 1)

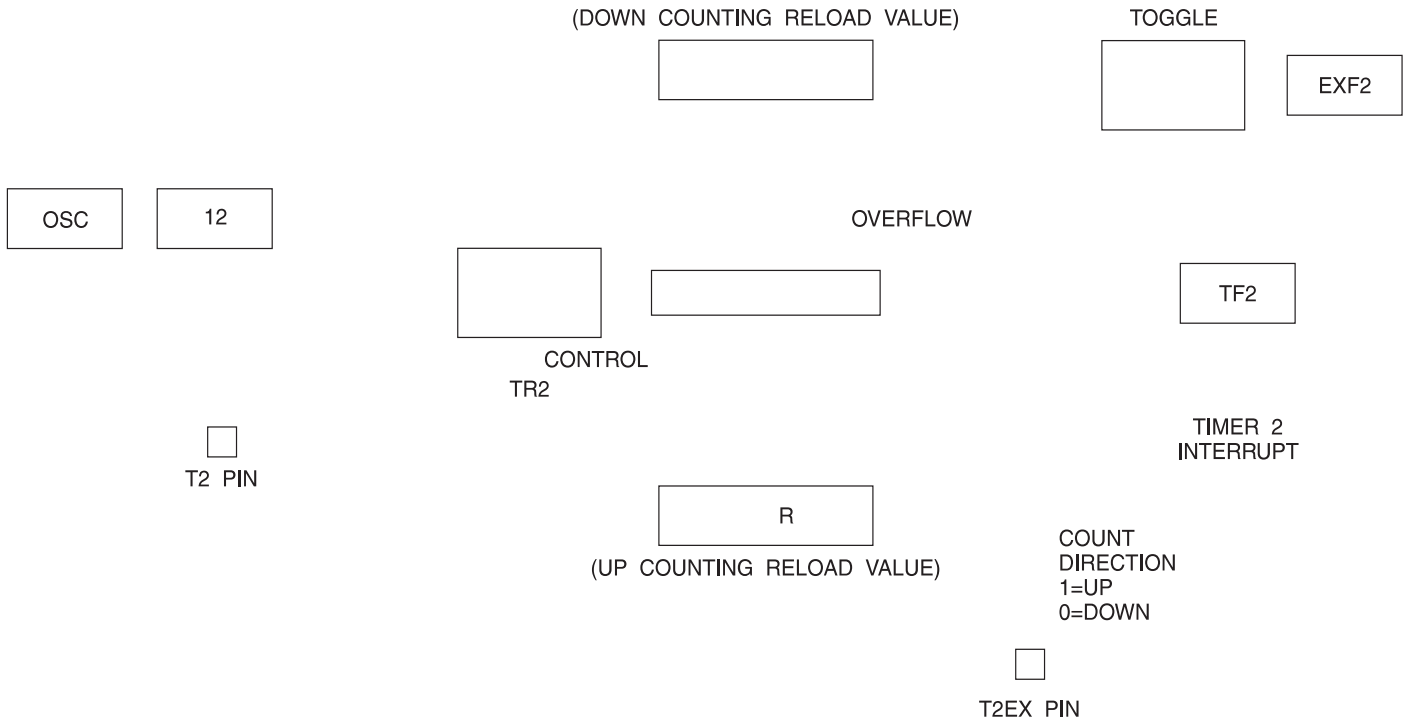

Baud Rate Generator

Timer 2 is selected as the baud rate generator by setting TCLK and/or RCLK in T2CON (Table 2). Note that the baud rates for transmit and receive can be different if Timer 2 is used for the receiver or transmitter and Timer 1 is used for the other function. Setting RCLK and/or TCLK puts Timer 2 into its baud rate generator mode, as shown in Figure 4.

The baud rate generator mode is similar to the auto-reload mode, in that a rollover in TH2 causes the Timer 2 registers to be reloaded with the 16 bit value in registers RCAP2H and RCAP2L, which are preset by software.

The baud rates in Modes 1 and 3 are determined by Timer 2's overflow rate according to the following equation.

$$\text{Modes 1 and 3 Baud Rates} = \frac{\text{Timer 2 Overflow Rate}}{16}$$

The Timer can be configured for either timer or counter operation. In most applications, it is configured for timer operation ($CP/\overline{T2} = 0$). The timer operation is different for Timer 2 when it is used as a baud rate generator. Normally, as a timer, it increments every machine cycle (at 1/12 the oscillator frequency). As a baud rate generator, however, it increments every state time (at 1/2 the oscillator frequency). The baud rate formula is given below.

$$\frac{\text{Modes 1 and 3}}{\text{Baud Rate}} = \frac{\text{Oscillator Frequency}}{32 \times [65536 - (\text{RCAP2H,RCAP2L})]}$$

where (RCAP2H, RCAP2L) is the content of RCAP2H and RCAP2L taken as a 16 bit unsigned integer.

Timer 2 as a baud rate generator is shown in Figure 4. This figure is valid only if RCLK or TCLK = 1 in T2CON. Note that a rollover in TH2 does not set TF2 and will not generate an interrupt. Note too, that if EXEN2 is set, a 1-to-0 transition in T2EX will set EXF2 but will not cause a reload from (RCAP2H, RCAP2L) to (TH2, TL2). Thus when Timer 2 is in use as a baud rate generator, T2EX can be used as an extra external interrupt.

Note that when Timer 2 is running (TR2 = 1) as a timer in the baud rate generator mode, TH2 or TL2 should not be read from or written to. Under these conditions, the Timer is incremented every state time, and the results of a read or write may not be accurate. The RCAP2 registers may be read but should not be written to, because a write might overlap a reload and cause write and/or reload errors. The timer should be turned off (clear TR2) before accessing the Timer 2 or RCAP2 registers.

Figure 5. Timer 2 in Clock-Out Mode

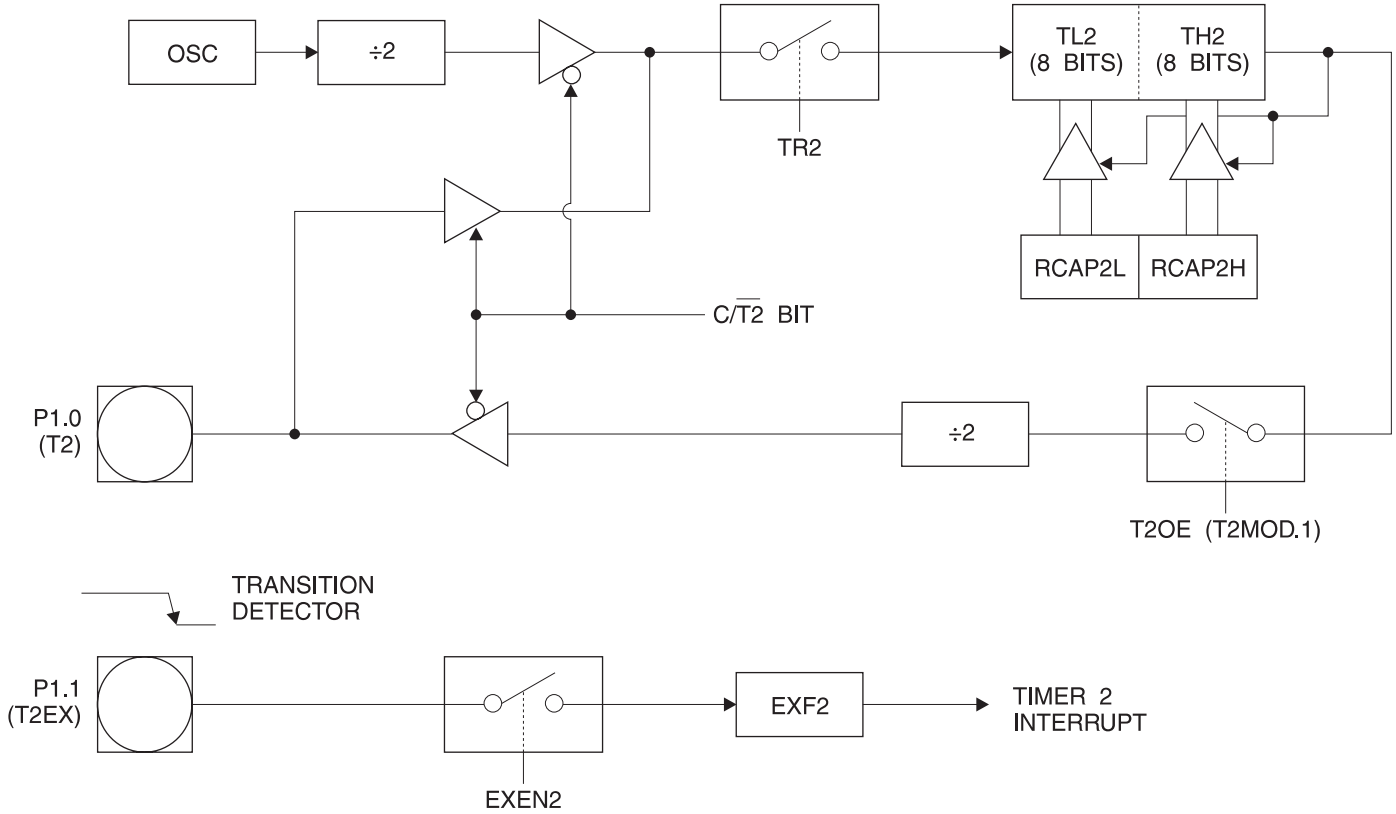

The interconnection between master and slave CPUs with SPI is shown in the following figure. The SCK pin is the clock output in the master mode but is the clock input in the slave mode. Writing to the SPI data register of the master CPU starts the SPI clock generator, and the data written shifts out of the MOSI pin and into the MOSI pin of the slave CPU. After shifting one byte, the SPI clock generator stops, setting the end of transmission flag (SPIF). If both the SPI interrupt enable bit (SPIE) and the serial port interrupt enable bit (ES) are set, an interrupt is requested.

The Slave Select input, $\overline{SS}$/P1.4, is set low to select an individual SPI device as a slave. When $\overline{SS}$/P1.4 is set high, the SPI port is deactivated and the MOSI/P1.5 pin can be used as an input.

There are four combinations of SCK phase and polarity with respect to serial data, which are determined by control bits CPHA and CPOL. The SPI data transfer formats are shown in Figures 8 and 9.

Figure 7. SPI Master-Slave Interconnection

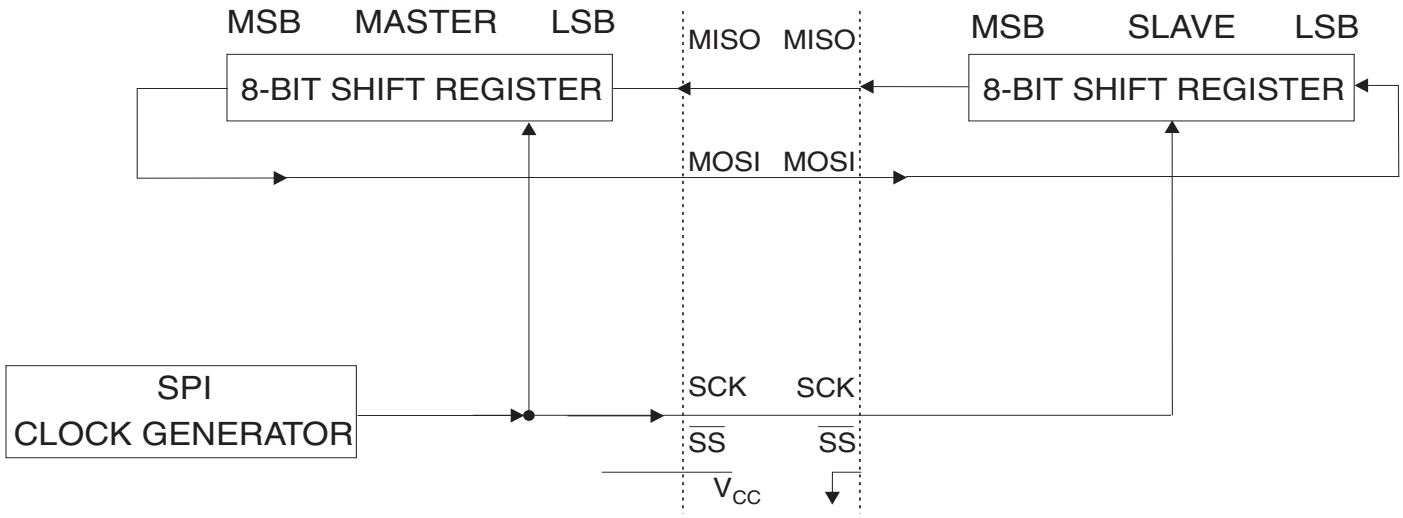

Figure 8. SPI transfer Format with CPHA = 0

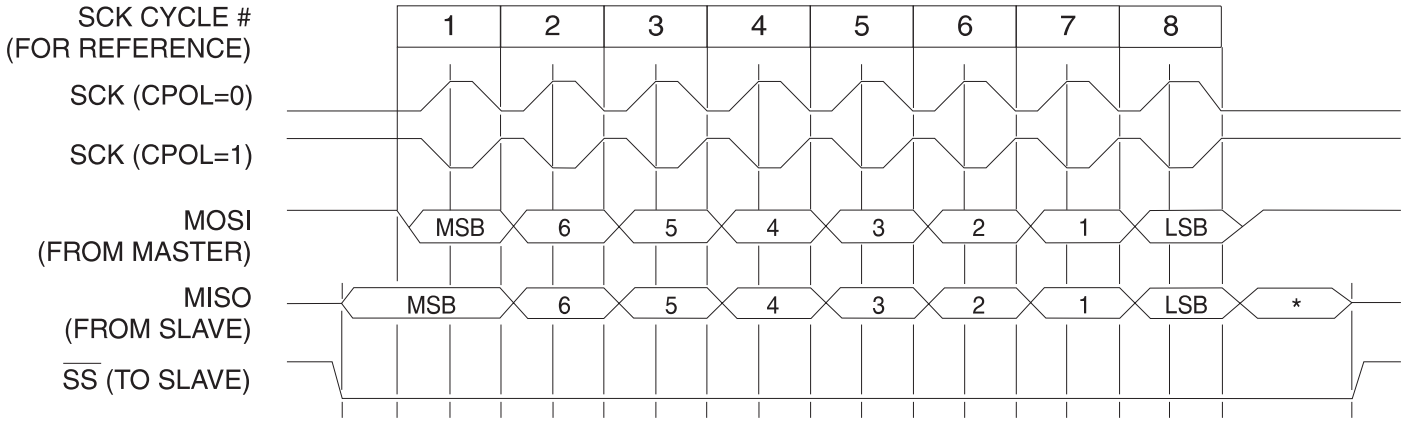

*Not defined but normally MSB of character just received

Figure 9. SPI Transfer Format with CPHA = 1

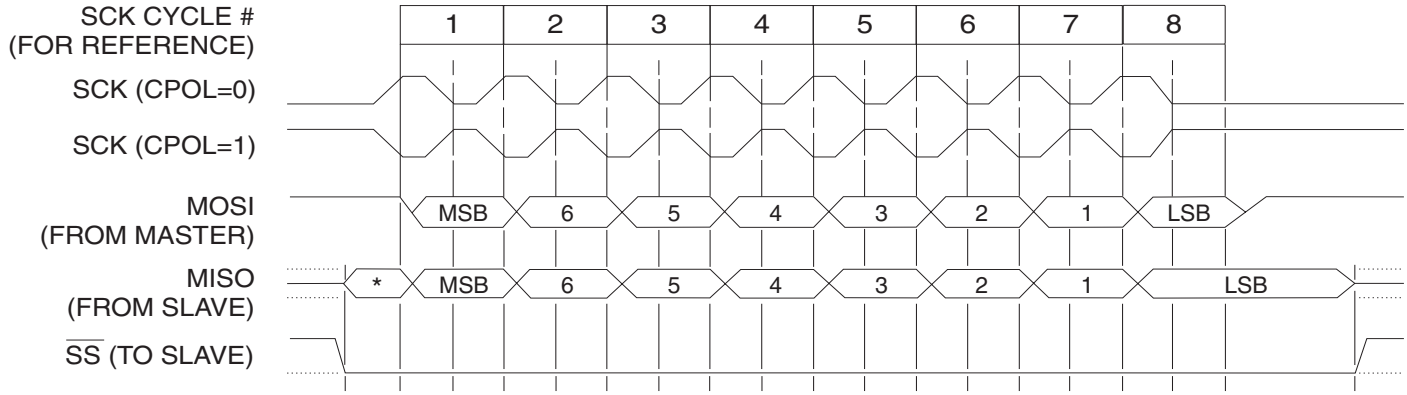

*Not defined but normally LSB of previously transmitted character

Interrupts

The AT89LS53 has a total of six interrupt vectors: two external interrupts ($\overline{INT0}$ and $\overline{INT1}$), three timer interrupts (Timers 0, 1, and 2), and the serial port interrupt. These interrupts are all shown in Figure 10.

Each of these interrupt sources can be individually enabled or disabled by setting or clearing a bit in Special Function Register IE. IE also contains a global disable bit, EA, which disables all interrupts at once.

Note that Table 10 shows that bit position IE.6 is unimplemented. In the AT89C51 and AT89LV51, bit position IE.5 is also unimplemented. User software should not write 1s to these bit positions, since they may be used in future AT89 products.

Timer 2 interrupt is generated by the logical OR of bits TF2 and EXF2 in register T2CON. Neither of these flags is cleared by hardware when the service routine is vectored to. In fact, the service routine may have to determine whether it was TF2 or EXF2 that generated the interrupt, and that bit will have to be cleared in software.

The Timer 0 and Timer 1 flags, TF0 and TF1, are set at S5P2 of the cycle in which the timers overflow. The values are then polled by the circuitry in the next cycle. However, the Timer 2 flag, TF2, is set at S2P2 and is polled in the same cycle in which the timer overflows.

Table 10. Interrupt Enable (IE) Register

(MSB) (LSB)

EA	—	ET2	ES	ET1	EX1	ET0	EX0

Enable Bit = 1 enables the interrupt.

Enable Bit = 0 disables the interrupt.

Symbol	Position	Function
EA	IE.7	Disables all interrupts. If EA = 0, no interrupt is acknowledged. If EA = 1, each interrupt source is individually enabled or disabled by setting or clearing its enable bit.
—	IE.6	Reserved.
ET2	IE.5	Timer 2 interrupt enable bit.
ES	IE.4	SPI and UART interrupt enable bit.
ET1	IE.3	Timer 1 interrupt enable bit.
EX1	IE.2	External interrupt 1 enable bit.
ET0	IE.1	Timer 0 interrupt enable bit.
EX0	IE.0	External interrupt 0 enable bit.
User software should never write 1s to unimplemented bits, because they may be used in future AT89 products.		

Figure 10. Interrupt Sources

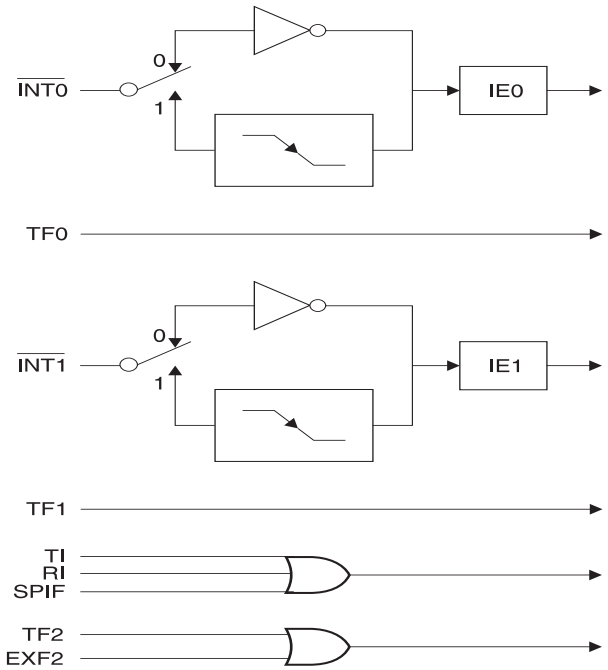
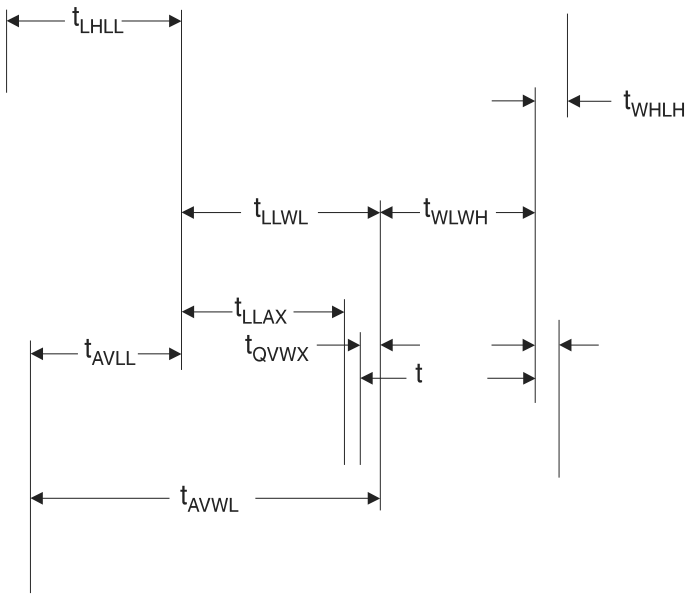
External Data Memory Write Cycle