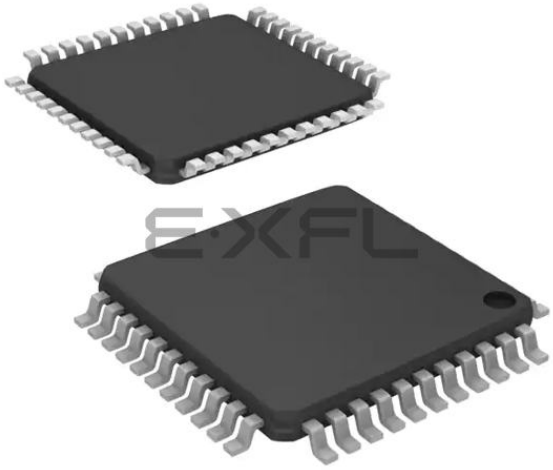

Welcome to E-XFL.COM

What is "Embedded - Microcontrollers"?

"Embedded - Microcontrollers" refer to small, integrated circuits designed to perform specific tasks within larger systems. These microcontrollers are essentially compact computers on a single chip, containing a processor core, memory, and programmable input/output peripherals. They are called "embedded" because they are embedded within electronic devices to control various functions, rather than serving as standalone computers. Microcontrollers are crucial in modern electronics, providing the intelligence and control needed for a wide range of applications.

Applications of "Embedded - Microcontrollers"

Details	
Product Status	Obsolete
Core Processor	dsPIC
Core Size	16-Bit
Speed	60 MIPs
Connectivity	CANbus, I²C, IrDA, LINbus, QEI, SPI, UART/USART
Peripherals	Brown-out Detect/Reset, DMA, Motor Control PWM, POR, PWM, WDT
Number of I/O	35
Program Memory Size	256KB (85.5K x 24)
Program Memory Type	FLASH
EEPROM Size	-
RAM Size	16K x 16
Voltage - Supply (Vcc/Vdd)	3V ~ 3.6V
Data Converters	A/D 9x10b/12b
Oscillator Type	Internal
Operating Temperature	-40°C ~ 125°C (TA)
Mounting Type	Surface Mount
Package / Case	44-TQFP
Supplier Device Package	44-TQFP (10x10)
Purchase URL	https://www.e-xfl.com/product-detail/microchip-technology/dspic33ep256mc504t-e-pt

Pin Diagrams

28-Pin SPDIP/SOIC/SSOP(1,2)

■ = Pins are up to 5V tolerant

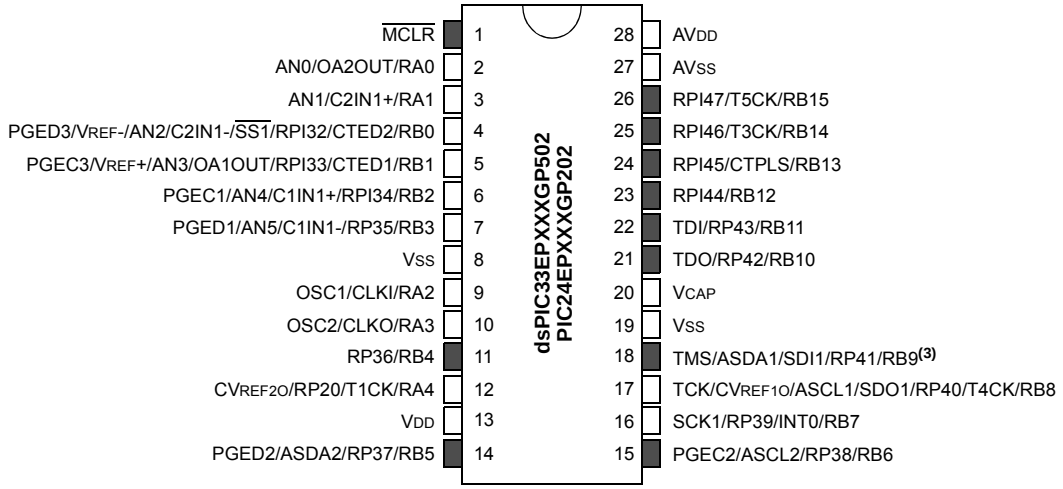

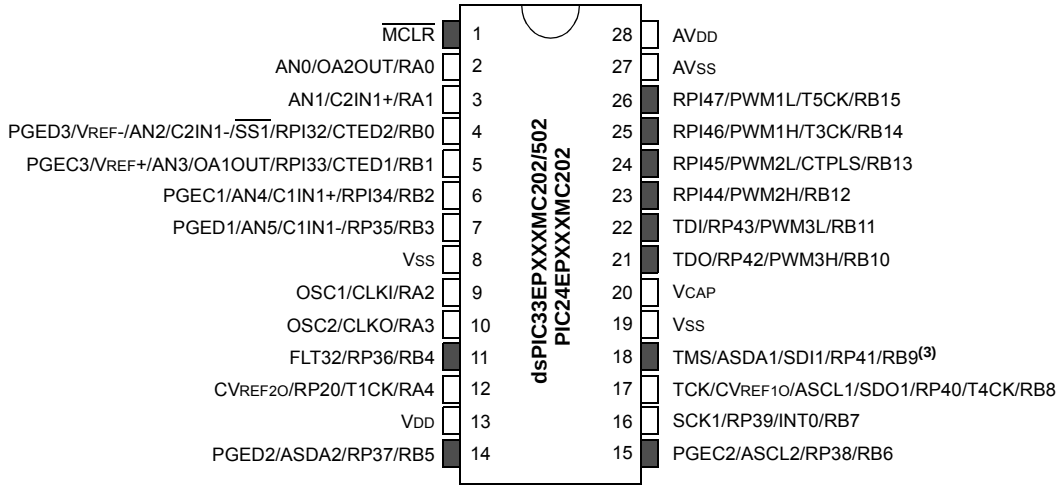

Note 1: The RPn/RPIn pins can be used by any remappable peripheral with some limitation. See **Section 11.4 "Peripheral Pin Select (PPS)"** for available peripherals and for information on limitations.

2: Every I/O port pin (RAx-RGx) can be used as a Change Notification pin (CNAx-CNGx). See **Section 11.0 "I/O Ports"** for more information.

3: There is an internal pull-up resistor connected to the TMS pin when the JTAG interface is active. See the JTAGEN bit field in Table 27-2.

Pin Diagrams (Continued)

64-Pin QFN(1,2,3,4)

■ = Pins are up to 5V tolerant

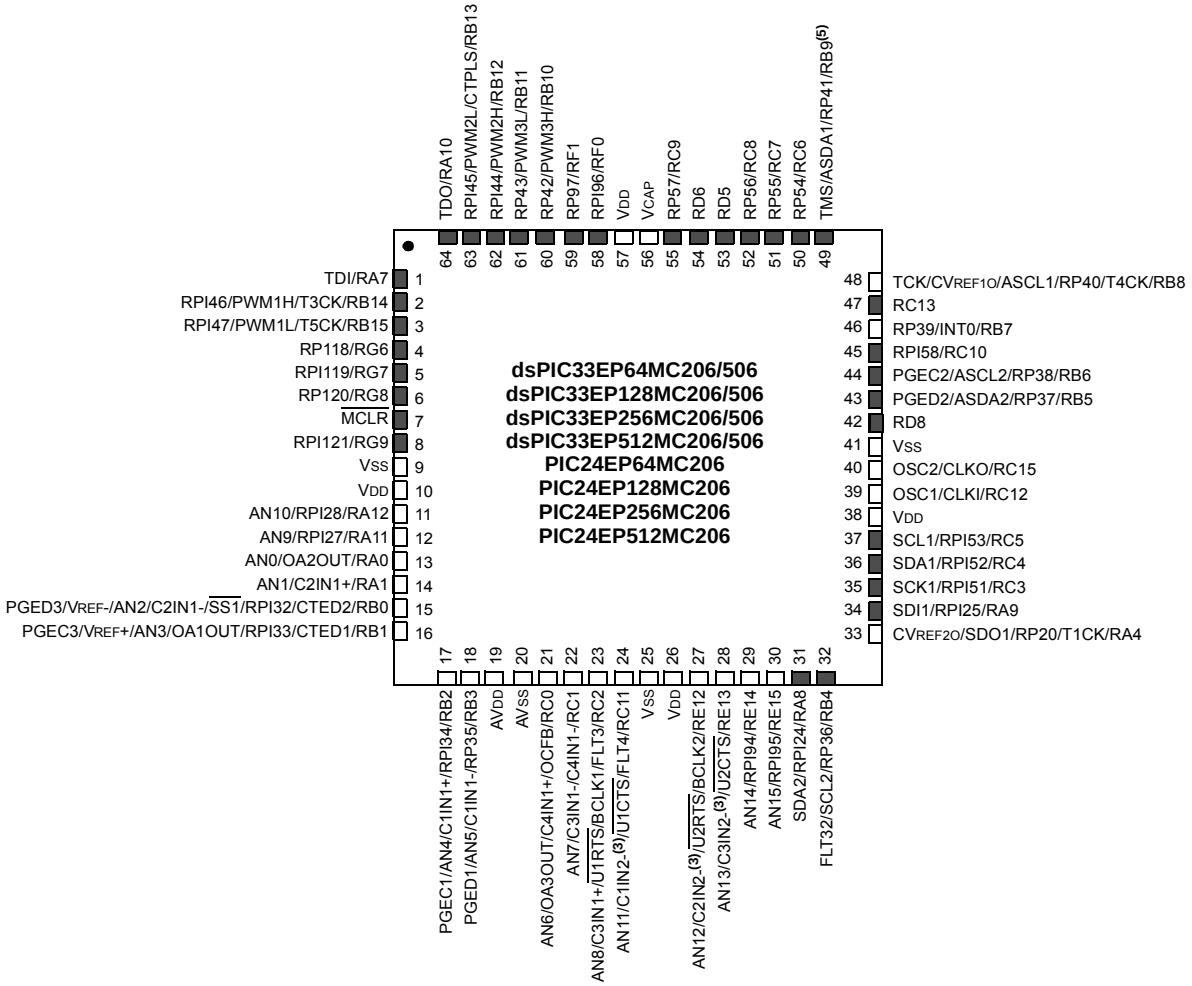

Note 1: The RPn/RPIn pins can be used by any remappable peripheral with some limitation. See **Section 11.4 "Peripheral Pin Select (PPS)"** for available peripherals and for information on limitations.

2: Every I/O port pin (RAx-RGx) can be used as a Change Notification pin (CNAx-CNGx). See **Section 11.0 "I/O Ports"** for more information.

3: This pin is not available as an input when OPMODE (CMxCON<10>) = 1.

4: The metal pad at the bottom of the device is not connected to any pins and is recommended to be connected to VSS externally.

5: There is an internal pull-up resistor connected to the TMS pin when the JTAG interface is active. See the JTAGEN bit field in Table 27-2.

REGISTER 3-1: SR: CPU STATUS REGISTER (CONTINUED)

bit 7-5 **IPL<2:0>:** CPU Interrupt Priority Level Status bits(2,3)

111 = CPU Interrupt Priority Level is 7 (15); user interrupts are disabled
110 = CPU Interrupt Priority Level is 6 (14)
101 = CPU Interrupt Priority Level is 5 (13)
100 = CPU Interrupt Priority Level is 4 (12)
011 = CPU Interrupt Priority Level is 3 (11)
010 = CPU Interrupt Priority Level is 2 (10)
001 = CPU Interrupt Priority Level is 1 (9)
000 = CPU Interrupt Priority Level is 0 (8)

bit 4 **RA:** REPEAT Loop Active bit

1 = REPEAT loop in progress
0 = REPEAT loop not in progress

bit 3 **N:** MCU ALU Negative bit

1 = Result was negative
0 = Result was non-negative (zero or positive)

bit 2 **OV:** MCU ALU Overflow bit

This bit is used for signed arithmetic (2's complement). It indicates an overflow of the magnitude that causes the sign bit to change state.
1 = Overflow occurred for signed arithmetic (in this arithmetic operation)
0 = No overflow occurred

bit 1 **Z:** MCU ALU Zero bit

1 = An operation that affects the Z bit has set it at some time in the past
0 = The most recent operation that affects the Z bit has cleared it (i.e., a non-zero result)

bit 0 **C:** MCU ALU Carry/$\overline{\text{Borrow}}$ bit

1 = A carry-out from the Most Significant bit of the result occurred
0 = No carry-out from the Most Significant bit of the result occurred

Note 1: This bit is available on dsPIC33EPXXXMC20X/50X and dsPIC33EPXXXGP50X devices only.

2: The IPL<2:0> bits are concatenated with the IPL<3> bit (CORCON<3>) to form the CPU Interrupt Priority Level. The value in parentheses indicates the IPL, if IPL<3> = 1. User interrupts are disabled when IPL<3> = 1.

3: The IPL<2:0> Status bits are read-only when the NSTDIS bit (INTCON1<15>) = 1.

4: A data write to the SR register can modify the SA and SB bits by either a data write to SA and SB or by clearing the SAB bit. To avoid a possible SA or SB bit write race condition, the SA and SB bits should not be modified using bit operations.

TABLE 4-24: CRC REGISTER MAP

File Name	Addr.	Bit 15	Bit 14	Bit 13	Bit 12	Bit 11	Bit 10	Bit 9	Bit 8	Bit 7	Bit 6	Bit 5	Bit 4	Bit 3	Bit 2	Bit 1	Bit 0	All Resets
CRCCON1	0640	CRCEN	—	CSIDL	VWORD<4:0>					CRCFUL	CRCMPT	CRCISEL	CRCGO	LENDIAN	—	—	—	0000
CRCCON2	0642	—	—	—	DWIDTH<4:0>					—	—	—	PLEN<4:0>					0000
CRCXORL	0644	X<15:1>															—	0000
CRCXORH	0646	X<31:16>																0000
CRCDATL	0648	CRC Data Input Low Word																0000
CRCDATH	064A	CRC Data Input High Word																0000
CRCWDATL	064C	CRC Result Low Word																0000
CRCWDATH	064E	CRC Result High Word																0000

Legend: — = unimplemented, read as '0'. Shaded bits are not used in the operation of the programmable CRC module.

TABLE 4-25: PERIPHERAL PIN SELECT OUTPUT REGISTER MAP FOR dsPIC33EPXXXGP/MC202/502 AND PIC24EPXXXGP/MC202 DEVICES ONLY

File Name	Addr.	Bit 15	Bit 14	Bit 13	Bit 12	Bit 11	Bit 10	Bit 9	Bit 8	Bit 7	Bit 6	Bit 5	Bit 4	Bit 3	Bit 2	Bit 1	Bit 0	All Resets
RPOR0	0680	—	—	RP35R<5:0>						—	—	RP20R<5:0>						0000
RPOR1	0682	—	—	RP37R<5:0>						—	—	RP36R<5:0>						0000
RPOR2	0684	—	—	RP39R<5:0>						—	—	RP38R<5:0>						0000
RPOR3	0686	—	—	RP41R<5:0>						—	—	RP40R<5:0>						0000
RPOR4	0688	—	—	RP43R<5:0>						—	—	RP42R<5:0>						0000

Legend: — = unimplemented, read as '0'. Reset values are shown in hexadecimal.

TABLE 4-26: PERIPHERAL PIN SELECT OUTPUT REGISTER MAP FOR dsPIC33EPXXXGP/MC203/503 AND PIC24EPXXXGP/MC203 DEVICES ONLY

File Name	Addr.	Bit 15	Bit 14	Bit 13	Bit 12	Bit 11	Bit 10	Bit 9	Bit 8	Bit 7	Bit 6	Bit 5	Bit 4	Bit 3	Bit 2	Bit 1	Bit 0	All Resets
RPOR0	0680	—	—	RP35R<5:0>						—	—	RP20R<5:0>						0000
RPOR1	0682	—	—	RP37R<5:0>						—	—	RP36R<5:0>						0000
RPOR2	0684	—	—	RP39R<5:0>						—	—	RP38R<5:0>						0000
RPOR3	0686	—	—	RP41R<5:0>						—	—	RP40R<5:0>						0000
RPOR4	0688	—	—	RP43R<5:0>						—	—	RP42R<5:0>						0000
RPOR5	068A	—	—	—	—	—	—	—	—	—	—	—	—	—	—	—	—	0000
RPOR6	068C	—	—	—	—	—	—	—	—	—	—	RP56R<5:0>						0000

Legend: — = unimplemented, read as '0'. Reset values are shown in hexadecimal.

© 2011-2013 Microchip Technology Inc.

8.0 DIRECT MEMORY ACCESS (DMA)

Note 1: This data sheet summarizes the features of the dsPIC33EPXXXGP50X, dsPIC33EPXXXMC20X/50X and PIC24EPXXXGP/MC20X families of devices. It is not intended to be a comprehensive reference source. To complement the information in this data sheet, refer to **"Direct Memory Access (DMA)"** (DS70348) in the "*dsPIC33/PIC24 Family Reference Manual*", which is available from the Microchip web site (www.microchip.com).

2: Some registers and associated bits described in this section may not be available on all devices. Refer to **Section 4.0 "Memory Organization"** in this data sheet for device-specific register and bit information.

The DMA Controller transfers data between Peripheral Data registers and Data Space SRAM

In addition, DMA can access the entire data memory space. The Data Memory Bus Arbiter is utilized when either the CPU or DMA attempts to access SRAM, resulting in potential DMA or CPU stalls.

The DMA Controller supports 4 independent channels. Each channel can be configured for transfers to or from selected peripherals. Some of the peripherals supported by the DMA Controller include:

- ECAN™
- Analog-to-Digital Converter (ADC)
- Serial Peripheral Interface (SPI)
- UART
- Input Capture
- Output Compare

Refer to Table 8-1 for a complete list of supported peripherals.

FIGURE 8-1: DMA CONTROLLER MODULE

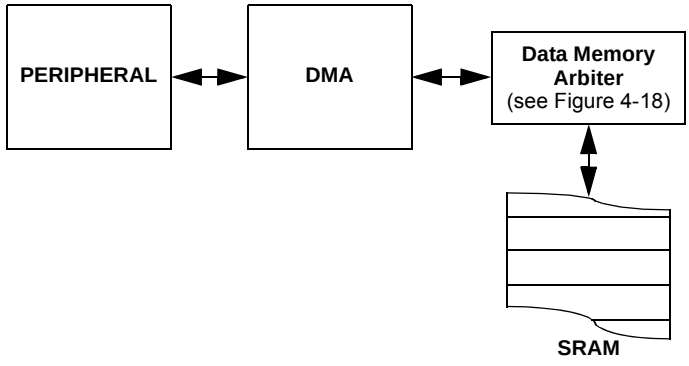

9.0 OSCILLATOR CONFIGURATION

Note 1: This data sheet summarizes the features of the dsPIC33EPXXXGP50X, dsPIC33EPXXXMC20X/50X and PIC24EPXXXGP/MC20X families of devices. It is not intended to be a comprehensive reference source. To complement the information in this data sheet, refer to **"Oscillator"** (DS70580) in the "*dsPIC33/PIC24 Family Reference Manual*", which is available from the Microchip web site (www.microchip.com).

2: Some registers and associated bits described in this section may not be available on all devices. Refer to **Section 4.0 "Memory Organization"** in this data sheet for device-specific register and bit information.

The dsPIC33EPXXXGP50X, dsPIC33EPXXXMC20X/50X and PIC24EPXXXGP/MC20X oscillator system provides:

- On-chip Phase-Locked Loop (PLL) to boost internal operating frequency on select internal and external oscillator sources
- On-the-fly clock switching between various clock sources
- Doze mode for system power savings
- Fail-Safe Clock Monitor (FSCM) that detects clock failure and permits safe application recovery or shutdown
- Configuration bits for clock source selection

A simplified diagram of the oscillator system is shown in Figure 9-1.

FIGURE 9-1: OSCILLATOR SYSTEM DIAGRAM

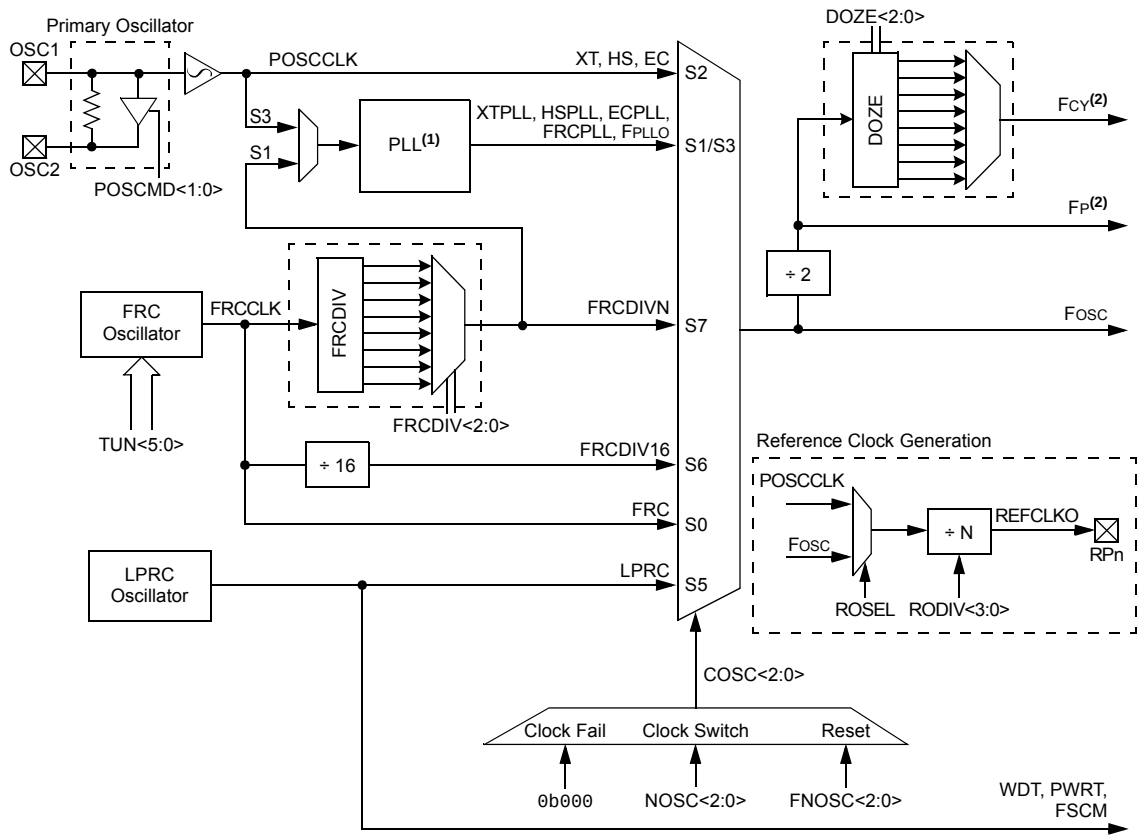

Note 1: See Figure 9-2 for PLL details.

2: The term, FP, refers to the clock source for all peripherals, while FCY refers to the clock source for the CPU. Throughout this document, FCY and FP are used interchangeably, except in the case of Doze mode. FP and FCY will be different when Doze mode is used with a doze ratio of 1:2 or lower.

REGISTER 10-2: PMD2: PERIPHERAL MODULE DISABLE CONTROL REGISTER 2

U-0	U-0	U-0	U-0	R/W-0	R/W-0	R/W-0	R/W-0
—	—	—	—	IC4MD	IC3MD	IC2MD	IC1MD
bit 15							bit 8

U-0	U-0	U-0	U-0	R/W-0	R/W-0	R/W-0	R/W-0
—	—	—	—	OC4MD	OC3MD	OC2MD	OC1MD
bit 7							bit 0

Legend:			
R = Readable bit	W = Writable bit	U = Unimplemented bit, read as ‘0’	
-n = Value at POR	‘1’ = Bit is set	‘0’ = Bit is cleared	x = Bit is unknown

bit 15-12 **Unimplemented:** Read as ‘0’

bit 11 **IC4MD:** Input Capture 4 Module Disable bit
1 = Input Capture 4 module is disabled
0 = Input Capture 4 module is enabled

bit 10 **IC3MD:** Input Capture 3 Module Disable bit
1 = Input Capture 3 module is disabled
0 = Input Capture 3 module is enabled

bit 9 **IC2MD:** Input Capture 2 Module Disable bit
1 = Input Capture 2 module is disabled
0 = Input Capture 2 module is enabled

bit 8 **IC1MD:** Input Capture 1 Module Disable bit
1 = Input Capture 1 module is disabled
0 = Input Capture 1 module is enabled

bit 7-4 **Unimplemented:** Read as ‘0’

bit 3 **OC4MD:** Output Compare 4 Module Disable bit
1 = Output Compare 4 module is disabled
0 = Output Compare 4 module is enabled

bit 2 **OC3MD:** Output Compare 3 Module Disable bit
1 = Output Compare 3 module is disabled
0 = Output Compare 3 module is enabled

bit 1 **OC2MD:** Output Compare 2 Module Disable bit
1 = Output Compare 2 module is disabled
0 = Output Compare 2 module is enabled

bit 0 **OC1MD:** Output Compare 1 Module Disable bit
1 = Output Compare 1 module is disabled
0 = Output Compare 1 module is enabled

© 2011-2013 Microchip Technology Inc.

REGISTER 11-15: RPINR37: PERIPHERAL PIN SELECT INPUT REGISTER 37 (dsPIC33EPXXXMC20X/50X AND PIC24EPXXXMC20X DEVICES ONLY)

U-0	R/W-0	R/W-0	R/W-0	R/W-0	R/W-0	R/W-0	R/W-0
—	SYNCI1R<6:0>						
bit 15							bit 8

U-0	U-0	U-0	U-0	U-0	U-0	U-0	U-0
—	—	—	—	—	—	—	—
bit 7							bit 0

Legend:			
R = Readable bit	W = Writable bit	U = Unimplemented bit, read as ‘0’	
-n = Value at POR	‘1’ = Bit is set	‘0’ = Bit is cleared	x = Bit is unknown

bit 15 **Unimplemented:** Read as ‘0’

bit 14-8 **SYNCI1R<6:0>:** Assign PWM Synchronization Input 1 to the Corresponding RPn Pin bits (see Table 11-2 for input pin selection numbers)

1111001 = Input tied to RPI121
.
.
.
0000001 = Input tied to CMP1
0000000 = Input tied to Vss

bit 7-0 **Unimplemented:** Read as ‘0’

© 2011-2013 Microchip Technology Inc.

REGISTER 11-17: RPINR39: PERIPHERAL PIN SELECT INPUT REGISTER 39 (dsPIC33EPXXXMC20X/50X AND PIC24EPXXXMC20X DEVICES ONLY)

U-0	R/W-0	R/W-0	R/W-0	R/W-0	R/W-0	R/W-0	R/W-0
—	DTCMP3R<6:0>						
bit 15							bit 8

U-0	R/W-0	R/W-0	R/W-0	R/W-0	R/W-0	R/W-0	R/W-0
—	DTCMP2R<6:0>						
bit 7							bit 0

Legend:			
R = Readable bit	W = Writable bit	U = Unimplemented bit, read as ‘0’	
-n = Value at POR	‘1’ = Bit is set	‘0’ = Bit is cleared	x = Bit is unknown

bit 15 **Unimplemented:** Read as ‘0’

bit 14-8 **DTCMP3R<6:0>:** Assign PWM Dead-Time Compensation Input 3 to the Corresponding RPn Pin bits (see Table 11-2 for input pin selection numbers)

1111001 = Input tied to RPI121
.
.
.
0000001 = Input tied to CMP1
0000000 = Input tied to Vss

bit 7 **Unimplemented:** Read as ‘0’

bit 6-0 **DTCMP2R<6:0>:** Assign PWM Dead-Time Compensation Input 2 to the Corresponding RPn Pin bits (see Table 11-2 for input pin selection numbers)

1111001 = Input tied to RPI121
.
.
.
0000001 = Input tied to CMP1
0000000 = Input tied to Vss

© 2011-2013 Microchip Technology Inc.

FIGURE 13-3: TYPE B/TYPE C TIMER PAIR BLOCK DIAGRAM (32-BIT TIMER)

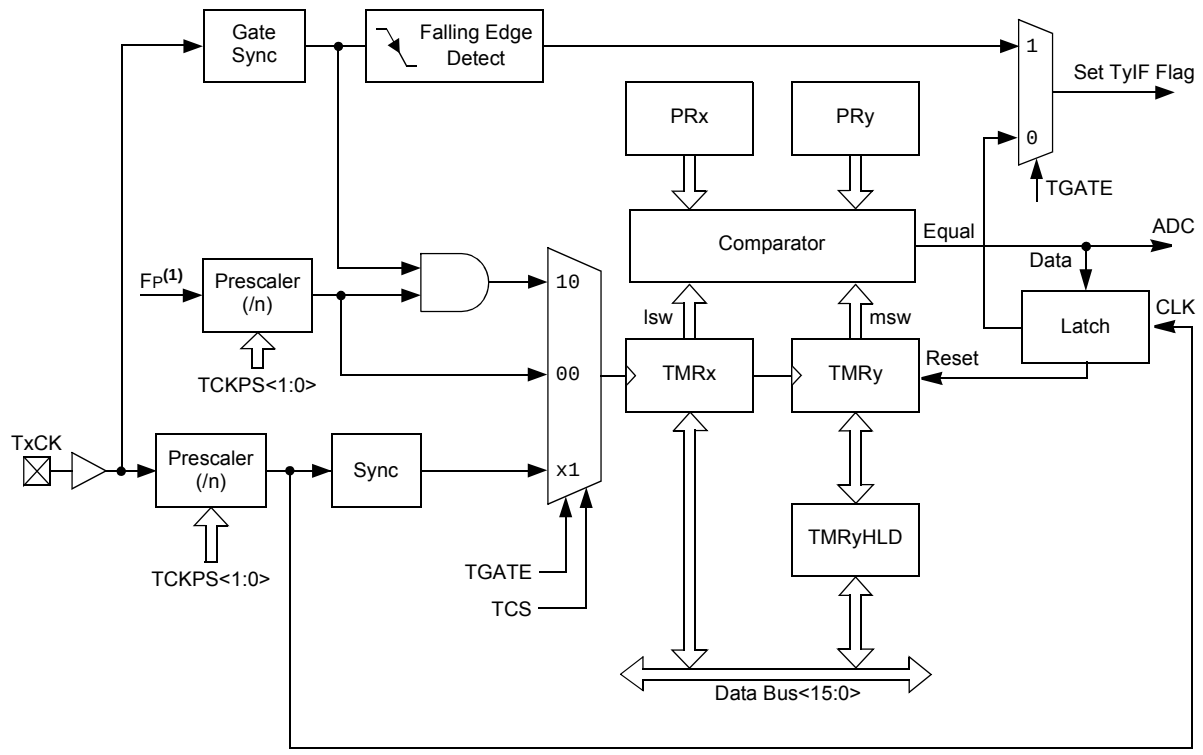

Note 1: The ADC trigger is available on the TMR3:TMR2 andTMR5:TMR4 32-bit timer pairs.
2: Timerx is a Type B timer (x = 2 and 4).
3: Timery is a Type C timer (y = 3 and 5).

13.1 Timerx/y Resources

Many useful resources are provided on the main product page of the Microchip web site for the devices listed in this data sheet. This product page, which can be accessed using this link, contains the latest updates and additional information.

Note:	In the event you are not able to access the product page using the link above, enter this URL in your browser: http://www.microchip.com/wwwproducts/Devices.aspx?dDocName=en555464

13.1.1 KEY RESOURCES

- **"Timers"** (DS70362) in the *"dsPIC33/PIC24 Family Reference Manual"*
- Code Samples
- Application Notes
- Software Libraries
- Webinars
- All Related *"dsPIC33/PIC24 Family Reference Manual"* Sections
- Development Tools

REGISTER 17-7: VEL1CNT: VELOCITY COUNTER 1 REGISTER

R/W-0	R/W-0	R/W-0	R/W-0	R/W-0	R/W-0	R/W-0	R/W-0
VELCNT<15:8>							
bit 15							bit 8

R/W-0	R/W-0	R/W-0	R/W-0	R/W-0	R/W-0	R/W-0	R/W-0
VELCNT<7:0>							
bit 7							bit 0

Legend:			
R = Readable bit	W = Writable bit	U = Unimplemented bit, read as ‘0’	
-n = Value at POR	‘1’ = Bit is set	‘0’ = Bit is cleared	x = Bit is unknown

bit 15-0 **VELCNT<15:0>:** Velocity Counter bits

REGISTER 17-8: INDX1CNTH: INDEX COUNTER 1 HIGH WORD REGISTER

R/W-0	R/W-0	R/W-0	R/W-0	R/W-0	R/W-0	R/W-0	R/W-0
INDXCNT<31:24>							
bit 15							bit 8

R/W-0	R/W-0	R/W-0	R/W-0	R/W-0	R/W-0	R/W-0	R/W-0
INDXCNT<23:16>							
bit 7							bit 0

Legend:			
R = Readable bit	W = Writable bit	U = Unimplemented bit, read as ‘0’	
-n = Value at POR	‘1’ = Bit is set	‘0’ = Bit is cleared	x = Bit is unknown

bit 15-0 **INDXCNT<31:16>:** High Word Used to Form 32-Bit Index Counter Register (INDX1CNT) bits

REGISTER 17-9: INDX1CNTL: INDEX COUNTER 1 LOW WORD REGISTER

R/W-0	R/W-0	R/W-0	R/W-0	R/W-0	R/W-0	R/W-0	R/W-0
INDXCNT<15:8>							
bit 15							bit 8

R/W-0	R/W-0	R/W-0	R/W-0	R/W-0	R/W-0	R/W-0	R/W-0
INDXCNT<7:0>							
bit 7							bit 0

Legend:			
R = Readable bit	W = Writable bit	U = Unimplemented bit, read as ‘0’	
-n = Value at POR	‘1’ = Bit is set	‘0’ = Bit is cleared	x = Bit is unknown

bit 15-0 **INDXCNT<15:0>:** Low Word Used to Form 32-Bit Index Counter Register (INDX1CNT) bits

NOTES:

© 2011-2013 Microchip Technology Inc.

48-Lead Ultra Thin Plastic Quad Flat, No Lead Package (MV) - 6x6 mm Body [UQFN]
With 0.40 mm Contact Length

Note: For the most current package drawings, please see the Microchip Packaging Specification located at http://www.microchip.com/packaging

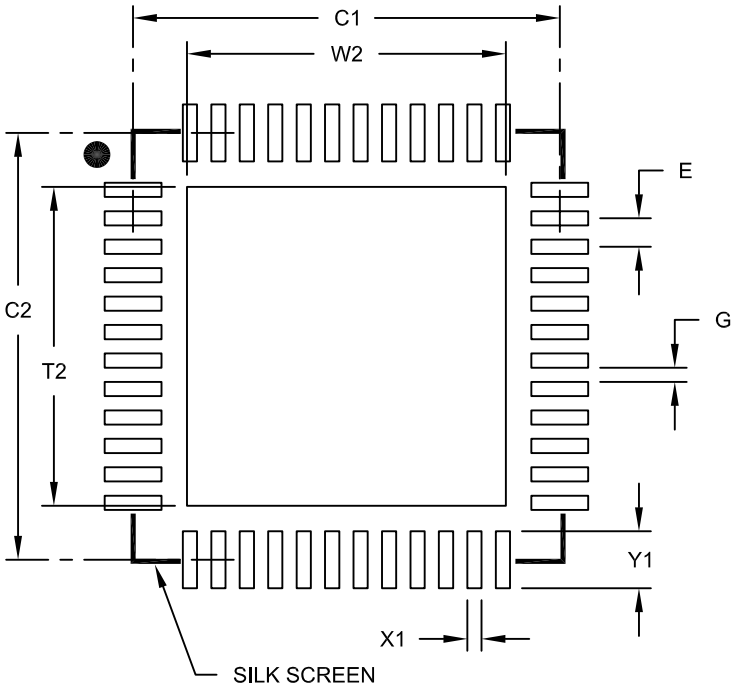

RECOMMENDED LAND PATTERN

Units		MILLIMETERS		
Dimension Limits		MIN	NOM	MAX
Contact Pitch	E		0.40 BSC	
Optional Center Pad Width	W2			4.45
Optional Center Pad Length	T2			4.45
Contact Pad Spacing	C1		6.00	
Contact Pad Spacing	C2		6.00	
Contact Pad Width (X28)	X1			0.20
Contact Pad Length (X28)	Y1			0.80
Distance Between Pads	G	0.20		

Notes:

1. Dimensioning and tolerancing per ASME Y14.5M
   BSC: Basic Dimension. Theoretically exact value shown without tolerances.

Microchip Technology Drawing No. C04-2153A

© 2011-2013 Microchip Technology Inc.

Revision E (April 2012)

This revision includes typographical and formatting changes throughout the data sheet text.

All other major changes are referenced by their respective section in Table A-3.

TABLE A-4: MAJOR SECTION UPDATES

Section Name	Update Description
"16-bit Microcontrollers and Digital Signal Controllers (up to 512-Kbyte Flash and 48-Kbyte SRAM) with High-Speed PWM, Op amps, and Advanced Analog"	The following 512-Kbyte devices were added to the General Purpose Families table (see Table 1): • PIC24EP512GP202 • PIC24EP512GP204 • PIC24EP512GP206 • dsPIC33EP512GP502 • dsPIC33EP512GP504 • dsPIC33EP512GP506 The following 512-Kbyte devices were added to the Motor Control Families table (see Table 2): • PIC24EP512MC202 • PIC24EP512MC204 • PIC24EP512MC206 • dsPIC33EP512MC202 • dsPIC33EP512MC204 • dsPIC33EP512MC206 • dsPIC33EP512MC502 • dsPIC33EP512MC504 • dsPIC33EP512MC506 Certain Pin Diagrams were updated to include the new 512-Kbyte devices.
Section 4.0 "Memory Organization"	Added a Program Memory Map for the new 512-Kbyte devices (see Figure 4-4). Added a Data Memory Map for the new dsPIC 512-Kbyte devices (see Figure 4-11). Added a Data Memory Map for the new PIC24 512-Kbyte devices (see Figure 4-16).
Section 7.0 "Interrupt Controller"	Updated the VECNUM bits in the INTTREG register (see Register 7-7).
Section 11.0 "I/O Ports"	Added tip 6 to **Section 11.5 "I/O Helpful Tips"**.
Section 27.0 "Special Features"	The following modifications were made to the Configuration Byte Register Map (see Table 27-1): • Added the column Device Memory Size (Kbytes) • Removed Notes 1 through 4 • Added addresses for the new 512-Kbyte devices
Section 30.0 "Electrical Characteristics"	Updated the Minimum value for Parameter DC10 (see Table 30-4). Added Power-Down Current (Ipd) parameters for the new 512-Kbyte devices (see Table 30-8). Updated the Minimum value for Parameter CM34 (see Table 30-53). Updated the Minimum and Maximum values and the Conditions for paramteer SY12 (see Table 30-22).

TyCON (Timer3 and Timer5 Control) 211
UxMODE (UARTx Mode) 283
UxSTA (UARTx Status and Control) 285
VEL1CNT (Velocity Counter 1) 259
Resets 123
Brown-out Reset (BOR) 123
Configuration Mismatch Reset (CM) 123
Illegal Condition Reset (IOPUWR) 123
Illegal Opcode 123
Security 123
Uninitialized W Register 123
Master Clear ($\overline{\text{MCLR}}$) Pin Reset 123
Power-on Reset (POR) 123
RESET Instruction (SWR) 123
Resources 124
Trap Conflict Reset (TRAPR) 123
Watchdog Timer Time-out Reset (WDTO) 123
Resources Required for Digital PFC 32, 34
Revision History 507

S

Serial Peripheral Interface (SPI) 265
Software Stack Pointer (SSP) 111
Special Features of the CPU 379
SPI
Control Registers 268
Helpful Tips 267
Resources 267

T

Temperature and Voltage Specifications
AC 413, 471
Thermal Operating Conditions 402
Thermal Packaging Characteristics 402
Timer1 203
Control Register 205
Resources 204
Timer2/3 and Timer4/5 207
Control Registers 210
Resources 209
Timing Diagrams
10-Bit ADC Conversion (CHPS<1:0> = 01, SIMSAM = 0, ASAM = 0, SSRC<2:0> = 000, SSRCG = 0) 464
10-Bit ADC Conversion (CHPS<1:0> = 01, SIMSAM = 0, ASAM = 1, SSRC<2:0> = 111, SSRCG = 0, SAMC<4:0> = 00010) 464
12-Bit ADC Conversion (ASAM = 0, SSRC<2:0> = 000, SSRCG = 0) 462
BOR and Master Clear Reset 416
ECANx I/O 454
External Clock 414
High-Speed PWMx Fault 422
High-Speed PWMx Module 422
I/O Characteristics 416
I2Cx Bus Data (Master Mode) 450
I2Cx Bus Data (Slave Mode) 452
I2Cx Bus Start/Stop Bits (Master Mode) 450
I2Cx Bus Start/Stop Bits (Slave Mode) 452
Input Capture x (ICx) 420
OCx/PWMx 421
Output Compare x (OCx) 421
QEA/QEB Input 424
QEI Module Index Pulse 425
SPI1 Master Mode (Full-Duplex, CKE = 0, CKP = x, SMP = 1) 441
SPI1 Master Mode (Full-Duplex, CKE = 1, CKP = x, SMP = 1) 440
SPI1 Master Mode (Half-Duplex, Transmit Only, CKE = 0) 438
SPI1 Master Mode (Half-Duplex, Transmit Only, CKE = 1) 439
SPI1 Slave Mode (Full-Duplex, CKE = 0, CKP = 0, SMP = 0) 448
SPI1 Slave Mode (Full-Duplex, CKE = 0, CKP = 1, SMP = 0) 446
SPI1 Slave Mode (Full-Duplex, CKE = 1, CKP = 0, SMP = 0) 442
SPI1 Slave Mode (Full-Duplex, CKE = 1, CKP = 1, SMP = 0) 444
SPI2 Master Mode (Full-Duplex, CKE = 0, CKP = x, SMP = 1) 429
SPI2 Master Mode (Full-Duplex, CKE = 1, CKP = x, SMP = 1) 428
SPI2 Master Mode (Half-Duplex, Transmit Only, CKE = 0) 426
SPI2 Master Mode (Half-Duplex, Transmit Only, CKE = 1) 427
SPI2 Slave Mode (Full-Duplex, CKE = 0, CKP = 0, SMP = 0) 436
SPI2 Slave Mode (Full-Duplex, CKE = 0, CKP = 1, SMP = 0) 434
SPI2 Slave Mode (Full-Duplex, CKE = 1, CKP = 0, SMP = 0) 430
SPI2 Slave Mode (Full-Duplex, CKE = 1, CKP = 1, SMP = 0) 432
Timer1-Timer5 External Clock 418
TimerQ (QEI Module) External Clock 423
UARTx I/O 454

U

Universal Asynchronous Receiver
Transmitter (UART) 281
Control Registers 283
Helpful Tips 282
Resources 282
User ID Words 384

V

Voltage Regulator (On-Chip) 384

W

Watchdog Timer (WDT) 379, 385
Programming Considerations 385
WWW Address 524
WWW, On-Line Support 23