Welcome to E-XFL.COM

What is "Embedded - Microcontrollers"?

"Embedded - Microcontrollers" refer to small, integrated circuits designed to perform specific tasks within larger systems. These microcontrollers are essentially compact computers on a single chip, containing a processor core, memory, and programmable input/output peripherals. They are called "embedded" because they are embedded within electronic devices to control various functions, rather than serving as standalone computers. Microcontrollers are crucial in modern electronics, providing the intelligence and control needed for a wide range of applications.

Applications of "Embedded - Microcontrollers"

Details	
Product Status	Obsolete
Core Processor	-
Core Size	-
Speed	-
Connectivity	-
Peripherals	-
Number of I/O	-
Program Memory Size	-
Program Memory Type	-
EEPROM Size	-
RAM Size	-
Voltage - Supply (Vcc/Vdd)	-
Data Converters	-
Oscillator Type	-
Operating Temperature	-
Mounting Type	-
Package / Case	-
Supplier Device Package	-
Purchase URL	https://www.e-xfl.com/product-detail/renesas-electronics-america/upd70f3033bgc-8eu-a

Notice

1. All information included in this document is current as of the date this document is issued. Such information, however, is subject to change without any prior notice. Before purchasing or using any Renesas Electronics products listed herein, please confirm the latest product information with a Renesas Electronics sales office. Also, please pay regular and careful attention to additional and different information to be disclosed by Renesas Electronics such as that disclosed through our website.
2. Renesas Electronics does not assume any liability for infringement of patents, copyrights, or other intellectual property rights of third parties by or arising from the use of Renesas Electronics products or technical information described in this document. No license, express, implied or otherwise, is granted hereby under any patents, copyrights or other intellectual property rights of Renesas Electronics or others.
3. You should not alter, modify, copy, or otherwise misappropriate any Renesas Electronics product, whether in whole or in part.
4. Descriptions of circuits, software and other related information in this document are provided only to illustrate the operation of semiconductor products and application examples. You are fully responsible for the incorporation of these circuits, software, and information in the design of your equipment. Renesas Electronics assumes no responsibility for any losses incurred by you or third parties arising from the use of these circuits, software, or information.
5. When exporting the products or technology described in this document, you should comply with the applicable export control laws and regulations and follow the procedures required by such laws and regulations. You should not use Renesas Electronics products or the technology described in this document for any purpose relating to military applications or use by the military, including but not limited to the development of weapons of mass destruction. Renesas Electronics products and technology may not be used for or incorporated into any products or systems whose manufacture, use, or sale is prohibited under any applicable domestic or foreign laws or regulations.
6. Renesas Electronics has used reasonable care in preparing the information included in this document, but Renesas Electronics does not warrant that such information is error free. Renesas Electronics assumes no liability whatsoever for any damages incurred by you resulting from errors in or omissions from the information included herein.
7. Renesas Electronics products are classified according to the following three quality grades: "Standard", "High Quality", and "Specific". The recommended applications for each Renesas Electronics product depends on the product's quality grade, as indicated below. You must check the quality grade of each Renesas Electronics product before using it in a particular application. You may not use any Renesas Electronics product for any application categorized as "Specific" without the prior written consent of Renesas Electronics. Further, you may not use any Renesas Electronics product for any application for which it is not intended without the prior written consent of Renesas Electronics. Renesas Electronics shall not be in any way liable for any damages or losses incurred by you or third parties arising from the use of any Renesas Electronics product for an application categorized as "Specific" or for which the product is not intended where you have failed to obtain the prior written consent of Renesas Electronics. The quality grade of each Renesas Electronics product is "Standard" unless otherwise expressly specified in a Renesas Electronics data sheets or data books, etc.

   "Standard": Computers; office equipment; communications equipment; test and measurement equipment; audio and visual equipment; home electronic appliances; machine tools; personal electronic equipment; and industrial robots.

   "High Quality": Transportation equipment (automobiles, trains, ships, etc.); traffic control systems; anti-disaster systems; anti-crime systems; safety equipment; and medical equipment not specifically designed for life support.

   "Specific": Aircraft; aerospace equipment; submersible repeaters; nuclear reactor control systems; medical equipment or systems for life support (e.g. artificial life support devices or systems), surgical implantations, or healthcare intervention (e.g. excision, etc.), and any other applications or purposes that pose a direct threat to human life.
8. You should use the Renesas Electronics products described in this document within the range specified by Renesas Electronics, especially with respect to the maximum rating, operating supply voltage range, movement power voltage range, heat radiation characteristics, installation and other product characteristics. Renesas Electronics shall have no liability for malfunctions or damages arising out of the use of Renesas Electronics products beyond such specified ranges.
9. Although Renesas Electronics endeavors to improve the quality and reliability of its products, semiconductor products have specific characteristics such as the occurrence of failure at a certain rate and malfunctions under certain use conditions. Further, Renesas Electronics products are not subject to radiation resistance design. Please be sure to implement safety measures to guard them against the possibility of physical injury, and injury or damage caused by fire in the event of the failure of a Renesas Electronics product, such as safety design for hardware and software including but not limited to redundancy, fire control and malfunction prevention, appropriate treatment for aging degradation or any other appropriate measures. Because the evaluation of microcomputer software alone is very difficult, please evaluate the safety of the final products or system manufactured by you.
10. Please contact a Renesas Electronics sales office for details as to environmental matters such as the environmental compatibility of each Renesas Electronics product. Please use Renesas Electronics products in compliance with all applicable laws and regulations that regulate the inclusion or use of controlled substances, including without limitation, the EU RoHS Directive. Renesas Electronics assumes no liability for damages or losses occurring as a result of your noncompliance with applicable laws and regulations.
11. This document may not be reproduced or duplicated, in any form, in whole or in part, without prior written consent of Renesas Electronics.
12. Please contact a Renesas Electronics sales office if you have any questions regarding the information contained in this document or Renesas Electronics products, or if you have any other inquiries.

(Note 1) "Renesas Electronics" as used in this document means Renesas Electronics Corporation and also includes its majority-owned subsidiaries.

(Note 2) "Renesas Electronics product(s)" means any product developed or manufactured by or for Renesas Electronics.

DATA SHEET

NEC

MOS INTEGRATED CIRCUIT

PD703031A, 703031AY, 703033A, 703033AY, 70F3033A, 70F3033AY

V850/SB1™

32-BIT SINGLE-CHIP MICROCONTROLLERS

DESCRIPTION

The PD703031A, 703031AY, 703033A, 703033AY, 70F3033A, and 70F3033AY (V850/SB1) are 32-bit single-chip microcontrollers of the V850 Series™ for AV equipment. 32-bit CPU, ROM, RAM, timer/counters, serial interfaces, A/D converter, DMA controller, and so on are integrated on a single chip.

The PD70F3033A and 70F3033AY have flash memory in place of the internal mask ROM of the PD703033A and 703033AY. Because flash memory allows the program to be written and erased electrically with the device mounted on the board, these products are ideal for the evaluation stages of system development, small-scale production, and rapid development of new products.

The PD703032A, 703032AY, 70F3032A, 70F3032AY, products with a different ROM/RAM size are also available.

Detailed function descriptions are provided in the following user's manuals. Be sure to read them before designing.

V850/SB1, V850/SB2™ Hardware User's Manual: U13850E
V850 Series Architecture User's Manual: U10243E

FEATURES

- Number of instructions: 74
- Minimum instruction execution time: 50 ns (@ internal 20 MHz operation)
- General-purpose registers: 32 bits 32 registers
- Instruction set: Signed multiplication, saturation operations, 32-bit shift instructions, bit manipulation instructions, load/store instructions
- Memory space: 16 MB linear address space
- Internal memory ROM: 128 KB (PD703031A, 703031AY: mask ROM)
  256 KB (PD703033A, 703033AY: mask ROM)
  256 KB (PD70F3033A, 70F3033AY: flash memory)
  RAM: 12 KB (PD703031A, 703031AY)
  16 KB (PD703033A, 703033AY, 70F3033A, 70F3033AY)
- Interrupt/exception: PD703031A, 703033A, 70F3033A (external: 8, internal: 31 sources, exception: 1 source)
  PD703031AY, 703033AY, 70F3033AY (external: 8, internal: 32 sources, exception: 1 source)
- I/O lines Total: 83
- Timer/counters: 16-bit timer (2 channels: TM0, TM1)
  8-bit timer (6 channels: TM2 to TM7)
- Watch timer: 1 channel
- Watchdog timer: 1 channel

The information in this document is subject to change without notice. Before using this document, please confirm that this is the latest version.
Not all devices/types available in every country. Please check with local NEC representative for availability and additional information.

Document No. U14734EJ3V0DS00 (3rd edition)
Date Published January 2002 N CP(K)
Printed in Japan

The mark ★ shows major revised points.

© NEC Corporation 2000

★ 3.1 Flash Memory Programming Mode (PD70F3033A, 70F3033AY only)

Write/erase characteristics (T_A = 10 to 85 C … K rank product,
T_A = 20 to +85 C … E rank product,
V_{DD} = AV_{DD} = BV_{DD} = EV_{DD} = 4.5 to 5.5 V, V_{SS} = AV_{SS} = BV_{SS} = EV_{SS} = 0 V)

Parameter	Symbol	Conditions	MIN.	TYP.	MAX.	Unit
V_{PP} power supply voltage	V_{PP2}	During flash memory programming	7.5	7.8	8.1	V
V_{DD} power supply current	I_{DD}	When V_{PP} = V_{PP2}, f_{XX} = 20 MHz			63	mA
V_{PP} power supply current	I_{PP}	V_{PP} = V_{PP2}			100	mA
Step erase time	t_{ER}	Note 1		0.2		s
Overall erase time per area	t_{ERA}	When the step erase time = 0.2 s, Note 2			20	s/area
Write-back time	t_{WB}	Note 3		1		ms
Number of write-backs per write-back command	C_{WB}	When the write-back time = 1 ms, Note 4			300	Count/write-back command
Number of erase/write-backs	C_{ERWB}				16	Count
Step writing time	t_{WR}	Note 5		20		s
Overall writing time per word	t_{WRW}	When the step writing time = 20 s (1 word = 4 bytes), Note 6	20		200	s/word
Number of rewrites per area	C_{ERWR}	1 erase + 1 write after erase = 1 rewrite, Note 7	Note 8			Count/area

Notes 1. The recommended setting value of the step erase time is 0.2 s.
2. The prewrite time prior to erasure and the erase verify time (write-back time) are not included.
3. The recommended setting value of the write-back time is 1 ms.
4. Write-back is executed once by the issuance of the write-back command. Therefore, the retry count must be the maximum value minus the number of commands issued.
5. The recommended setting value of the step writing time is 20 s.
6. 20 s is added to the actual writing time per word. The internal verify time during and after the writing is not included.
7. When writing initially to shipped products, it is counted as one rewrite for both “erase to write” and “write only”.

Example (P: Write, E: Erase)
Shipped product P E P E P: 3 rewrites
Shipped product E P E P E P: 3 rewrites

8. K rank product: 20 writes/area
E rank product: 100 writes/area

Remarks 1. When the PG-FP3 is used, a time parameter required for writing/erasing by downloading parameter files is automatically set. Do not change the settings unless otherwise specified.
2. Area 0 = 000000H to 01FFFFH
Area 1 = 020000H to 03FFFFH

100-PIN PLASTIC QFP (14x20)

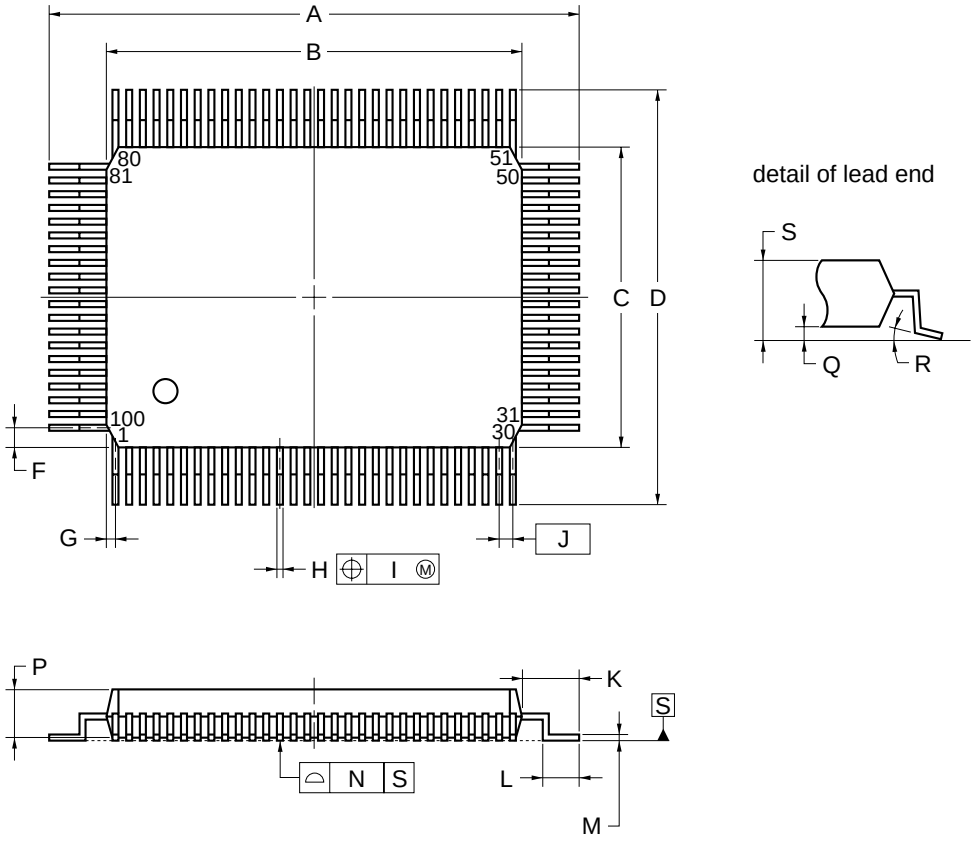

NOTE

Each lead centerline is located within 0.15 mm of its true position (T.P.) at maximum material condition.

ITEM	MILLIMETERS
A	23.6 0.4
B	20.0 0.2
C	14.0 0.2
D	17.6 0.4
F	0.8
G	0.6
H	0.30 0.10
I	0.15
J	0.65 (T.P.)
K	1.8 0.2
L	0.8 0.2
M	0.15 $^{0.10}_{0.05}$
N	0.10
P	2.7 0.1
Q	0.1 0.1
R	5 5
S	3.0 MAX.

P100GF-65-3BA1-4

Regional Information

Some information contained in this document may vary from country to country. Before using any NEC product in your application, please contact the NEC office in your country to obtain a list of authorized representatives and distributors. They will verify:

Device availability

Ordering information

Product release schedule

Availability of related technical literature

Development environment specifications (for example, specifications for third-party tools and components, host computers, power plugs, AC supply voltages, and so forth)

Network requirements

In addition, trademarks, registered trademarks, export restrictions, and other legal issues may also vary from country to country.

NEC Electronics Inc. (U.S.)
Santa Clara, California
Tel: 408-588-6000
800-366-9782
Fax: 408-588-6130
800-729-9288

NEC Electronics (Europe) GmbH
Duesseldorf, Germany
Tel: 0211-65 03 01
Fax: 0211-65 03 327

Branch The Netherlands
Eindhoven, The Netherlands
Tel: 040-244 58 45
Fax: 040-244 45 80

Branch Sweden
Taeby, Sweden
Tel: 08-63 80 820
Fax: 08-63 80 388

NEC Electronics (France) S.A.
Vélizy-Villacoublay, France
Tel: 01-3067-58-00
Fax: 01-3067-58-99

NEC Electronics (France) S.A.
Representaci ón en Espa ña
Madrid, Spain
Tel: 091-504-27-87
Fax: 091-504-28-60

NEC Electronics Italiana S.R.L.
Milano, Italy
Tel: 02-66 75 41
Fax: 02-66 75 42 99

NEC Electronics (UK) Ltd.
Milton Keynes, UK
Tel: 01908-691-133
Fax: 01908-670-290

NEC Electronics Hong Kong Ltd.
Hong Kong
Tel: 2886-9318
Fax: 2886-9022/9044

NEC Electronics Hong Kong Ltd.
Seoul Branch
Seoul, Korea
Tel: 02-528-0303
Fax: 02-528-4411

NEC Electronics Singapore Pte. Ltd.
Novena Square, Singapore
Tel: 253-8311
Fax: 250-3583

NEC Electronics Taiwan Ltd.
Taipei, Taiwan
Tel: 02-2719-2377
Fax: 02-2719-5951

NEC do Brasil S.A.
Electron Devices Division
Guarulhos-SP, Brasil
Tel: 11-6462-6810
Fax: 11-6462-6829

J01.12