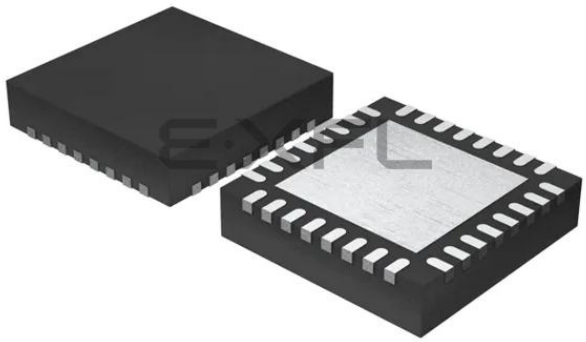

Welcome to E-XFL.COM

What is "Embedded - Microcontrollers"?

"Embedded - Microcontrollers" refer to small, integrated circuits designed to perform specific tasks within larger systems. These microcontrollers are essentially compact computers on a single chip, containing a processor core, memory, and programmable input/output peripherals. They are called "embedded" because they are embedded within electronic devices to control various functions, rather than serving as standalone computers. Microcontrollers are crucial in modern electronics, providing the intelligence and control needed for a wide range of applications.

Applications of "Embedded - Microcontrollers"

Details	
Product Status	Discontinued at Digi-Key
Core Processor	ARM® Cortex®-M3
Core Size	32-Bit Single-Core
Speed	32MHz
Connectivity	I²C, IrDA, SmartCard, SPI, UART/USART
Peripherals	Brown-out Detect/Reset, DMA, POR, PWM, WDT
Number of I/O	24
Program Memory Size	32KB (32K x 8)
Program Memory Type	FLASH
EEPROM Size	-
RAM Size	8K x 8
Voltage - Supply (Vcc/Vdd)	1.98V ~ 3.8V
Data Converters	A/D 4x12b; D/A 1x12b
Oscillator Type	Internal
Operating Temperature	-40°C ~ 85°C (TA)
Mounting Type	Surface Mount
Package / Case	32-VQFN Exposed Pad
Supplier Device Package	32-QFN (6x6)
Purchase URL	https://www.e-xfl.com/product-detail/silicon-labs/efm32g200f32-qfn32

3.2.4 EFM32G230

The features of the EFM32G230 is a subset of the feature set described in the EFM32G Reference Manual. The following table describes device specific implementation of the features.

Table 3.4. EFM32G230 Configuration Summary

Module	Configuration	Pin Connections
Cortex-M3	Full configuration	NA
DBG	Full configuration	DBG_SWCLK, DBG_SWDIO, DBG_SWO
MSC	Full configuration	NA
DMA	Full configuration	NA
RMU	Full configuration	NA
EMU	Full configuration	NA
CMU	Full configuration	CMU_OUT0, CMU_OUT1
WDOG	Full configuration	NA
PRS	Full configuration	NA
I2C0	Full configuration	I2C0_SDA, I2C0_SCL
USART0	Full configuration with IrDA	US0_TX, US0_RX. US0_CLK, US0_CS
USART1	Full configuration	US1_TX, US1_RX, US1_CLK, US1_CS
USART2	Full configuration	US2_TX, US2_RX, US2_CLK, US2_CS
LEUART0	Full configuration	LEU0_TX, LEU0_RX
LEUART1	Full configuration	LEU1_TX, LEU1_RX
TIMER0	Full configuration with DTI	TIM0_CC[2:0], TIM0_CDTI[2:0]
TIMER1	Full configuration	TIM1_CC[2:0]
TIMER2	Full configuration	TIM2_CC[2:0]
RTC	Full configuration	NA
LETIMER0	Full configuration	LET0_O[1:0]
PCNT0	Full configuration, 8-bit count register	PCNT0_S[1:0]
PCNT1	Full configuration, 8-bit count register	PCNT1_S[1:0]
PCNT2	Full configuration, 8-bit count register	PCNT2_S[1:0]
ACMP0	Full configuration	ACMP0_CH[7:0], ACMP0_O
ACMP1	Full configuration	ACMP1_CH[7:0], ACMP1_O
VCMP	Full configuration	NA
ADC0	Full configuration	ADC0_CH[7:0]
DAC0	Full configuration	DAC0_OUT[1:0]
AES	Full configuration	NA
GPIO	56 pins	Available pins are shown in Table 4.3 (p. 57)

3.3 Memory Map

The EFM32G memory map is shown in the figure below. RAM and Flash sizes are for the largest memory configuration.

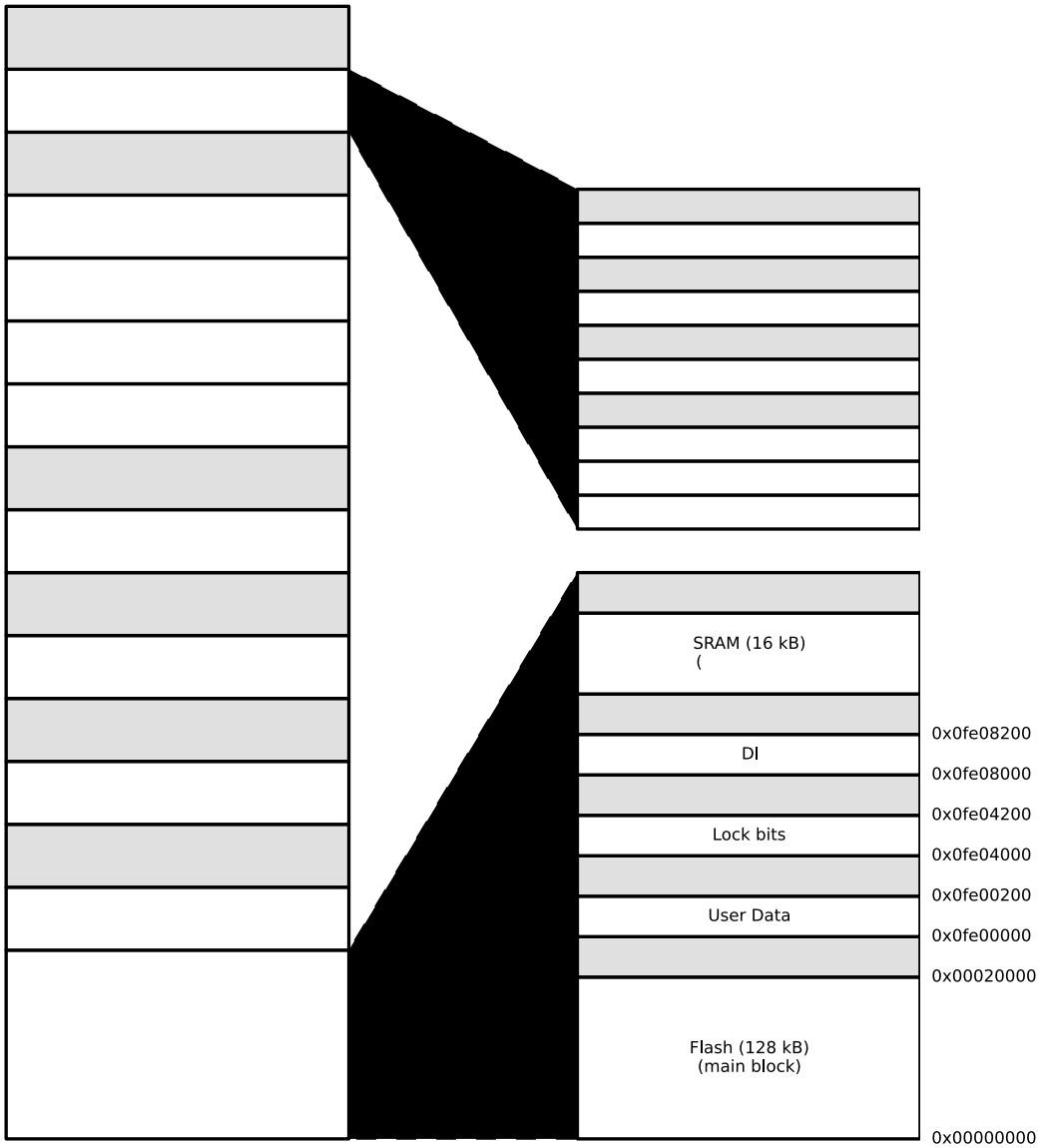

5.6 EFM32G290 (BGA112)

TQFP64 Pin# and Name		Pin Alternate Functionality / Description			
Pin #	Pin Name	Analog	Timers	Communication	Other
6	PA5	LCD_SEG18	TIM0_CDTI2 #0	LEU1_TX #1	
7	IOVDD_0	Digital IO power supply 0.			
8	VSS	Ground.			
9	PB3	LCD_SEG20	PCNT1_S0IN #1	US2_TX #1	
10	PB4	LCD_SEG21	PCNT1_S1IN #1	US2_RX #1	
11	PB5	LCD_SEG22		US2_CLK #1	
12	PB6	LCD_SEG23		US2_CS #1	
13	PC4	ACMP0_CH4	LETIM0_OUT0 #3 PCNT1_S0IN #0	US2_CLK #0	
14	PC5	ACMP0_CH5	LETIM0_OUT1 #3 PCNT1_S1IN #0	US2_CS #0	
15	PB7	LFXTAL_P		US1_CLK #0	
16	PB8	LFXTAL_N		US1_CS #0	
17	PA12	LCD_BCAP_P	TIM2_CC0 #1		
18	PA13	LCD_BCAP_N	TIM2_CC1 #1		
19	PA14	LCD_BEXT	TIM2_CC2 #1		
20	RESETn	Reset input, active low.To apply an external reset source to this pin, it is required to only drive this pin low during reset, and let the internal pull-up ensure that reset is released.			
21	PB11	DAC0_OUT0	LETIM0_OUT0 #1		
22	VSS	Ground.			
23	AVDD_1	Analog power supply 1.			
24	PB13	HFXTAL_P		LEU0_TX #1	
25	PB14	HFXTAL_N		LEU0_RX #1	
26	IOVDD_3	Digital IO power supply 3.			
27	AVDD_0	Analog power supply 0.			
28	PD0	ADC0_CH0	PCNT2_S0IN #0	US1_TX #1	
29	PD1	ADC0_CH1	TIM0_CC0 #3 PCNT2_S1IN #0	US1_RX #1	
30	PD2	ADC0_CH2	TIM0_CC1 #3	US1_CLK #1	
31	PD3	ADC0_CH3	TIM0_CC2 #3	US1_CS #1	
32	PD4	ADC0_CH4		LEU0_TX #0	
33	PD5	ADC0_CH5		LEU0_RX #0	
34	PD6	ADC0_CH6	LETIM0_OUT0 #0	I2C0_SDA #1	
35	PD7	ADC0_CH7	LETIM0_OUT1 #0	I2C0_SCL #1	
36	PD8				CMU_CLK1 #1
37	PC6	ACMP0_CH6		LEU1_TX #0 I2C0_SDA #2	

5.8.3 GPIO Pinout Overview

The specific GPIO pins available in EFM32G842 is shown in the following table. Each GPIO port is organized as 16-bit ports indicated by letters A through F, and the individual pin on this port is indicated by a number from 15 down to 0.

Table 5.24. GPIO Pinout

Port	Pin 15	Pin 14	Pin 13	Pin 12	Pin 11	Pin 10	Pin 9	Pin 8	Pin 7	Pin 6	Pin 5	Pin 4	Pin 3	Pin 2	Pin 1	Pin 0
Port A	—	PA14	PA13	PA12	—	—	—	—	—	—	PA5	PA4	PA3	PA2	PA1	PA0
Port B	—	PB14	PB13	—	PB11	—	—	PB8	PB7	PB6	PB5	PB4	PB3	—	—	—
Port C	PC15	PC14	PC13	PC12	—	—	—	—	PC7	PC6	PC5	PC4	—	—	—	—
Port D	—	—	—	—	—	—	—	PD8	PD7	PD6	PD5	PD4	PD3	PD2	PD1	PD0
Port E	PE15	PE14	PE13	PE12	PE11	PE10	PE9	PE8	PE7	PE6	PE5	PE4	—	—	—	—
Port F	—	—	—	—	—	—	—	—	—	—	PF5	PF4	PF3	PF2	PF1	PF0

Alternate	LOCATION				
Functionality	0	1	2	3	Description
EBI_ARDY	PF2				External Bus Interface (EBI) Hardware Ready Control input.
EBI_CS0	PD9				External Bus Interface (EBI) Chip Select output 0.
EBI_CS1	PD10				External Bus Interface (EBI) Chip Select output 1.
EBI_CS2	PD11				External Bus Interface (EBI) Chip Select output 2.
EBI_CS3	PD12				External Bus Interface (EBI) Chip Select output 3.
EBI_REn	PF5				External Bus Interface (EBI) Read Enable output.
EBI_WEn	PF4				External Bus Interface (EBI) Write Enable output.
HFXTAL_N	PB14				High Frequency Crystal negative pin. Also used as external optional clock input pin.
HFXTAL_P	PB13				High Frequency Crystal positive pin.
I2C0_SCL	PA1	PD7	PC7		I2C0 Serial Clock Line input / output.
I2C0_SDA	PA0	PD6	PC6		I2C0 Serial Data input / output.
LCD_BCAP_N	PA13				LCD voltage booster (optional), boost capacitor, negative pin. If using the LCD voltage booster, connect a 22 nF capacitor between LCD_BCAP_N and LCD_BCAP_P.
LCD_BCAP_P	PA12				LCD voltage booster (optional), boost capacitor, positive pin. If using the LCD voltage booster, connect a 22 nF capacitor between LCD_BCAP_N and LCD_BCAP_P.
LCD_BEXT	PA14				LCD voltage booster (optional), boost output. If using the LCD voltage booster, connect a 1 uF capacitor between this pin and VSS. An external LCD voltage may also be applied to this pin if the booster is not enabled. If AVDD is used directly as the LCD supply voltage, this pin may be left unconnected or used as a GPIO.
LCD_COM0	PE4				LCD driver common line number 0.
LCD_COM1	PE5				LCD driver common line number 1.
LCD_COM2	PE6				LCD driver common line number 2.
LCD_COM3	PE7				LCD driver common line number 3.
LCD_SEG0	PF2				LCD segment line 0. Segments 0, 1, 2 and 3 are controlled by SEGEN0.
LCD_SEG1	PF3				LCD segment line 1. Segments 0, 1, 2 and 3 are controlled by SEGEN0.
LCD_SEG2	PF4				LCD segment line 2. Segments 0, 1, 2 and 3 are controlled by SEGEN0.
LCD_SEG3	PF5				LCD segment line 3. Segments 0, 1, 2 and 3 are controlled by SEGEN0.
LCD_SEG4	PE8				LCD segment line 4. Segments 4, 5, 6 and 7 are controlled by SEGEN1.
LCD_SEG5	PE9				LCD segment line 5. Segments 4, 5, 6 and 7 are controlled by SEGEN1.
LCD_SEG6	PE10				LCD segment line 6. Segments 4, 5, 6 and 7 are controlled by SEGEN1.

5.10 EFM32G890 (BGA112)

5.10.1 Pinout

The EFM32G890 pinout is shown in the following figure and table. Alternate locations are denoted by "#" followed by the location number (Multiple locations on the same pin are split with "/"). Alternate locations can be configured in the LOCATION bitfield in the *_ROUTE register in the module in question.

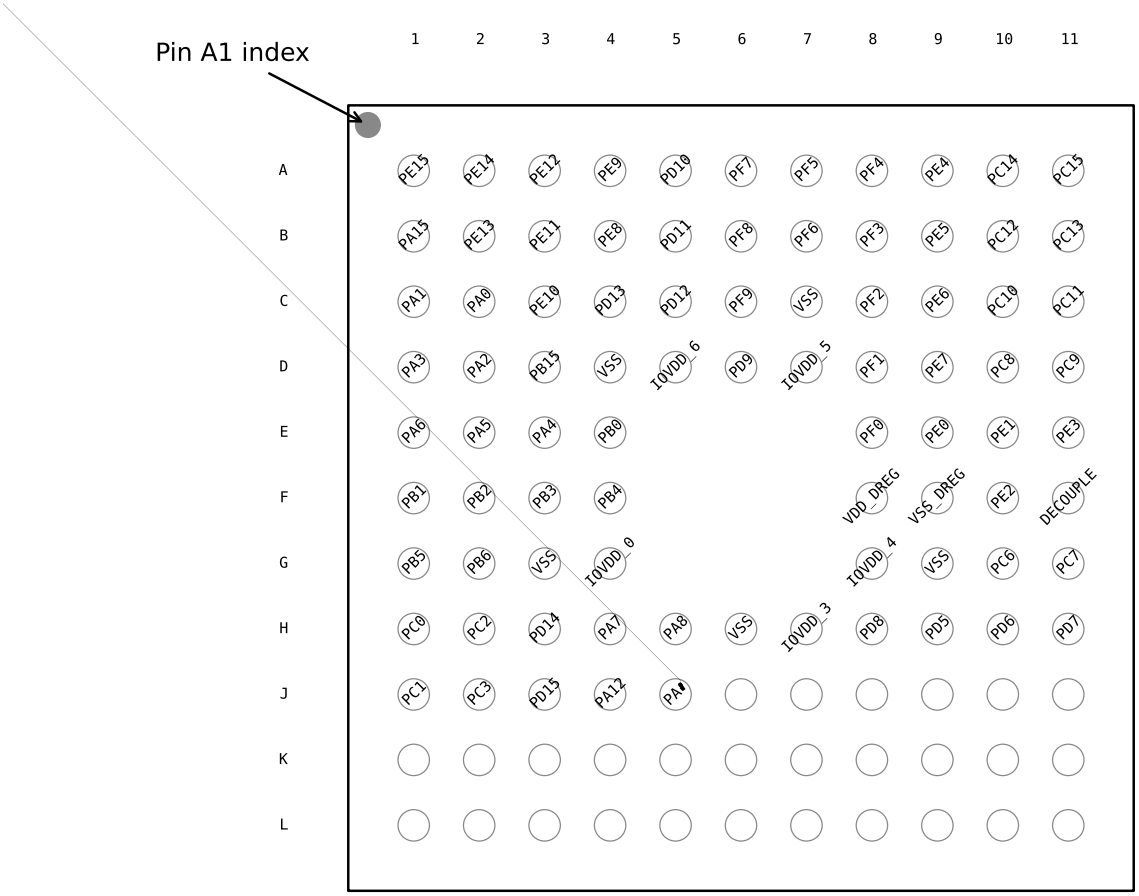

6. BGA112 Package Specifications

6.1 BGA112 Package Dimensions

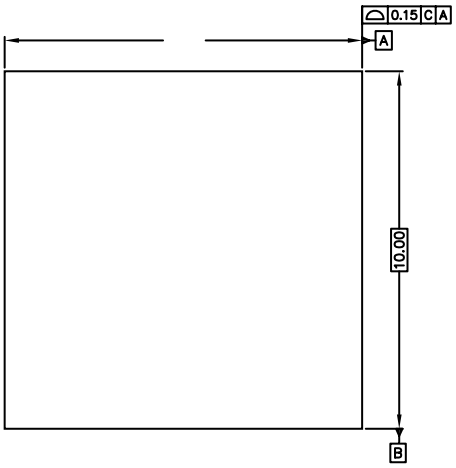

DIM	MIN	NOM	MAX	DIM	MIN	NOM	MAX
D	0.170	—	0.270	S1	—	4.500 BSC	—
E	0.950	—	1.050	V	—	9.000 BSC	—
F	0.170	—	0.230	V1	—	4.5000 BSC	—
G	—	0.500 BSC	—	W	—	0.200 BSC	—
H	0.050	—	0.150	AA	—	1.000BSC	—
J	0.090	—	0.200				
K	0.500	—	0.700				
L	0DEG	—	7DEG				

The TQFP48 Package is 7 by 7 mm in size and has a 0.5 mm pin pitch.

The TQFP48 Package uses Nickel-Palladium-Gold preplated leadframe.

All EFM32 packages are RoHS compliant and free of Bromine (Br) and Antimony (Sb).

For additional Quality and Environmental information, please see: http://www.silabs.com/support/quality/pages/default.aspx

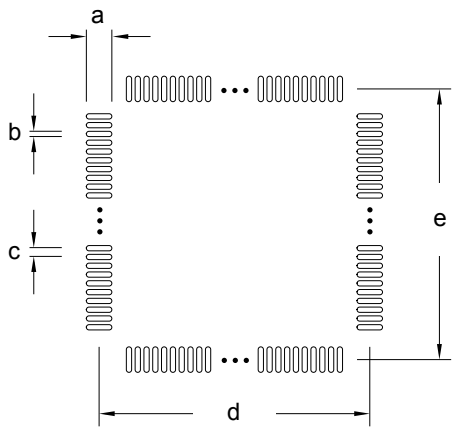

Figure 9.4. TQFP48 PCB Stencil Design

Table 9.4. TQFP48 PCB Stencil Design Dimensions (Dimensions in mm)

Symbol	Dim. (mm)
a	1.50
b	0.20
c	0.50
d	8.50
e	8.50

Note:

1. The drawings are not to scale.
2. All dimensions are in millimeters.
3. All drawings are subject to change without notice.
4. The PCB Land Pattern drawing is in compliance with IPC-7351B.
5. Stencil thickness 0.125 mm.
6. For detailed pin-positioning, see 5. Pin Definitions.

10.2 QFN64 PCB Layout

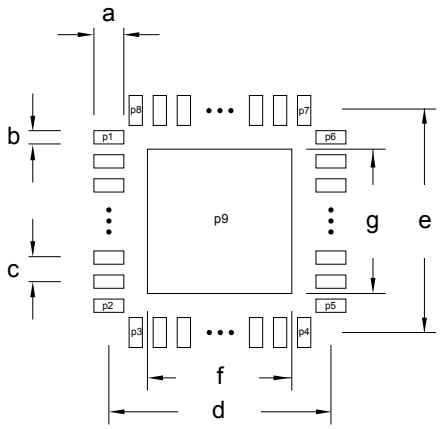

Figure 10.2. QFN64 PCB Land Pattern

Table 10.2. QFN64 PCB Land Pattern Dimensions (Dimensions in mm)

Symbol	Dim. (mm)	Symbol	Pin Number	Symbol	Pin Number
a	0.85	P1	1	P8	64
b	0.30	P2	16	P9	65
c	0.50	P3	17		
d	8.90	P4	32		
e	8.90	P5	33		
f	7.20	P6	48		
g	7.20	P7	49		

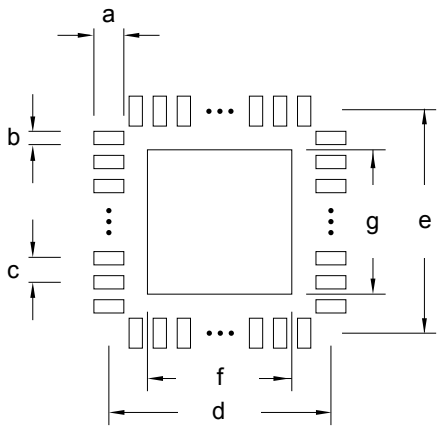

Figure 10.3. QFN64 PCB Solder Mask

Table 10.3. QFN64 PCB Solder Mask Dimensions (Dimensions in mm)

Symbol	Dim. (mm)	Symbol	Dim. (mm)
a	0.97	e	8.90
b	0.42	f	7.32
c	0.50	g	7.32

13.9 Revision 1.40

February 27th, 2012

Updated Power Management section.

Corrected operating voltage from 1.8 V to 1.85 V.

Corrected $TGRAD_{ADCTH}$ parameter.

Corrected package drawing.

Updated PCB land pattern, solder mask and stencil design.

For LQFP48 devices, corrected available Pulse Counters from 3 to 2.

For LQFP48 devices, corrected available LEUARTs from 2 to 1.

For LQFP64 devices, corrected ordering codes in the ordering information table.

13.10 Revision 1.30

May 20th, 2011

This revision applies the following devices:

- EFM32G200
- EFM32G210
- EFM32G230
- EFM32G280
- EFM32G290
- EFM32G840
- EFM32G880
- EFM32G890

Updated LFXO load capacitance section.