STMicroelectronics - STM32F777VIH6 Datasheet

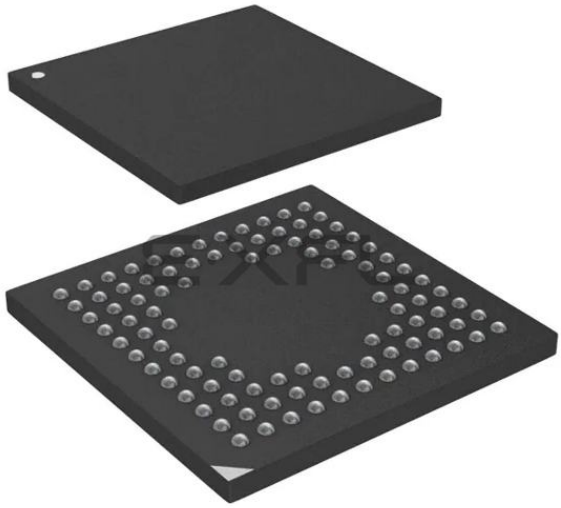

Welcome to E-XFL.COM

What is "Embedded - Microcontrollers"?

"Embedded - Microcontrollers" refer to small, integrated circuits designed to perform specific tasks within larger systems. These microcontrollers are essentially compact computers on a single chip, containing a processor core, memory, and programmable input/output peripherals. They are called "embedded" because they are embedded within electronic devices to control various functions, rather than serving as standalone computers. Microcontrollers are crucial in modern electronics, providing the intelligence and control needed for a wide range of applications.

Applications of "Embedded - Microcontrollers"

Details	
Product Status	Active
Core Processor	ARM® Cortex®-M7
Core Size	32-Bit Single-Core
Speed	216MHz
Connectivity	CANbus, EBI/EMI, Ethernet, I²C, IrDA, LINbus, MMC/SD/SDIO, QSPI, SAI, SPDIF, SPI, UART/USART, USB OTG
Peripherals	Brown-out Detect/Reset, DMA, I²S, LCD, POR, PWM, WDT
Number of I/O	82
Program Memory Size	2MB (2M x 8)
Program Memory Type	FLASH
EEPROM Size	-
RAM Size	512K x 8
Voltage - Supply (Vcc/Vdd)	1.7V ~ 3.6V
Data Converters	A/D 16x12b; D/A 2x12b
Oscillator Type	Internal
Operating Temperature	-40°C ~ 85°C (TA)
Mounting Type	Surface Mount
Package / Case	100-TFBGA
Supplier Device Package	100-TFBGA (8x8)
Purchase URL	https://www.e-xfl.com/product-detail/stmicroelectronics/stm32f777vih6

Figure 92. LQFP208, 28 x 28 mm, 208-pin low-profile quad flat package outline 237
Figure 93. LQFP208, 28 x 28 mm, 208-pin low-profile quad flat package recommended footprint 239
Figure 94. LQFP208, 28 x 28 mm, 208-pin low-profile quad flat package top view example 240
Figure 95. WLCSP 180-bump, 5.5 x 6 mm, 0.4 mm pitch wafer level chip scale package outline 241
Figure 96. WLCSP 180-bump, 5.5 x 6 mm, 0.4 mm pitch wafer level chip scale package recommended footprint 243
Figure 97. WLCSP180-bump, 5.5 x 6 mm, 0.4 mm pitch wafer level chip scale package top view example 244
Figure 98. UFBGA176+25, 10 × 10 × 0.65 mm ultra thin fine-pitch ball grid array package outline 245
Figure 99. UFBGA176+25, 10 x 10 mm x 0.65 mm, ultra fine-pitch ball grid array package recommended footprint 246
Figure 100. UFBGA 176+25, 10 × 10 × 0.65 mm ultra thin fine-pitch ball grid array package top view example 247
Figure 101. TFBGA216, 13 × 13 × 0.8 mm thin fine-pitch ball grid array package outline 248
Figure 102. TFBGA216, 13 x 13 mm, 0.8 mm pitch, thin fine-pitch ball grid array package recommended footprint 249
Figure 103. TFBGA216, 13 × 13 × 0.8 mm thin fine-pitch ball grid array package top view example 250

2.3 Embedded Flash memory

The STM32F777xx, STM32F778Ax and STM32F779xx devices embed a Flash memory of up to 2 Mbytes available for storing programs and data. The Flash interface features:

- Single /or Dual bank operating modes,
- Read-While-Write (RWW) in Dual bank mode.

2.4 CRC (cyclic redundancy check) calculation unit

The CRC (cyclic redundancy check) calculation unit is used to get a CRC code using a configurable generator polynomial value and size.

Among other applications, CRC-based techniques are used to verify data transmission or storage integrity. In the scope of the EN/IEC 60335-1 standard, they offer a means of verifying the Flash memory integrity. The CRC calculation unit helps compute a signature of the software during runtime, to be compared with a reference signature generated at link-time and stored at a given memory location.

2.5 Embedded SRAM

All the devices feature:

- System SRAM up to 512 Kbytes:
  - SRAM1 on AHB bus Matrix: 368 Kbytes
  - SRAM2 on AHB bus Matrix: 16 Kbytes
  - DTCM-RAM on TCM interface (Tighly Coupled Memory interface): 128 Kbytes for critical real-time data.
- Instruction RAM (ITCM-RAM) 16 Kbytes:
  - It is mapped on TCM interface and reserved only for CPU Execution/Instruction useful for critical real-time routines.

The Data TCM RAM is accessible by the GP-DMAs and peripherals DMAs through specific AHB slave of the CPU.The instruction TCM RAM is reserved only for CPU. It is accessed at CPU clock speed with 0 wait states.

- 4 Kbytes of backup SRAM

  This area is accessible only from the CPU. Its content is protected against possible unwanted write accesses, and is retained in Standby or V_{BAT} mode.

2.6 AXI-AHB bus matrix

The STM32F777xx, STM32F778Ax and STM32F779xx system architecture is based on 2 sub-systems:

- An AXI to multi AHB bridge converting AXI4 protocol to AHB-Lite protocol:
  - 3x AXI to 32-bit AHB bridges connected to AHB bus matrix
  - 1x AXI to 64-bit AHB bridge connected to the embedded Flash memory
- A multi-AHB Bus-Matrix
  - The 32-bit multi-AHB bus matrix interconnects all the masters (CPU, DMAs, Ethernet, USB HS, LCD-TFT, and DMA2D) and the slaves (Flash memory, RAM,

Figure 7. PDR_ON control with internal reset OFF

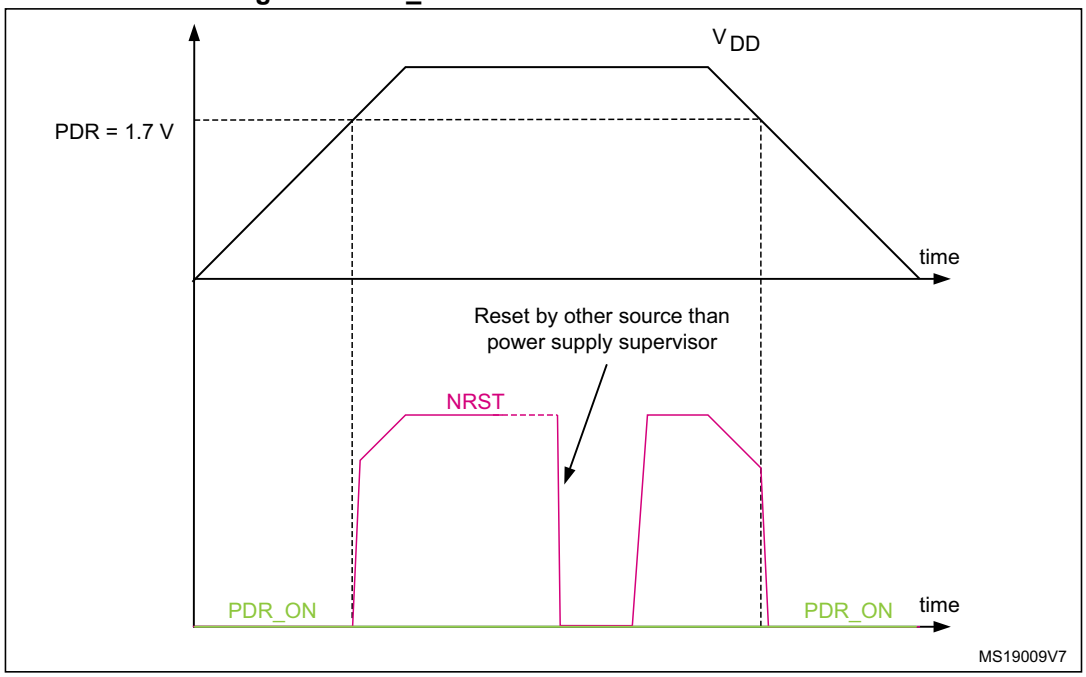

2.19 Voltage regulator

The regulator has four operating modes:

- Regulator ON
  - Main regulator mode (MR)
  - Low power regulator (LPR)
  - Power-down
- Regulator OFF

2.19.1 Regulator ON

On packages embedding the BYPASS_REG pin, the regulator is enabled by holding BYPASS_REG low. On all other packages, the regulator is always enabled.

There are three power modes configured by software when the regulator is ON:

- MR mode used in Run/sleep modes or in Stop modes
  - In Run/Sleep modes

    The MR mode is used either in the normal mode (default mode) or the over-drive mode (enabled by software). Different voltages scaling are provided to reach the best compromise between maximum frequency and dynamic power consumption. The over-drive mode allows operating at a higher frequency than the normal mode for a given voltage scaling.
  - In Stop modes

    The MR can be configured in two ways during stop mode:

    MR operates in normal mode (default mode of MR in stop mode)

    MR operates in under-drive mode (reduced leakage mode).

Table 10. STM32F777xx, STM32F778Ax and STM32F779xx pin and ball definitions (continued)

Pin Number										Pin name (function after reset	Pin type	I/O structure	Notes	Alternate functions	Additional functions
STM32F777xx						STM32F778Ax STM32F779xx									
LQFP100	LQFP144	UFBGA176	LQFP176	LQFP208	TFBGA216	WLCSP180(1)	LQFP176	LQFP208	TFBGA216						
-	-	D3	11	11	E4	G10	11	11	E4	PI9	I/O	FT	-	UART4_RX, CAN1_RX, FMC_D30, LCD_VSYNC, EVENTOUT	-
-	-	E3	12	12	D5	H10	12	12	D5	PI10	I/O	FT	-	ETH_MII_RX_ER, FMC_D31, LCD_HSYNC, EVENTOUT	-
-	-	E4	13	13	F3	F11	13	13	F3	PI11	I/O	FT	-	LCD_G6, OTG_HS_ULPI_DIR, EVENTOUT	WKUP6
-	-	F2	14	14	F2	F13	14	14	F2	VSS	S	-	-	-	-
-	-	F3	15	15	F4	F12	15	15	F4	VDD	S	-	-	-	-
-	10	E2	16	16	D2	G11	16	16	D2	PF0	I/O	FT	-	I2C2_SDA, FMC_A0, EVENTOUT	-
-	11	H3	17	17	E2	G12	17	17	E2	PF1	I/O	FT	-	I2C2_SCL, FMC_A1, EVENTOUT	-
-	12	H2	18	18	G2	G13	18	18	G2	PF2	I/O	FT	-	I2C2_SMBA, FMC_A2, EVENTOUT	-
-	-	-	-	19	E3	NC	-	19	E3	PI12	I/O	FT	-	LCD_HSYNC, EVENTOUT	-
-	-	-	-	20	G3	NC	-	20	G3	PI13	I/O	FT	-	LCD_VSYNC, EVENTOUT	-
-	-	-	-	21	H3	NC	-	21	H3	PI14	I/O	FT	-	LCD_CLK, EVENTOUT	-
-	13	J2	19	22	H2	H11	19	22	H2	PF3	I/O	FT	-	FMC_A3, EVENTOUT	ADC3_IN9
-	14	J3	20	23	J2	H12	20	23	J2	PF4	I/O	FT	-	FMC_A4, EVENTOUT	ADC3_IN14
-	15	K3	21	24	K3	H13	21	24	K3	PF5	I/O	FT	-	FMC_A5, EVENTOUT	ADC3_IN15
10	16	G2	22	25	H6	J13	22	25	H6	VSS	S	-	-	-	-
11	17	G3	23	26	H5	J12	23	26	H5	VDD	S	-	-	-	-
-	18	K2	24	27	K2	NC	24	27	K2	PF6	I/O	FT	-	TIM10_CH1, SPI5_NSS, SAI1_SD_B, UART7_RX, QUADSPI_BK1_IO3, EVENTOUT	ADC3_IN4

Table 10. STM32F777xx, STM32F778Ax and STM32F779xx pin and ball definitions (continued)

Pin Number										Pin name (function after reset	Pin type	I/O structure	Notes	Alternate functions	Additional functions
STM32F777xx						STM32F778Ax STM32F779xx									
LQFP100	LQFP144	UFBGA176	LQFP176	LQFP208	TFBGA216	WLCSP180(1)	LQFP176	LQFP208	TFBGA216						
71	104	B15	123	146	B15	D1	127	146	B15	PA12	I/O	FT	-	TIM1_ETR, SPI2_SCK/I2S2_CK, UART4_TX, USART1_RTS, SAI2_FS_B, CAN1_TX, OTG_FS_DP, LCD_R5, EVENTOUT	-
72	105	A15	124	147	A15	D2	128	147	A15	PA13(JTMS-SWDIO)	I/O	FT	-	JTMS-SWDIO, EVENTOUT	-
73	106	F13	125	148	E11	C1	129	148	E11	VCAP_2	S	-	-	-	-
74	107	F12	126	149	F10	C2	130	149	F10	VSS	S	-	-	-	-
75	108	G13	127	150	F11	B2	131	150	F11	VDD	S	-	-	-	-
-	-	E12	128	151	E12	F6	-	151	E12	PH13	I/O	FT	-	TIM8_CH1N, UART4_TX, CAN1_TX, FMC_D21, LCD_G2, EVENTOUT	-
-	-	E13	129	152	E13	F7	-	152	E13	PH14	I/O	FT	-	TIM8_CH2N, UART4_RX, CAN1_RX, FMC_D22, DCMI_D4, LCD_G3, EVENTOUT	-
-	-	D13	130	153	D13	E5	-	153	D13	PH15	I/O	FT	-	TIM8_CH3N, FMC_D23, DCMI_D11, LCD_G4, EVENTOUT	-
-	-	E14	131	154	E14	E4	132	154	E14	PI0	I/O	FT	-	TIM5_CH4, SPI2_NSS/I2S2_WS, FMC_D24, DCMI_D13, LCD_G5, EVENTOUT	-
-	-	D14	132	155	D14	B3	133	155	D14	PI1	I/O	FT	-	TIM8_BKIN2, SPI2_SCK/I2S2_CK, FMC_D25, DCMI_D8, LCD_G6, EVENTOUT	-
-	-	C14	133	156	C14	C3	-	156	C14	PI2	I/O	FT	-	TIM8_CH4, SPI2_MISO, FMC_D26, DCMI_D9, LCD_G7, EVENTOUT	-

Table 12. STM32F777xx, STM32F778Ax and STM32F779xx alternate function mapping (continued)

Port		AF0	AF1	AF2	AF3	AF4	AF5	AF6	AF7	AF8	AF9	AF10	AF11	AF12	AF13	AF14	AF15
		SYS	I2C4/UART5/TIM1/2	TIM3/4/5	TIM8/9/10/11/LPTIM1/DFSDM1/CEC	I2C1/2/3/4/USART1/CEC	SPI1/I2S1/SPI2/I2S2/SPI3/I2S3/SPI4/5/6	SPI2/I2S2/SPI3/I2S3/SAI1/I2C4/UART4/DFSDM1	SPI2/I2S2/SPI3/I2S3/SPI6/USART1/2/3/UART5/DFSDM1/SPDIF	SPI6/SAI2/USART6/UART4/5/7/8/OTG_FS/SPDIF	CAN1/2/TIM12/13/14/QUADSPI/FMC/LCD	SAI2/QUADSPI/SDMMC2/DFSDM1/OTG2_HS/OTG1_FS/LCD	I2C4/CAN3/SDMMC2/ETH	UART7/FMC/SDMMC1/MDIOS/OTG2_FS	DCMI/LCD/DSI	LCD	SYS
Port C	PC11	-	-	-	DFSDM1_DATAIN5	-	-	SPI3_MISO	USART3_RX	UART4_RX	QUADSPI_BK2_NCS	-	-	SDMMC_D3	DCMI_D4	-	EVENTOUT
	PC12	TRACED3	-	-	-	-	-	SPI3_MOSI/I2S3_SD	USART3_CK	UART5_TX	-	-	-	SDMMC_CK	DCMI_D9	-	EVENTOUT
	PC13	-	-	-	-	-	-	-	-	-	-	-	-	-	-	-	EVENTOUT
	PC14	-	-	-	-	-	-	-	-	-	-	-	-	-	-	-	EVENTOUT
	PC15	-	-	-	-	-	-	-	-	-	-	-	-	-	-	-	EVENTOUT
Port D	PD0	-	-	-	DFSDM1_CKIN6	-	-	DFSDM1_DATAIN7	-	UART4_RX	CAN1_RX	-	-	FMC_D2	-	-	EVENTOUT
	PD1	-	-	-	DFSDM1_DATAIN6	-	-	DFSDM1_CKIN7	-	UART4_TX	CAN1_TX	-	-	FMC_D3	-	-	EVENTOUT
	PD2	TRACED2	-	TIM3_ETR	-	-	-	-	-	UART5_RX	-	-	-	SDMMC_CMD	DCMI_D11	-	EVENTOUT
	PD3	-	-	-	DFSDM1_CKOUT	-	SPI2_SCK/I2S2_CK	DFSDM1_DATAIN0	USART2_CTS	-	-	-	-	FMC_CLK	DCMI_D5	LCD_G7	EVENTOUT
	PD4	-	-	-	-	-	-	DFSDM1_CKIN0	USART2_RTS	-	-	-	-	FMC_NOE	-	-	EVENTOUT
	PD5	-	-	-	-	-	-	-	USART2_TX	-	-	-	-	FMC_NWE	-	-	EVENTOUT
	PD6	-	-	-	DFSDM1_CKIN4	-	SPI3_MOSI/I2S3_SD	SAI1_SD_A	USART2_RX	-	-	DFSDM1_DATAIN1	SDMMC2_CK	FMC_NWAIT	DCMI_D10	LCD_B2	EVENTOUT
	PD7	-	-	-	DFSDM1_DATAIN4	-	SPI1_MOSI/I2S1_SD	DFSDM1_CKIN1	USART2_CK	SPDIF_RX0	-	-	SDMMC2_CMD	FMC_NE1	-	-	EVENTOUT

Table 13. STM32F777xx, STM32F778Ax and STM32F779xx register boundary addresses(1) (continued)

Bus	Boundary address	Peripheral
	0x4000 8000- 0x4000 FFFF	Reserved
APB1	0x4000 7C00 - 0x4000 7FFF	UART8
	0x4000 7800 - 0x4000 7BFF	UART7
	0x4000 7400 - 0x4000 77FF	DAC
	0x4000 7000 - 0x4000 73FF	PWR
	0x4000 6C00 - 0x4000 6FFF	HDMI-CEC
	0x4000 6800 - 0x4000 6BFF	CAN2
	0x4000 6400 - 0x4000 67FF	CAN1
	0x4000 6000 - 0x4000 63FF	I2C4
	0x4000 5C00 - 0x4000 5FFF	I2C3
	0x4000 5800 - 0x4000 5BFF	I2C2
	0x4000 5400 - 0x4000 57FF	I2C1
	0x4000 5000 - 0x4000 53FF	UART5
	0x4000 4C00 - 0x4000 4FFF	UART4
	0x4000 4800 - 0x4000 4BFF	USART3
	0x4000 4400 - 0x4000 47FF	USART2
	0x4000 4000 - 0x4000 43FF	SPDIFRX
	0x4000 3C00 - 0x4000 3FFF	SPI3 / I2S3
	0x4000 3800 - 0x4000 3BFF	SPI2 / I2S2
	0x4000 3400 - 0x4000 37FF	CAN3
	0x4000 3000 - 0x4000 33FF	IWDG
	0x4000 2C00 - 0x4000 2FFF	WWDG
	0x4000 2800 - 0x4000 2BFF	RTC & BKP Registers
	0x4000 2400 - 0x4000 27FF	LPTIM1
	0x4000 2000 - 0x4000 23FF	TIM14
	0x4000 1C00 - 0x4000 1FFF	TIM13
	0x4000 1800 - 0x4000 1BFF	TIM12
	0x4000 1400 - 0x4000 17FF	TIM7
	0x4000 1000 - 0x4000 13FF	TIM6
	0x4000 0C00 - 0x4000 0FFF	TIM5
	0x4000 0800 - 0x4000 0BFF	TIM4
	0x4000 0400 - 0x4000 07FF	TIM3
	0x4000 0000 - 0x4000 03FF	TIM2

1. The gray color is used for reserved Flash memory addresses.

Figure 25. STM32F767xx/STM32F777xx power supply scheme

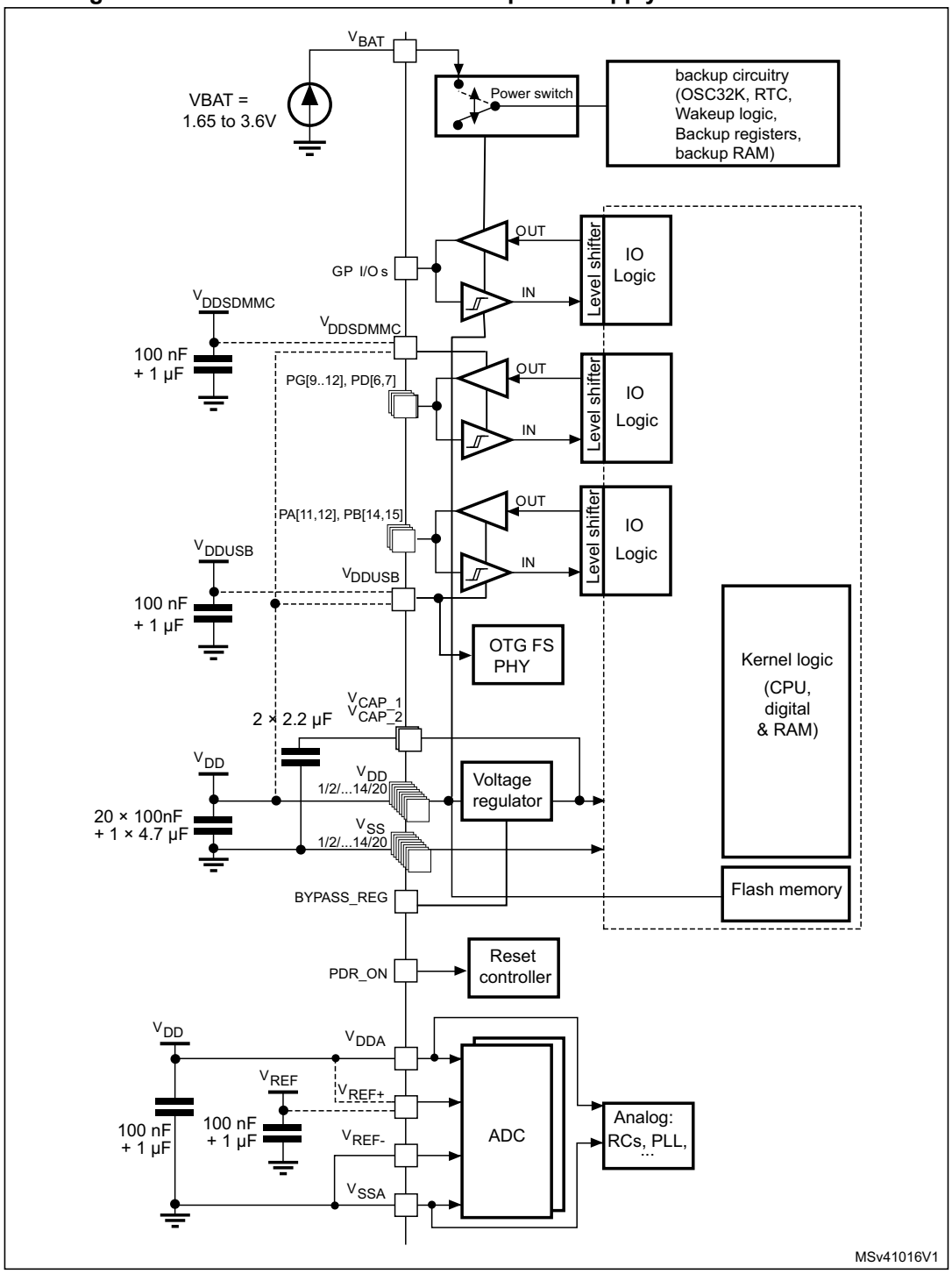

1. To connect BYPASS_REG and PDR_ON pins, refer to *Section 2.18: Power supply supervisor* and *Section 2.19: Voltage regulator*.
2. The two 2.2 µF ceramic capacitors should be replaced by two 100 nF decoupling capacitors when the voltage regulator is OFF.
3. The 4.7 µF ceramic capacitor must be connected to one of the V_{DD} pin.
4. V_{DDA}=V_{DD} and V_{SSA}=V_{SS}.

5.3 Operating conditions

5.3.1 General operating conditions

Table 17. General operating conditions

Symbol	Parameter	Conditions[1]		Min	Typ	Max	Unit
f_{HCLK}	Internal AHB clock frequency	Power Scale 3 (VOS[1:0] bits in PWR_CR register = 0x01), Regulator ON, over-drive OFF		0	-	144	MHz
		Power Scale 2 (VOS[1:0] bits in PWR_CR register = 0x10), Regulator ON	Over-drive OFF	0	-	168	
			Over-drive ON		-	180	
		Power Scale 1 (VOS[1:0] bits in PWR_CR register= 0x11), Regulator ON	Over-drive OFF	0	-	180	
			Over-drive ON		-	216[2]	
f_{PCLK1}	Internal APB1 clock frequency	Over-drive OFF		0	-	45	
		Over-drive ON		0	-	54	
f_{PCLK2}	Internal APB2 clock frequency	Over-drive OFF		0	-	90	
		Over-drive ON		0	-	108	
V_{DD}	Standard operating voltage	-		1.7[3]	-	3.6	V
V_{DDA}[4][5]	Analog operating voltage (ADC limited to 1.2 M samples)	Must be the same potential as V_{DD}[6]		1.7[3]	-	2.4	
	Analog operating voltage (ADC limited to 2.4 M samples)			2.4	-	3.6	
V_{DDUSB}	USB supply voltage (supply voltage for PA11,PA12, PB14 and PB15 pins)	USB not used		1.7	3.3	3.6	
		USB used		3.0	-	3.6	
V_{BAT}	Backup operating voltage	-		1.65	-	3.6	
$V_{DDSDMMC}$	SDMMC2 supply voltage (supply voltage for PG[12:9] and PD6 pins)	It can be different from VDD		1.7	-	3.6	
V_{DDDSI}	DSI system operating	-		1.7	-	3.6	

2. When analog peripheral blocks such as ADCs, DACs, HSE, LSE, HSI, or LSI are ON, an additional power consumption should be considered.
3. When the ADC is ON (ADON bit set in the ADC_CR2 register), add an additional power consumption of 1.73 mA per ADC for the analog part.
4. Guaranteed by test in production.

Table 25. Typical and maximum current consumption in Run mode, code with data processing running from Flash memory (Single bank mode, ART ON except prefetch / L1-cache ON) or SRAM on AXI (L1-cache ON), regulator ON

Symbol	Parameter	Conditions	f_{HCLK} (MHz)	Typ	Max(1)			Unit
					T_A = 25 °C	T_A = 85 °C	T_A = 105 °C	
I_{DD}	Supply current in RUN mode	All peripherals enabled(2)(3)	216	190	219	255	-	mA
			200	177	205	241	268	
			180	157	173	208	228	
			168	139	153	185	204	
			144	107	117	144	161	
			60	48	54	81	98	
			25	23	28	54	71	
		All peripherals disabled(3)	216	92	104	150	-	
			200	86	97	143	170	
			180	76	85	119	140	
			168	67	75	107	126	
			144	52	58	84	101	
			60	23	28	54	71	
			25	11	15	42	56	

1. Guaranteed by characterization results.
2. When analog peripheral blocks such as ADCs, DACs, HSE, LSE, HSI, or LSI are ON, an additional power consumption should be considered.
3. When the ADC is ON (ADON bit set in the ADC_CR2 register), add an additional power consumption of 1.73 mA per ADC for the analog part.

Figure 38. FT I/O input characteristics

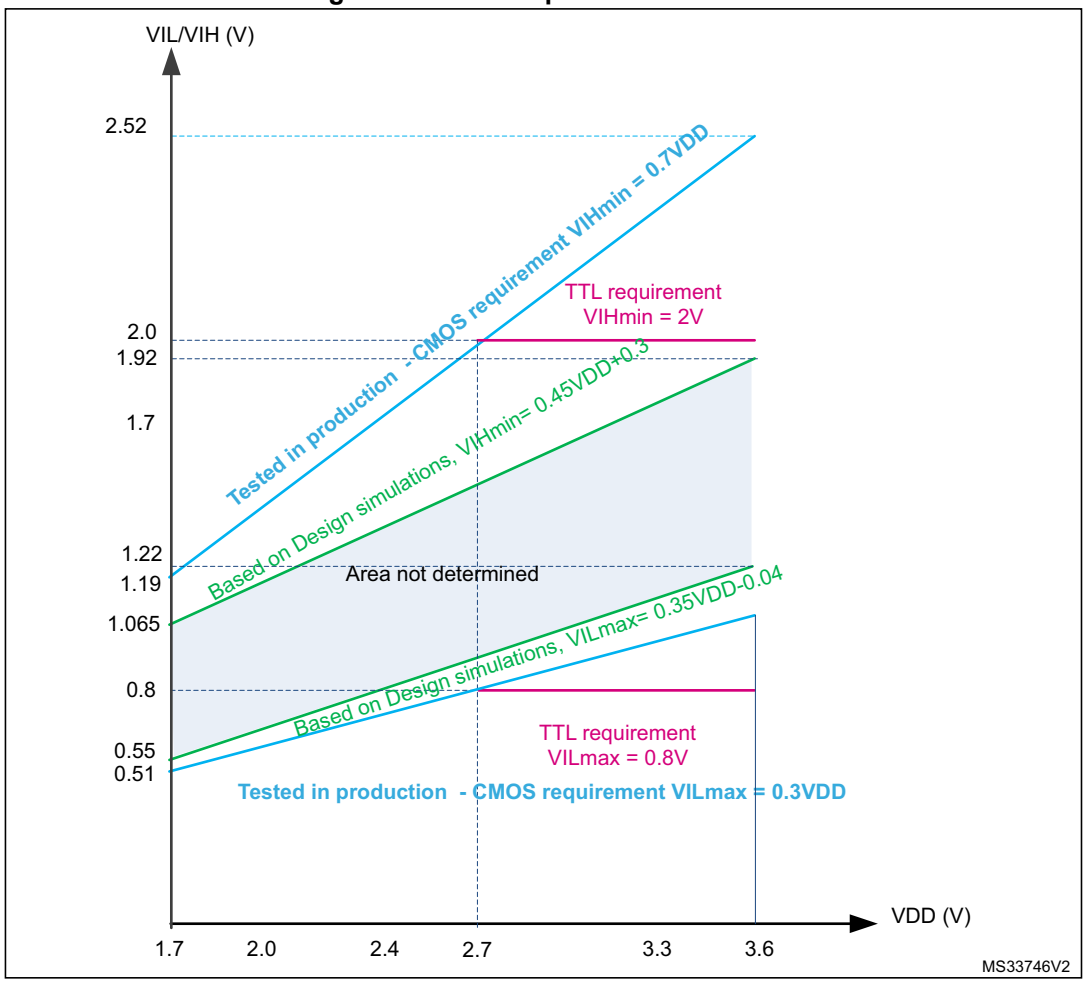

Output driving current

The GPIOs (general purpose input/outputs) can sink or source up to ±8 mA, and sink or source up to ±20 mA (with a relaxed V_{OL}/V_{OH}) except PC13, PC14, PC15 and PI8 which can sink or source up to ±3mA. When using the PC13 to PC15 and PI8 GPIOs in output mode, the speed should not exceed 2 MHz with a maximum load of 30 pF.

In the user application, the number of I/O pins which can drive current must be limited to respect the absolute maximum rating specified in *Section 5.2*. In particular:

- The sum of the currents sourced by all the I/Os on $V_{DD,}$ plus the maximum Run consumption of the MCU sourced on $V_{DD,}$ cannot exceed the absolute maximum rating ΣI_{VDD} (see *Table 15*).
- The sum of the currents sunk by all the I/Os on V_{SS} plus the maximum Run consumption of the MCU sunk on V_{SS} cannot exceed the absolute maximum rating ΣI_{VSS} (see *Table 15*).

Output voltage levels

Unless otherwise specified, the parameters given in *Table 66* are derived from tests performed under ambient temperature and V_{DD} supply voltage conditions summarized in *Table 17*. All I/Os are CMOS and TTL compliant.

5.3.22 TIM timer characteristics

The parameters given in *Table 69* are guaranteed by design.

Refer to *Section 5.3.20: I/O port characteristics* for details on the input/output alternate function characteristics (output compare, input capture, external clock, PWM output).

Table 69. TIMx characteristics(1)(2)

Symbol	Parameter	Conditions(3)	Min	Max	Unit
$t_{res(TIM)}$	Timer resolution time	AHB/APBx prescaler=1 or 2 or 4, $f_{TIMxCLK}$ = 216 MHz	1	-	$t_{TIMxCLK}$
		AHB/APBx prescaler>4, $f_{TIMxCLK}$ = 100 MHz	1	-	$t_{TIMxCLK}$
f_{EXT}	Timer external clock frequency on CH1 to CH4	$f_{TIMxCLK}$ = 216 MHz	0	$f_{TIMxCLK}/2$	MHz
Res_{TIM}	Timer resolution		-	16/32	bit
t_{MAX_COUNT}	Maximum possible count with 32-bit counter	-	-	65536 × 65536	$t_{TIMxCLK}$

1. TIMx is used as a general term to refer to the TIM1 to TIM12 timers.
2. Guaranteed by design.
3. The maximum timer frequency on APB1 or APB2 is up to 216 MHz, by setting the TIMPRE bit in the RCC_DCKCFGR register, if APBx prescaler is 1 or 2 or 4, then TIMxCLK = HCLK, otherwise TIMxCLK = 4x PCLKx.

5.3.23 RTC characteristics

Table 70. RTC characteristics

Symbol	Parameter	Conditions	Min	Max
-	f_{PCLK1}/RTCCLK frequency ratio	Any read/write operation from/to an RTC register	4	-

5.3.24 12-bit ADC characteristics

Unless otherwise specified, the parameters given in *Table 71* are derived from tests performed under the ambient temperature, f_{PCLK2} frequency and V_{DDA} supply voltage conditions summarized in *Table 17*.

Table 71. ADC characteristics

Symbol	Parameter	Conditions	Min	Typ	Max	Unit
V_{DDA}	Power supply	$V_{DDA} - V_{REF+} < 1.2$ V	1.7(1)	-	3.6	V
V_{REF+}	Positive reference voltage		1.7(1)	-	V_{DDA}	V
f_{ADC}	ADC clock frequency	V_{DDA} = 1.7(1) to 2.4 V	0.6	15	18	MHz
		V_{DDA} = 2.4 to 3.6 V	0.6	30	36	MHz

Table 80. internal reference voltage (continued)

Symbol	Parameter	Conditions	Min	Typ	Max	Unit
T_{Coeff}(2)	Temperature coefficient	-	-	30	50	ppm/°C
t_{START}(2)	Startup time	-	-	6	10	µs

1. Shortest sampling time can be determined in the application by multiple iterations.
2. Guaranteed by design.

Table 81. Internal reference voltage calibration values

Symbol	Parameter	Memory address
V_{REFIN_CAL}	Raw data acquired at temperature of 30 °C $_{VDDA}$ = 3.3 V	0x1FF0 F44A - 0x1FF0 F44B

5.3.28 DAC electrical characteristics

Table 82. DAC characteristics

Symbol	Parameter	Min	Typ	Max	Unit	Comments
V_{DDA}	Analog supply voltage	1.7(1)	-	3.6	V	-
V_{REF+}	Reference supply voltage	1.7(1)	-	3.6	V	$V_{REF+} \leq V_{DDA}$
V_{SSA}	Ground	0	-	0	V	-
R_{LOAD}(2)	Resistive load with buffer ON	5	-	-	kΩ	-
R_O(2)	Impedance output with buffer OFF	-	-	15	kΩ	When the buffer is OFF, the Minimum resistive load between DAC_OUT and V_{SS} to have a 1% accuracy is 1.5 MΩ
C_{LOAD}(2)	Capacitive load	-	-	50	pF	Maximum capacitive load at DAC_OUT pin (when the buffer is ON).
DAC_OUT min(2)	Lower DAC_OUT voltage with buffer ON	0.2	-	-	V	It gives the maximum output excursion of the DAC. It corresponds to 12-bit input code (0x0E0) to (0xF1C) at V_{REF+} = 3.6 V and (0x1C7) to (0xE38) at V_{REF+} = 1.7 V
DAC_OUT max(2)	Higher DAC_OUT voltage with buffer ON	-	-	V_{DDA} – 0.2	V	
DAC_OUT min(2)	Lower DAC_OUT voltage with buffer OFF	-	0.5	-	mV	It gives the maximum output excursion of the DAC.
DAC_OUT max(2)	Higher DAC_OUT voltage with buffer OFF	-	-	V_{REF+} – 1LSB	V	
I_{VREF+}(4)	DAC DC V_{REF} current consumption in quiescent mode (Standby mode)	-	170	240	µA	With no load, worst code (0x800) at V_{REF+} = 3.6 V in terms of DC consumption on the inputs
		-	50	75		With no load, worst code (0xF1C) at V_{REF+} = 3.6 V in terms of DC consumption on the inputs

I²S interface characteristics

Unless otherwise specified, the parameters given in *Table 86* for the I²S interface are derived from tests performed under the ambient temperature, f_{PCLKx} frequency and V_{DD} supply voltage conditions summarized in *Table 17*, with the following configuration:

- Output speed is set to OSPEEDRy[1:0] = 10
- Capacitive load C = 30 pF
- Measurement points are done at CMOS levels: $0.5V_{DD}$

Refer to *Section 5.3.20: I/O port characteristics* for more details on the input/output alternate function characteristics (CK, SD, WS).

Table 86. I²S dynamic characteristics(1)

Symbol	Parameter	Conditions	Min	Max	Unit
f_{MCK}	I2S Main clock output	-	256x8K	256xFs(2)	MHz
f_{CK}	I2S clock frequency	Master data	-	64xFs	MHz
		Slave data	-	64xFs	
D_{CK}	I2S clock frequency duty cycle	Slave receiver	30	70	%
$t_{v(WS)}$	WS valid time	Master mode	-	3	ns
$t_{h(WS)}$	WS hold time	Master mode	0	-	
$t_{su(WS)}$	WS setup time	Slave mode	5	-	
$t_{h(WS)}$	WS hold time	Slave mode	2	-	
$t_{su(SD_MR)}$	Data input setup time	Master receiver	2.5	-	
$t_{su(SD_SR)}$		Slave receiver	2.5	-	
$t_{h(SD_MR)}$	Data input hold time	Master receiver	3.5	-	
$t_{h(SD_SR)}$		Slave receiver	2	-	
$t_{v(SD_ST)}$	Data output valid time	Slave transmitter (after enable edge)	-	12	
$t_{v(SD_MT)}$		Master transmitter (after enable edge)	-	3	
$t_{h(SD_ST)}$	Data output hold time	Slave transmitter (after enable edge)	5	-	
$t_{h(SD_MT)}$		Master transmitter (after enable edge)	0	-	

1. Guaranteed by characterization results.
2. The maximum value of 256xFs is 49.152 MHz (APB1 maximum frequency).

*Note: Refer to RM0410 reference manual I2S section for more details about the sampling frequency (F_S). f_{MCK}, f_{CK}, and D_{CK} values reflect only the digital peripheral behavior. The values of these parameters might be slightly impacted by the source clock precision. D_{CK} depends mainly on the value of ODD bit. The digital contribution leads to a minimum value of (I2SDIV/(2*I2SDIV+ODD) and a maximum value of (I2SDIV+ODD)/(2*I2SDIV+ODD). F_S maximum value is supported for each mode/condition.*

Table 88. Dynamics characteristics: SWD characteristics

Symbol	Parameter	Conditions	Min	Typ	Max	Unit
F_{pp}	SWCLK clock frequency	2.7V <VDD< 3.6V	-	-	80	MHz
$1/t_{c(SWCLK)}$		1.71 <VDD< 3.6V	-	-	50	
$t_{w(SWCLKH)}$	SCK high and low time	-	$T_{PCLK} - 1$	T_{PCLK}	$T_{PCLK} + 1$	ns
$t_{w(SWCLKL)}$						
$t_{su(SWDIO)}$	SWDIO input setup time	-	3.5	-	-	
$t_{h(SWDIO)}$	SWDIO input hold time	-	0	-	-	
$t_{ov\ (SWDIO)}$	SWDIO output valid time	2.7V <VDD< 3.6V	-	11	12	
		1.71 <VDD< 3.6V	-	11	16.5	
$t_{oh(SWDIO)}$	SWDIO output hold time	-	9	-	-	

JTAG/SWD timing diagrams

Figure 51. JTAG timing diagram

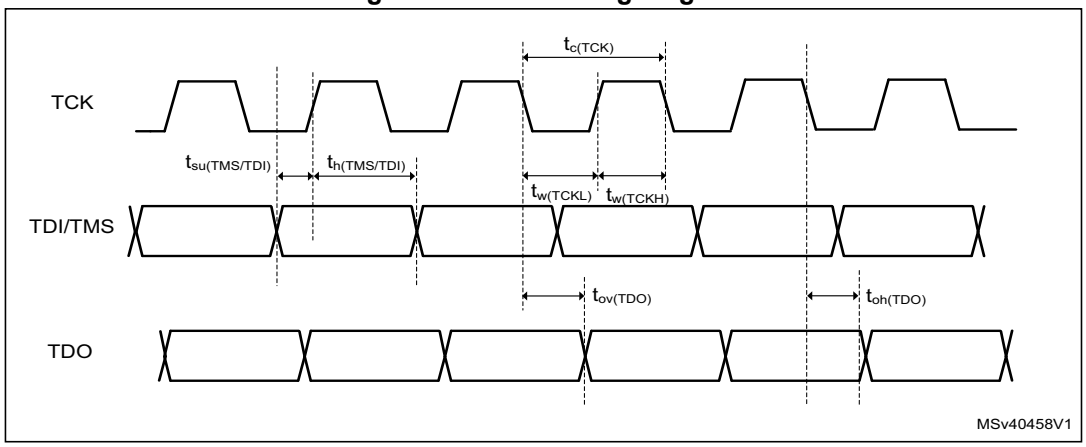

1. Guaranteed by characterization results.

Table 99. MDIO Slave timing parameters

Symbol	Parameter	Min	Typ	Max	Unit
F_{sDC}	Management Data clock	-	-	40	MHz
$t_{d(MDIO)}$	Management Data input/output **output valid time**	7	8	20	ns
$t_{su(MDIO)}$	Management Data input/output **setup time**	4	-	-	
$t_{h(MDIO)}$	Management Data input/output **hold time**	1	-	-	

The MDIO controller is mapped on APB2 domain. The frequency of the APB bus should at least 1.5 times the MDC frequency: $F_{PCLK2} \geq 1.5 * F_{MDC}$

Figure 60. MDIO Slave timing diagram

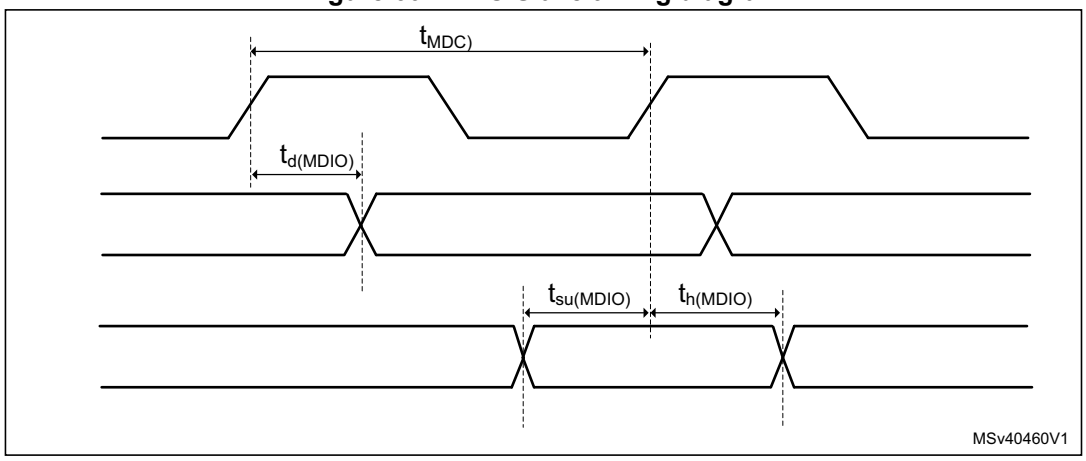

CAN (controller area network) interface

Refer to *Section 5.3.20: I/O port characteristics* for more details on the input/output alternate function characteristics (CANx_TX and CANx_RX).

5.3.30 FMC characteristics

Unless otherwise specified, the parameters given in *Table 100* to *Table 113* for the FMC interface are derived from tests performed under the ambient temperature, f_{HCLK} frequency and V_{DD} supply voltage conditions summarized in *Table 17*, with the following configuration:

- Output speed is set to OSPEEDRy[1:0] = 11
- Measurement points are done at CMOS levels: $0.5V_{DD}$

Table 123. Dynamic characteristics: SD / MMC characteristics, V_{DD}=2.7V to 3.6V(1)

Symbol	Parameter	Conditions	Min	Typ	Max	Unit
f_{PP}	Clock frequency in data transfer mode	-	0	-	50	MHz
-	SDMMC_CK/fPCLK2 frequency ratio	-	-	-	8/3	-
$t_{W(CKL)}$	Clock low time	fpp =50 MHz	9.5	10.5	-	ns
$t_{W(CKH)}$	Clock high time	fpp =50 MHz	8.5	9.5	-	
CMD, D inputs (referenced to CK) in MMC and SD HS mode						
t_{ISU}	Input setup time HS	fpp =50 MHz	3.5	-	-	ns
t_{IH}	Input hold time HS	fpp =50 MHz	2.5	-	-	
CMD, D outputs (referenced to CK) in MMC and SD HS mode						
t_{OV}	Output valid time HS	fpp =50 MHz	-	11	12	ns
t_{OH}	Output hold time HS	fpp =50 MHz	9	-	-	
CMD, D inputs (referenced to CK) in SD default mode						
tISUD	Input setup time SD	fpp =25 MHz	3.5	-	-	ns
tIHD	Input hold time SD	fpp =25 MHz	2.5	-	-	
CMD, D outputs (referenced to CK) in SD default mode						
tOVD	Output valid default time SD	fpp =25 MHz	-	0.5	1.5	ns
tOHD	Output hold default time SD	fpp =25 MHz	0	-	-	

1. Guaranteed by characterization results.

Table 124. Dynamic characteristics: eMMC characteristics, V_{DD}=1.71V to 1.9V(1)(2)

Symbol	Parameter	Conditions	Min	Typ	Max	Unit
f_{PP}	Clock frequency in data transfer mode	-	0	-	50	MHz
-	SDMMC_CK/fPCLK2 frequency ratio	-	-	-	8/3	-
$t_{W(CKL)}$	Clock low time	fpp =50 MHz	9.5	10.5	-	ns
$t_{W(CKH)}$	Clock high time	fpp =50 MHz	8.5	9.5	-	
CMD, D inputs (referenced to CK) in eMMC mode						
t_{ISU}	Input setup time HS	fpp =50 MHz	3	-	-	ns
t_{IH}	Input hold time HS	fpp =50 MHz	4	-	-	
CMD, D outputs (referenced to CK) in eMMC mode						
t_{OV}	Output valid time HS	fpp =50 MHz	-	11	15.5	ns
t_{OH}	Output hold time HS	fpp =50 MHz	9.5	-	-	

1. Guaranteed by characterization results.
2. Cload = 20 pF.

LQFP144 device marking

The following figure gives an example of topside marking orientation versus pin 1 identifier location.

Other optional marking or inset/upset marks, which identify the parts throughout supply chain operations, are not indicated below.

Figure 88. LQFP144, 20 x 20mm, 144-pin low-profile quad flat package top view example

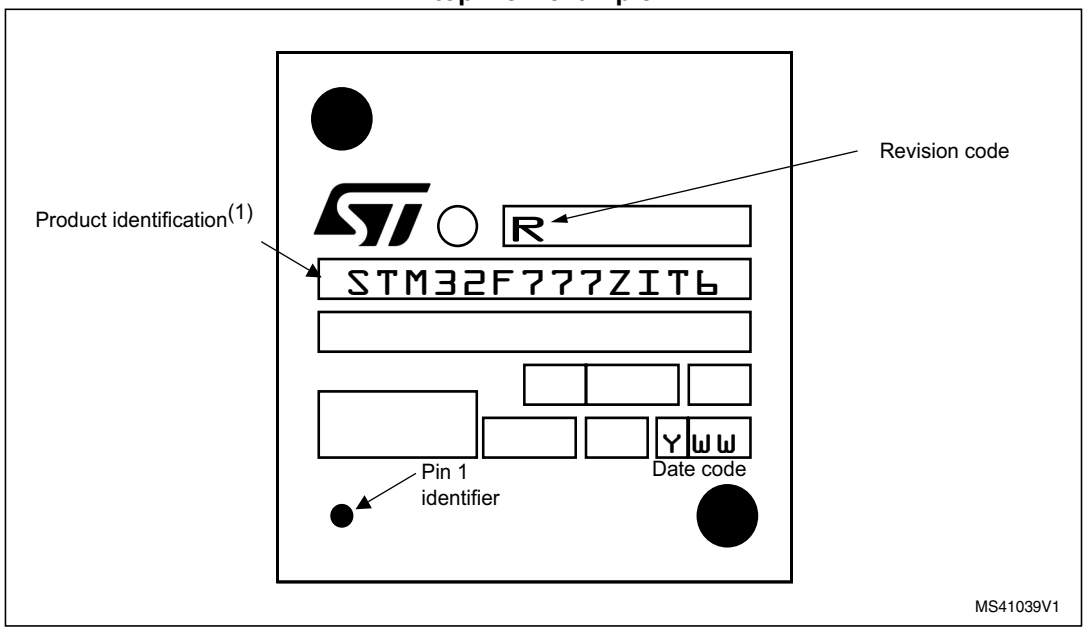

1. Parts marked as “ES”, “E” or accompanied by an Engineering Sample notification letter, are not yet qualified and therefore not yet ready to be used in production and any consequences deriving from such usage will not be at ST charge. In no event, ST will be liable for any customer usage of these engineering samples in production. ST Quality has to be contacted prior to any decision to use these Engineering samples to run qualification activity.

6.7 TFBGA216, 13 x 13 x 0.8 mm thin fine-pitch ball grid array package information

Figure 101. TFBGA216, 13 × 13 × 0.8 mm thin fine-pitch ball grid array package outline

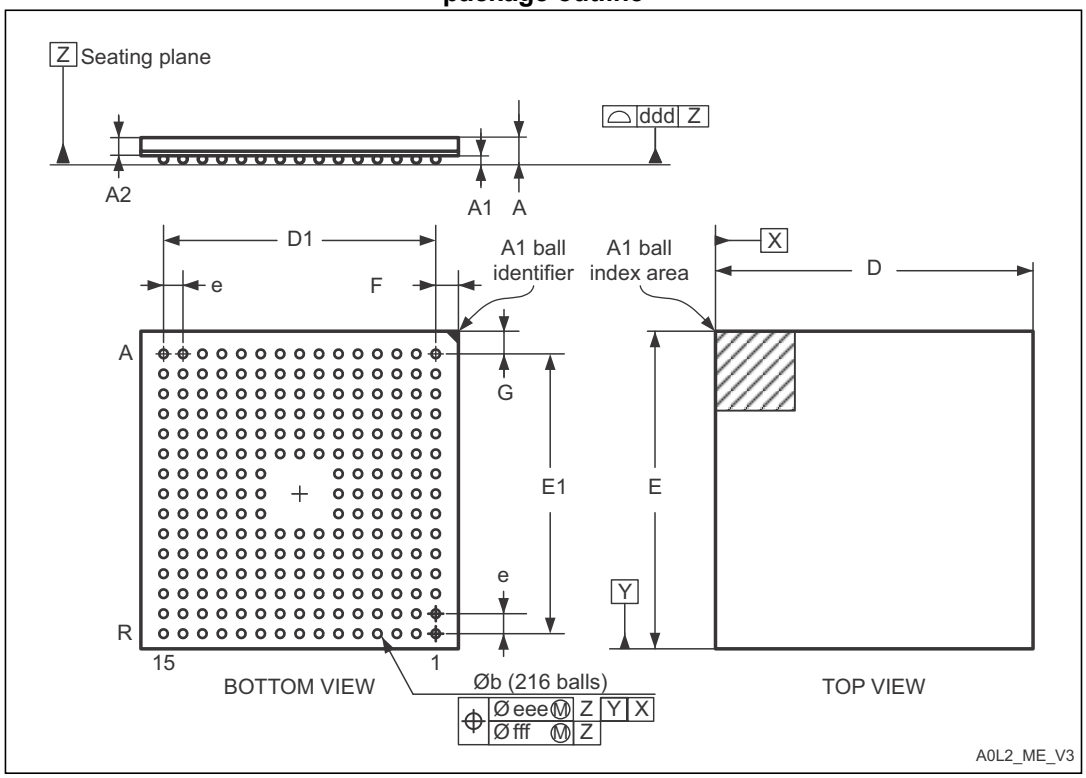

1. Drawing is not to scale.

Table 133. TFBGA216, 13 × 13 × 0.8 mm thin fine-pitch ball grid array package mechanical data

Symbol	millimeters			inches(1)		
	Min	Typ	Max	Min	Typ	Max
A	-	-	1.100	-	-	0.0433
A1	0.150	-	-	0.0059	-	-
A2	-	0.760	-	-	0.0299	-
b	0.350	0.400	0.450	0.0138	0.0157	0.0177
D	12.850	13.000	13.150	0.5118	0.5118	0.5177
D1	-	11.200	-	-	0.4409	-
E	12.850	13.000	13.150	0.5118	0.5118	0.5177
E1	-	11.200	-	-	0.4409	-
e	-	0.800	-	-	0.0315	-
F	-	0.900	-	-	0.0354	-

Table 133. TFBGA216, 13 × 13 × 0.8 mm thin fine-pitch ball grid array package mechanical data (continued)

Symbol	millimeters			inches[1]		
	Min	Typ	Max	Min	Typ	Max
G	-	0.900	-	-	0.0354	-
ddd	-	-	0.100	-	-	0.0039
eee	-	-	0.150	-	-	0.0059
fff	-	-	0.080	-	-	0.0031

1. Values in inches are converted from mm and rounded to 4 decimal digits.

Figure 102. TFBGA216, 13 x 13 mm, 0.8 mm pitch, thin fine-pitch ball grid array package recommended footprint

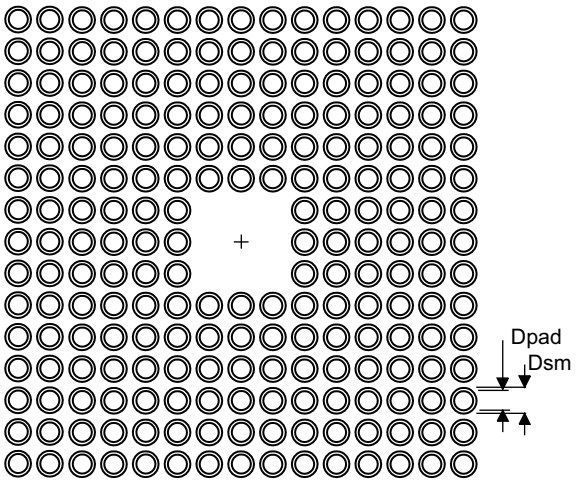

Table 134. TFBGA216 recommended PCB design rules (0.8 mm pitch BGA)

Dimension	Recommended values
Pitch	0.8
Dpad	0.400 mm
Dsm	0.470 mm typ. (depends on the soldermask registration tolerance)
Stencil opening	0.400 mm
Stencil thickness	Between 0.100 mm and 0.125 mm
Pad trace width	0.120 mm