Welcome to E-XFL.COM

What is "Embedded - Microcontrollers"?

"Embedded - Microcontrollers" refer to small, integrated circuits designed to perform specific tasks within larger systems. These microcontrollers are essentially compact computers on a single chip, containing a processor core, memory, and programmable input/output peripherals. They are called "embedded" because they are embedded within electronic devices to control various functions, rather than serving as standalone computers. Microcontrollers are crucial in modern electronics, providing the intelligence and control needed for a wide range of applications.

Applications of "Embedded - Microcontrollers"

Details	
Product Status	Obsolete
Core Processor	MIPS32® M4K™
Core Size	32-Bit Single-Core
Speed	80MHz
Connectivity	Ethernet, I²C, SPI, UART/USART, USB OTG
Peripherals	Brown-out Detect/Reset, DMA, POR, PWM, WDT
Number of I/O	83
Program Memory Size	512KB (512K x 8)
Program Memory Type	FLASH
EEPROM Size	-
RAM Size	128K x 8
Voltage - Supply (Vcc/Vdd)	2.3V ~ 3.6V
Data Converters	A/D 16x10b
Oscillator Type	Internal
Operating Temperature	-40°C ~ 85°C (TA)
Mounting Type	Surface Mount
Package / Case	124-VFTLA Dual Rows, Exposed Pad
Supplier Device Package	124-VTLA (9x9)
Purchase URL	https://www.e-xfl.com/product-detail/microchip-technology/pic32mx695f512lt-80i-tl

TABLE 7: PIN NAMES FOR 100-PIN USB AND CAN DEVICES (CONTINUED)

100-PIN TQFP (TOP VIEW)

PIC32MX534F064L
PIC32MX564F064L
PIC32MX564F128L
PIC32MX575F512L
PIC32MX575F256L

100

1

Pin #	Full Pin Name	Pin #	Full Pin Name
71	IC4/PMCS1/PMA14/RD11	86	VDD
72	SDO1/OC1/INT0/RD0	87	C1RX/PMD11/RF0
73	SOSCI/CN1/RC13	88	C1TX/PMD10/RF1
74	SOSCO/T1CK/CN0/RC14	89	PMD9/RG1
75	VSS	90	PMD8/RG0
76	OC2/RD1	91	TRCLK/RA6
77	OC3/RD2	92	TRD3/RA7
78	OC4/RD3	93	PMD0/RE0
79	IC5/PMD12/RD12	94	PMD1/RE1
80	PMD13/CN19/RD13	95	TRD2/RG14
81	OC5/PMWR/CN13/RD4	96	TRD1/RG12
82	PMRD/CN14/RD5	97	TRD0/RG13
83	PMD14/CN15/RD6	98	PMD2/RE2
84	PMD15/CN16/RD7	99	PMD3/RE3
85	VCAP	100	PMD4/RE4

Note 1: Shaded pins are 5V tolerant.

REGISTER 17-1: OCxCON: OUTPUT COMPARE 'x' CONTROL REGISTER

Bit Range	Bit 31/23/15/7	Bit 30/22/14/6	Bit 29/21/13/5	Bit 28/20/12/4	Bit 27/19/11/3	Bit 26/18/10/2	Bit 25/17/9/1	Bit 24/16/8/0
31:24	U-0	U-0	U-0	U-0	U-0	U-0	U-0	U-0
	—	—	—	—	—	—	—	—
23:16	U-0	U-0	U-0	U-0	U-0	U-0	U-0	U-0
	—	—	—	—	—	—	—	—
15:8	R/W-0	U-0	R/W-0	U-0	U-0	U-0	U-0	U-0
	ON(1)	—	SIDL	—	—	—	—	—
7:0	U-0	U-0	R/W-0	R-0	R/W-0	R/W-0	R/W-0	R/W-0
	—	—	OC32	OCFLT(2)	OCTSEL	OCM<2:0>		

Legend:			
R = Readable bit	W = Writable bit	U = Unimplemented bit, read as '0'	
-n = Value at POR	'1' = Bit is set	'0' = Bit is cleared	x = Bit is unknown

bit 31-16 **Unimplemented:** Read as '0'

bit 15 **ON:** Output Compare Module On bit(1)
- 1 = Output Compare module is enabled
- 0 = Output Compare module is disabled

bit 14 **Unimplemented:** Read as '0'

bit 13 **SIDL:** Stop in Idle Mode bit
- 1 = Discontinue operation when CPU enters Idle mode
- 0 = Continue operation when CPU is in Idle mode

bit 12-6 **Unimplemented:** Read as '0'

bit 5 **OC32:** 32-bit Compare Mode bit
- 1 = OCxR<31:0> and/or OCxRS<31:0> are used for comparisons to the 32-bit timer source
- 0 = OCxR<15:0> and OCxRS<15:0> are used for comparisons to the 16-bit timer source

bit 4 **OCFLT:** PWM Fault Condition Status bit(2)
- 1 = PWM Fault condition has occurred (only cleared in hardware)
- 0 = PWM Fault condition has not occurred

bit 3 **OCTSEL:** Output Compare Timer Select bit
- 1 = Timer3 is the clock source for this Output Compare module
- 0 = Timer2 is the clock source for this Output Compare module

bit 2-0 **OCM<2:0>:** Output Compare Mode Select bits
- 111 = PWM mode on OCx; Fault pin enabled
- 110 = PWM mode on OCx; Fault pin disabled
- 101 = Initialize OCx pin low; generate continuous output pulses on OCx pin
- 100 = Initialize OCx pin low; generate single output pulse on OCx pin
- 011 = Compare event toggles OCx pin
- 010 = Initialize OCx pin high; compare event forces OCx pin low
- 001 = Initialize OCx pin low; compare event forces OCx pin high
- 000 = Output compare peripheral is disabled but continues to draw current

Note 1: When using the 1:1 PBCLK divisor, the user's software should not read/write the peripheral's SFRs in the SYSCLK cycle immediately following the instruction that clears the module's ON bit.

2: This bit is only used when OCM<2:0> = 111. It is read as '0' in all other modes.

24.0 CONTROLLER AREA NETWORK (CAN)

Note: This data sheet summarizes the features of the PIC32MX5XX/6XX/7XX family of devices. It is not intended to be a comprehensive reference source. To complement the information in this data sheet, refer to **Section 34. "Controller Area Network (CAN)"** (DS60001154) in the PIC32 Family Reference Manual , which is available from the Microchip web site (www.microchip.com/PIC32).

The Controller Area Network (CAN) module supports the following key features:

- Standards Compliance:
  - Full CAN 2.0B compliance
  - Programmable bit rate up to 1 Mbps
- Message Reception and Transmission:
  - 32 message FIFOs
  - Each FIFO can have up to 32 messages for a total of 1024 messages
  - FIFO can be a transmit message FIFO or a receive message FIFO
  - User-defined priority levels for message FIFOs used for transmission
  - 32 acceptance filters for message filtering
  - Four acceptance filter mask registers for message filtering
  - Automatic response to remote transmit request
  - DeviceNet™ addressing support
- Additional Features:
  - Loopback, Listen All Messages, and Listen Only modes for self-test, system diagnostics and bus monitoring
  - Low-power operating modes
  - CAN module is a bus master on the PIC32 system bus
  - Use of DMA is not required
  - Dedicated time-stamp timer
  - Dedicated DMA channels
  - Data-only Message Reception mode

Figure 24-1 illustrates the general structure of the CAN module.

FIGURE 24-1: PIC32 CAN MODULE BLOCK DIAGRAM

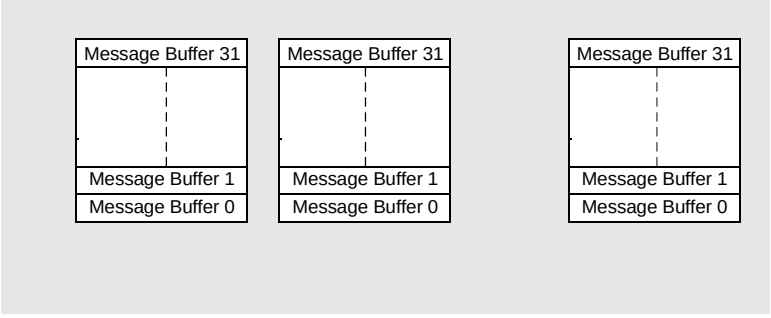

REGISTER 24-1: CiCON: CAN MODULE CONTROL REGISTER (CONTINUED)

bit 13 **SIDLE:** CAN Stop in Idle bit

1 = CAN Stops operation when system enters Idle mode
0 = CAN continues operation when system enters Idle mode

bit 12 **Unimplemented:** Read as '0'

bit 11 **CANBUSY:** CAN Module is Busy bit

1 = The CAN module is active
0 = The CAN module is completely disabled

bit 10-5 **Unimplemented:** Read as '0'

bit 4-0 **DNCNT<4:0>:** Device Net Filter Bit Number bits

10011-11111 = Invalid Selection (compare up to 18-bits of data with EID)
10010 = Compare up to data byte 2 bit 6 with EID17 (CiRXFn<17>)
•
•
•
00001 = Compare up to data byte 0 bit 7 with EID0 (CiRXFn<0>)
00000 = Do not compare data bytes

Note 1: If the user application clears this bit, it may take a number of cycles before the CAN module completes the current transaction and responds to this request. The user application should poll the CANBUSY bit to verify that the request has been honored.

25.0 ETHERNET CONTROLLER

Note: This data sheet summarizes the features of the PIC32MX5XX/6XX/7XX family of devices. It is not intended to be a comprehensive reference source. To complement the information in this data sheet, refer to **Section 35. "Ethernet Controller"** (DS60001155) in the PIC32 Family Reference Manual , which is available from the Microchip web site (www.microchip.com/PIC32).

The Ethernet controller is a bus master module that interfaces with an off-chip Physical Layer (PHY) to implement a complete Ethernet node in a system.

Key features of the Ethernet Controller include:

- Supports 10/100 Mbps data transfer rates
- Supports full-duplex and half-duplex operation
- Supports RMII and MII PHY interface
- Supports MIIM PHY management interface
- Supports both manual and automatic Flow Control
- RAM descriptor-based DMA operation for both receive and transmit path
- Fully configurable interrupts
- Configurable receive packet filtering
  - CRC check
  - 64-byte pattern match
  - Broadcast, multicast and unicast packets
  - Magic Packet™
  - 64-bit hash table
  - Runt packet
- Supports packet payload checksum calculation
- Supports various hardware statistics counters

Figure 25-1 illustrates a block diagram of the Ethernet controller.

FIGURE 25-1: ETHERNET CONTROLLER BLOCK DIAGRAM

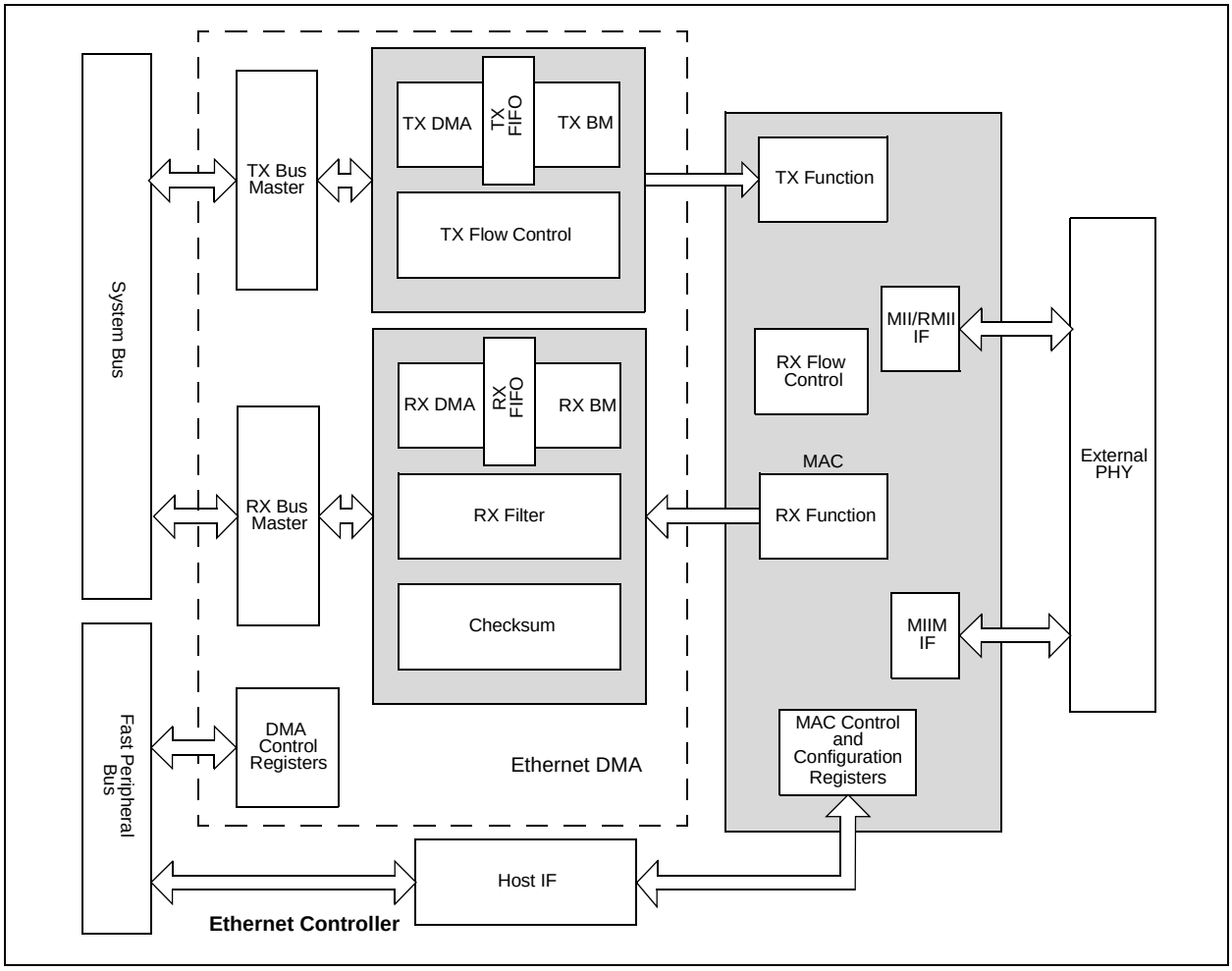

REGISTER 25-24: EMAC1CFG2: ETHERNET CONTROLLER MAC CONFIGURATION 2 REGISTER

Bit Range	Bit 31/23/15/7	Bit 30/22/14/6	Bit 29/21/13/5	Bit 28/20/12/4	Bit 27/19/11/3	Bit 26/18/10/2	Bit 25/17/9/1	Bit 25/16/8/0
31:24	U-0	U-0	U-0	U-0	U-0	U-0	U-0	U-0
	—	—	—	—	—	—	—	—
23:16	U-0	U-0	U-0	U-0	U-0	U-0	U-0	U-0
	—	—	—	—	—	—	—	—
15:8	U-0	R/W-1	R/W-0	R/W-0	U-0	U-0	R/W-0	R/W-0
	—	EXCESS DFR	BPNOBK OFF	NOBK OFF	—	—	LONGPRE	PUREPRE
7:0	R/W-1	R/W-0	R/W-1	R/W-1	R/W-0	R/W-0	R/W-1	R/W-0
	AUTO PAD(1,2)	VLAN PAD(1,2)	PAD ENABLE(1,3)	CRC ENABLE	DELAYCRC	HUGEFRM	LENGTHCK	FULLDPLX

Legend:			
R = Readable bit	W = Writable bit	U = Unimplemented bit, read as ‘0’	
-n = Value at POR	‘1’ = Bit is set	‘0’ = Bit is cleared	x = Bit is unknown

bit 31-15 **Unimplemented:** Read as ‘0’

bit 14 **EXCESSDER:** Excess Defer bit
- 1 = The MAC will defer to carrier indefinitely as per the Standard
- 0 = The MAC will abort when the excessive deferral limit is reached

bit 13 **BPNOBKOFF:** Backpressure/No Backoff bit
- 1 = The MAC after incidentally causing a collision during backpressure will immediately retransmit without backoff reducing the chance of further collisions and ensuring transmit packets get sent
- 0 = The MAC will not remove the backoff

bit 12 **NOBKOFF:** No Backoff bit
- 1 = Following a collision, the MAC will immediately retransmit rather than using the Binary Exponential Back-off algorithm as specified in the Standard
- 0 = Following a collision, the MAC will use the Binary Exponential Backoff algorithm

bit 11-10 **Unimplemented:** Read as ‘0’

bit 9 **LONGPRE:** Long Preamble Enforcement bit
- 1 = The MAC only allows receive packets which contain preamble fields less than 12 bytes in length
- 0 = The MAC allows any length preamble as per the Standard

bit 8 **PUREPRE:** Pure Preamble Enforcement bit
- 1 = The MAC will verify the content of the preamble to ensure it contains 0x55 and is error-free. A packet with errors in its preamble is discarded
- 0 = The MAC does not perform any preamble checking

bit 7 **AUTOPAD:** Automatic Detect Pad Enable bit(1,2)
- 1 = The MAC will automatically detect the type of frame, either tagged or untagged, by comparing the two octets following the source address with 0x8100 (VLAN Protocol ID) and pad accordingly
- 0 = The MAC does not perform automatic detection

Note 1: Table 25-6 provides a description of the pad function based on the configuration of this register.
2: This bit is ignored if the PADENABLE bit is cleared.
3: This bit is used in conjunction with the AUTOPAD and VLANPAD bits.

Note: Both 16-bit and 32-bit accesses are allowed to these registers (including the SET, CLR and INV registers). 8-bit accesses are not allowed and are ignored by the hardware

REGISTER 27-1: CVRCON: COMPARATOR VOLTAGE REFERENCE CONTROL REGISTER

Bit Range	Bit 31/23/15/7	Bit 30/22/14/6	Bit 29/21/13/5	Bit 28/20/12/4	Bit 27/19/11/3	Bit 26/18/10/2	Bit 25/17/9/1	Bit 24/16/8/0
31:24	U-0	U-0	U-0	U-0	U-0	U-0	U-0	U-0
	—	—	—	—	—	—	—	—
23:16	U-0	U-0	U-0	U-0	U-0	U-0	U-0	U-0
	—	—	—	—	—	—	—	—
15:8	R/W-0	U-0	U-0	U-0	U-0	R/W-0	R/W-0	R/W-1
	ON(1)	—	—	—	—	VREFSEL(2)	BGSEL<1:0>(2)	
7:0	U-0	R/W-0	R/W-0	R/W-0	R/W-0	R/W-0	R/W-0	R/W-0
	—	CVROE	CVRR	CVRSS	CVR<3:0>			

Legend:			
R = Readable bit	W = Writable bit	U = Unimplemented bit, read as ‘0’	
-n = Value at POR	‘1’ = Bit is set	‘0’ = Bit is cleared	x = Bit is unknown

bit 31-16 **Unimplemented:** Read as ‘0’

bit 15 **ON:** Comparator Voltage Reference On bit(1)
Setting or clearing this bit does not affect the other bits in this register.
1 = Module is enabled
0 = Module is disabled and does not consume current

bit 14-11 **Unimplemented:** Read as ‘0’

bit 10 **VREFSEL:** Voltage Reference Select bit(2)
1 = $CV_{REF} = V_{REF+}$
0 = CV_{REF} is generated by the resistor network

bit 9-8 **BGSEL<1:0>:** Band Gap Reference Source bits(2)
11 = $IV_{REF} = V_{REF+}$
10 = Reserved
01 = IV_{REF} = 0.6V (nominal, default)
00 = IV_{REF} = 1.2V (nominal)

bit 7 **Unimplemented:** Read as ‘0’

bit 6 **CVROE:** CV_{REFOUT} Enable bit
1 = Voltage level is output on CV_{REFOUT} pin
0 = Voltage level is disconnected from CV_{REFOUT} pin

bit 5 **CVRR:** CV_{REF} Range Selection bit
1 = 0 to 0.625 CV_{RSRC}, with CV_{RSRC}/24 step size
0 = 0.25 CV_{RSRC} to 0.719 CV_{RSRC}, with CV_{RSRC}/32 step size

bit 4 **CVRSS:** CV_{REF} Source Selection bit
1 = Comparator voltage reference source, $CV_{RSRC} = (V_{REF+}) – (V_{REF-})$
0 = Comparator voltage reference source, $CV_{RSRC} = AV_{DD} – AV_{SS}$

bit 3-0 **CVR<3:0>:** CV_{REF} Value Selection $0 \le CVR<3:0> \le 15$ bits
When CVRR = 1:
$CV_{REF} = (CVR<3:0>/24) \bullet (CV_{RSRC})$
When CVRR = 0:
$CV_{REF} = 1/4 \bullet (CV_{RSRC}) + (CVR<3:0>/32) \bullet (CV_{RSRC})$

Note 1: When using the 1:1 PBCLK divisor, the user’s software should not read/write the peripheral’s SFRs in the SYSCLK cycle immediately following the instruction that clears the module’s ON bit.

2: These bits are not available on PIC32MX575/675/775/795 devices. On these devices, the reset value for CVRON is ‘0000’.

REGISTER 29-1: DEVCFG0: DEVICE CONFIGURATION WORD 0 (CONTINUED)

bit 3 **ICESEL:** In-Circuit Emulator/Debugger Communication Channel Select bit
1 = PGEC2/PGED2 pair is used
0 = PGEC1/PGED1 pair is used

bit 2 **Reserved:** Write '1'

bit 1-0 **DEBUG<1:0>:** Background Debugger Enable bits (forced to '11' if code-protect is enabled)
11 = Debugger is disabled
10 = Debugger is enabled
01 = Reserved (same as '11' setting)
00 = Reserved (same as '11' setting)

© 2009-2016 Microchip Technology Inc.

TABLE 32-6: DC CHARACTERISTICS: IDLE CURRENT (I_{IDLE})

DC CHARACTERISTICS				Standard Operating Conditions: 2.3V to 3.6V (unless otherwise stated) Operating temperature -40°C ≤ TA ≤ +85°C for Industrial -40°C ≤ TA ≤ +105°C for V-Temp		
Parameter No.	**Typical(2)**	**Max.**	**Units**	**Conditions**		
Idle Current (I_{IDLE})(1,3) for PIC32MX575/675/695/775/795 Family Devices						
DC30	4.5	6.5	mA	-40ºC, +25ºC, +85ºC	—	4 MHz
DC30b	5	7		+105°C		
DC31	13	15	mA	-40ºC, +25ºC, +85ºC	—	25 MHz
DC32	28	30	mA	-40ºC, +25ºC, +85ºC	—	60 MHz
DC33	36	42	mA	-40ºC, +25ºC, +85ºC	—	80 MHz
DC33b	39	45	mA	+105°C		
DC34	—	40	µA	-40°C	2.3V	LPRC (31 kHz)
DC34a		75		+25°C		
DC34b		800		+85°C		
DC34c		1000		+105°C		
DC35	35	—	µA	-40°C	3.3V	
DC35a	65			+25°C		
DC35b	600			+85°C		
DC35c	800			+105°C		
DC36	—	43	µA	-40°C	3.6V	
DC36a		106		+25°C		
DC36b		800		+85°C		
DC36c		1000		+105°C		

Note 1: The test conditions for I_{IDLE} current measurements are as follows:

- Oscillator mode is EC (for 8 MHz and below) and EC+PLL (for above 8 MHz) with OSC1 driven by external square wave from rail-to-rail, (OSC1 input clock input over/undershoot < 100 mV required)

© 2009-2016 Microchip Technology Inc.

32.2 AC Characteristics and Timing Parameters

The information contained in this section defines PIC32MX5XX/6XX/7XX AC characteristics and timing parameters.

FIGURE 32-1: LOAD CONDITIONS FOR DEVICE TIMING SPECIFICATIONS

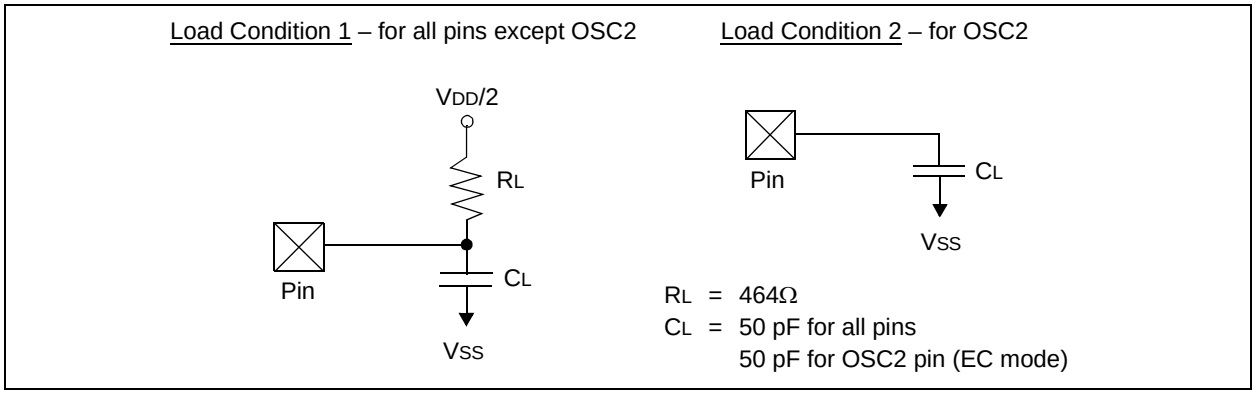

TABLE 32-16: CAPACITIVE LOADING REQUIREMENTS ON OUTPUT PINS

AC CHARACTERISTICS			Standard Operating Conditions: 2.3V to 3.6V (unless otherwise stated) Operating temperature -40°C ≤ TA ≤ +85°C for Industrial -40°C ≤ TA ≤ +105°C for V-Temp				
Param. No.	**Symbol**	**Characteristics**	**Min.**	**Typical(1)**	**Max.**	**Units**	**Conditions**
DO50	Cosco	OSC2 pin	—	—	15	pF	In XT and HS modes when an external crystal is used to drive OSC1
DO56	CIO	All I/O pins and OSC2	—	—	50	pF	In EC mode
DO58	CB	SCLx, SDAx	—	—	400	pF	In I^2C mode

Note 1: Data in “Typical” column is at 3.3V, 25°C unless otherwise stated. Parameters are for design guidance only and are not tested.

FIGURE 32-2: EXTERNAL CLOCK TIMING

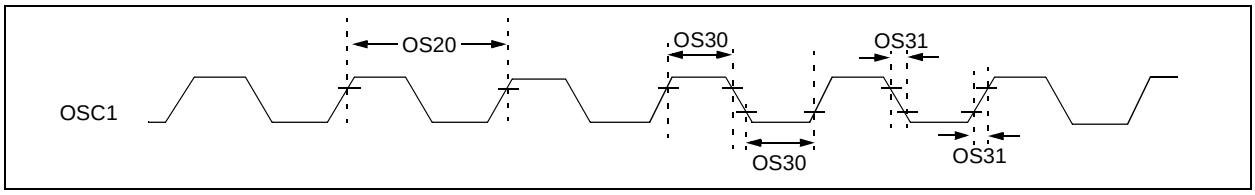

© 2009-2016 Microchip Technology Inc.

TABLE 32-32: I2Cx BUS DATA TIMING REQUIREMENTS (MASTER MODE)

AC CHARACTERISTICS				Standard Operating Conditions: 2.3V to 3.6V (unless otherwise stated) Operating temperature -40°C ≤ TA ≤ +85°C for Industrial -40°C ≤ TA ≤ +105°C for V-Temp			
Param. No.	**Symbol**	**Characteristics**		**Min.(1)**	**Max.**	**Units**	**Conditions**
IM10	TLO:SCL	Clock Low Time	100 kHz mode	TPB * (BRG + 2)	—	μs	—
			400 kHz mode	TPB * (BRG + 2)	—	μs	—
			1 MHz mode(2)	TPB * (BRG + 2)	—	μs	—
IM11	THI:SCL	Clock High Time	100 kHz mode	TPB * (BRG + 2)	—	μs	—
			400 kHz mode	TPB * (BRG + 2)	—	μs	—
			1 MHz mode(2)	TPB * (BRG + 2)	—	μs	—
IM20	TF:SCL	SDAx and SCLx Fall Time	100 kHz mode	—	300	ns	CB is specified to be from 10 to 400 pF
			400 kHz mode	20 + 0.1 CB	300	ns	
			1 MHz mode(2)	—	100	ns	
IM21	TR:SCL	SDAx and SCLx Rise Time	100 kHz mode	—	1000	ns	CB is specified to be from 10 to 400 pF
			400 kHz mode	20 + 0.1 CB	300	ns	
			1 MHz mode(2)	—	300	ns	
IM25	TSU:DAT	Data Input Setup Time	100 kHz mode	250	—	ns	—
			400 kHz mode	100	—	ns	
			1 MHz mode(2)	100	—	ns	
IM26	THD:DAT	Data Input Hold Time	100 kHz mode	0	—	μs	—
			400 kHz mode	0	0.9	μs	
			1 MHz mode(2)	0	0.3	μs	
IM30	TSU:STA	Start Condition Setup Time	100 kHz mode	TPB * (BRG + 2)	—	ns	Only relevant for Repeated Start condition
			400 kHz mode	TPB * (BRG + 2)	—	ns	
			1 MHz mode(2)	TPB * (BRG + 2)	—	ns	
IM31	THD:STA	Start Condition Hold Time	100 kHz mode	TPB * (BRG + 2)	—	ns	After this period, the first clock pulse is generated
			400 kHz mode	TPB * (BRG + 2)	—	ns	
			1 MHz mode(2)	TPB * (BRG + 2)	—	ns	
IM33	TSU:STO	Stop Condition Setup Time	100 kHz mode	TPB * (BRG + 2)	—	ns	—
			400 kHz mode	TPB * (BRG + 2)	—	ns	
			1 MHz mode(2)	TPB * (BRG + 2)	—	ns	
IM34	THD:STO	Stop Condition Hold Time	100 kHz mode	TPB * (BRG + 2)	—	ns	—
			400 kHz mode	TPB * (BRG + 2)	—	ns	
			1 MHz mode(2)	TPB * (BRG + 2)	—	ns	
IM40	TAA:SCL	Output Valid from Clock	100 kHz mode	—	3500	ns	—
			400 kHz mode	—	1000	ns	—
			1 MHz mode(2)	—	350	ns	—
IM45	TBF:SDA	Bus Free Time	100 kHz mode	4.7	—	μs	The amount of time the bus must be free before a new transmission can start
			400 kHz mode	1.3	—	μs	
			1 MHz mode(2)	0.5	—	μs	
IM50	CB	Bus Capacitive Loading		—	400	pF	—
IM51	TPGD	Pulse Gobbler Delay(3)		52	312	ns	—

Note 1: BRG is the value of the I^2C Baud Rate Generator.

2: Maximum pin capacitance = 10 pF for all I2Cx pins (only for 1 MHz mode).

3: The typical value for this parameter is 104 ns.

© 2009-2016 Microchip Technology Inc.

FIGURE 32-27: PARALLEL MASTER PORT WRITE TIMING DIAGRAM

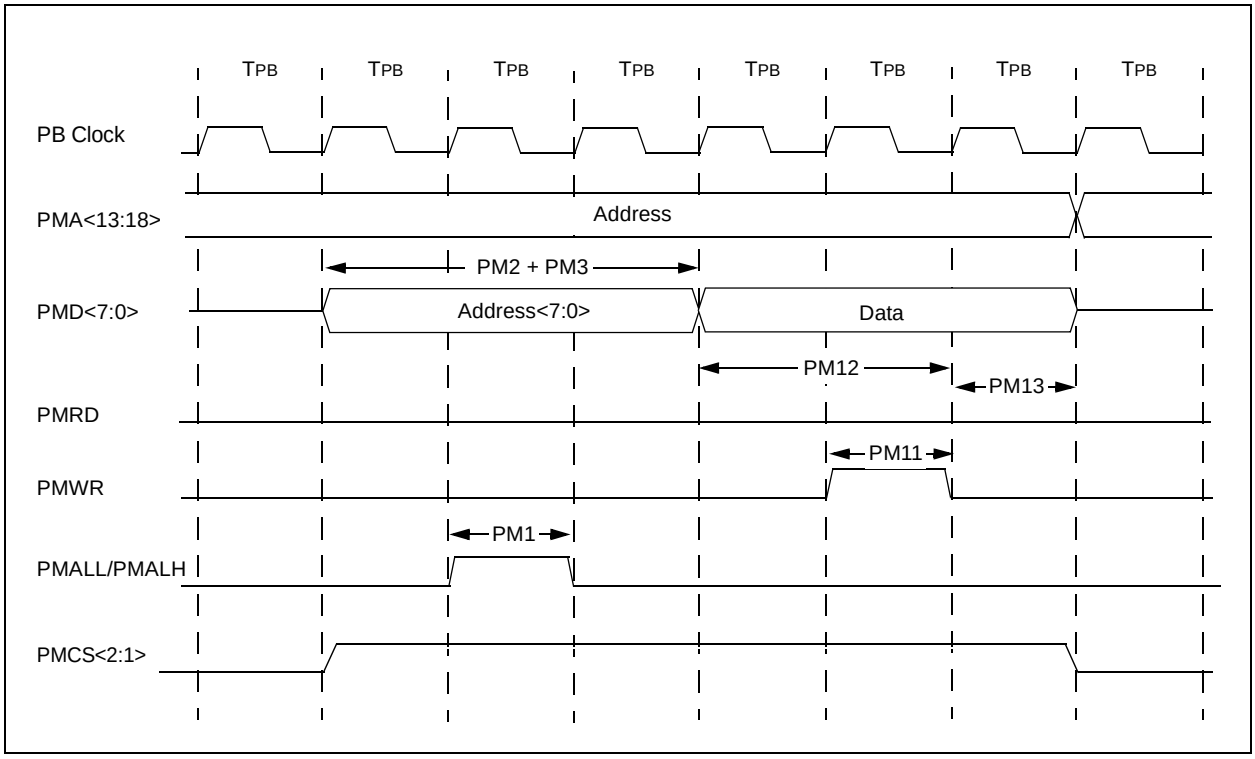

TABLE 32-41: PARALLEL MASTER PORT WRITE TIMING REQUIREMENTS

AC CHARACTERISTICS			Standard Operating Conditions: 2.3V to 3.6V (unless otherwise stated) Operating temperature -40°C ≤ TA ≤ +85°C for Industrial -40°C ≤ TA ≤ +105°C for V-Temp				
Param. No.	**Symbol**	**Characteristics(1)**	**Min.**	**Typical**	**Max.**	**Units**	**Conditions**
PM11	TWR	PMWR Pulse Width	—	1 TPB	—	—	—
PM12	TDVSU	Data Out Valid before PMWR or PMENB goes Inactive (data setup time)	—	2 TPB	—	—	—
PM13	TDVHOLD	PMWR or PMEMB Invalid to Data Out Invalid (data hold time)	—	1 TPB	—	—	—

Note 1: These parameters are characterized, but not tested in manufacturing.

© 2009-2016 Microchip Technology Inc.