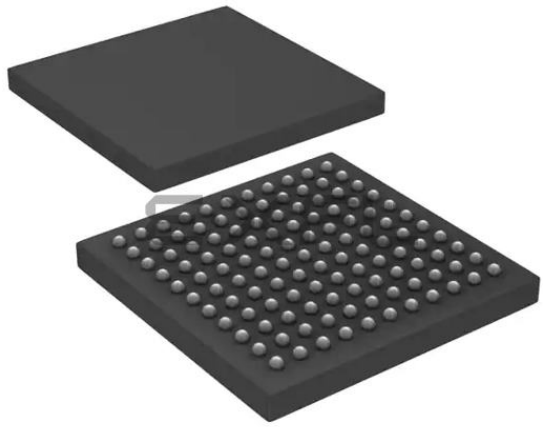

Welcome to E-XFL.COM

What is "Embedded - Microcontrollers"?

"Embedded - Microcontrollers" refer to small, integrated circuits designed to perform specific tasks within larger systems. These microcontrollers are essentially compact computers on a single chip, containing a processor core, memory, and programmable input/output peripherals. They are called "embedded" because they are embedded within electronic devices to control various functions, rather than serving as standalone computers. Microcontrollers are crucial in modern electronics, providing the intelligence and control needed for a wide range of applications.

Applications of "Embedded - Microcontrollers"

Details	
Product Status	Active
Core Processor	MIPS32® M4K™
Core Size	32-Bit Single-Core
Speed	80MHz
Connectivity	CANbus, Ethernet, I²C, SPI, UART/USART, USB OTG
Peripherals	Brown-out Detect/Reset, DMA, POR, PWM, WDT
Number of I/O	-
Program Memory Size	512KB (512K x 8)
Program Memory Type	FLASH
EEPROM Size	-
RAM Size	64K x 8
Voltage - Supply (Vcc/Vdd)	2.3V ~ 3.6V
Data Converters	A/D 16x10b
Oscillator Type	Internal
Operating Temperature	-40°C ~ 105°C (TA)
Mounting Type	Surface Mount
Package / Case	121-TFBGA
Supplier Device Package	121-TFBGA (10x10)
Purchase URL	https://www.e-xfl.com/product-detail/microchip-technology/pic32mx775f512l-80v-bg

TABLE 8: PIN NAMES FOR 100-PIN USB AND ETHERNET DEVICES

100-PIN TQFP (TOP VIEW)

PIC32MX664F064L
PIC32MX664F128L
PIC32MX675F256L
PIC32MX675F512L
PIC32MX695F512L

100

1

Pin #	Full Pin Name	Pin #	Full Pin Name
1	AERXERR/RG15	36	VSS
2	VDD	37	VDD
3	PMD5/RE5	38	TCK/RA1
4	PMD6/RE6	39	SCK4/U5TX/U2RTS/RF13
5	PMD7/RE7	40	SS4/U5RX/U2CTS/RF12
6	T2CK/RC1	41	AN12/ERXD0/AECRS/PMA11/RB12
7	T3CK/RC2	42	AN13/ERXD1/AECOL/PMA10/RB13
8	T4CK/RC3	43	AN14/ERXD2/AETXD3/PMALH/PMA1/RB14
9	T5CK/SDI1/RC4	44	AN15/ERXD3/AETXD2/OCFB/PMALL/PMA0/CN12/RB15
10	ECOL/SCK2/U6TX/U3RTS/PMA5/CN8/RG6	45	VSS
11	ECRS/SDA4/SDI2/U3RX/PMA4/CN9/RG7	46	VDD
12	ERXDV/AERXDV/ECRSDV/AECRSDV/SCL4/SDO2/U3TX/PMA3/CN10/RG8	47	AETXD0/SS3/U4RX/U1CTS/CN20/RD14
13	MCLR	48	AETXD1/SCK3/U4TX/U1RTS/CN21/RD15
14	ERXCLK/AERXCLK/EREFCLK/AEREFCLK/SS2/U6RX/U3CTS/PMA2/CN11/RG9	49	SDA5/SDI4/U2RX/PMA9/CN17/RF4
15	VSS	50	SCL5/SDO4/U2TX/PMA8/CN18/RF5
16	VDD	51	USBID/RF3
17	TMS/RA0	52	SDA3/SDI3/U1RX/RF2
18	AERXD0/INT1/RE8	53	SCL3/SDO3/U1TX/RF8
19	AERXD1/INT2/RE9	54	VBUS
20	AN5/C1IN+/VBUSON/CN7/RB5	55	VUSB3V3
21	AN4/C1IN-/CN6/RB4	56	D-/RG3
22	AN3/C2IN+/CN5/RB3	57	D+/RG2
23	AN2/C2IN-/CN4/RB2	58	SCL2/RA2
24	PGEC1/AN1/CN3/RB1	59	SDA2/RA3
25	PGED1/AN0/CN2/RB0	60	TDI/RA4
26	PGEC2/AN6/OCFA/RB6	61	TDO/RA5
27	PGED2/AN7/RB7	62	VDD
28	VREF-/CVREF-/AERXD2/PMA7/RA9	63	OSC1/CLKI/RC12
29	VREF+/CVREF+/AERXD3/PMA6/RA10	64	OSC2/CLKO/RC15
30	AVDD	65	VSS
31	AVSS	66	AETXCLK/SCL1/INT3/RA14
32	AN8/C1OUT/RB8	67	AETXEN/SDA1/INT4/RA15
33	AN9/C2OUT/RB9	68	RTCC/EMDIO/AEMDIO/IC1/RD8
34	AN10/CVREFOUT/PMA13/RB10	69	SS1/IC2/RD9
35	AN11/ERXERR/AETXERR/PMA12/RB11	70	SCK1/IC3/PMCS2/PMA15/RD10

Note 1: Shaded pins are 5V tolerant.

© 2009-2016 Microchip Technology Inc.

5.1 Control Registers

TABLE 5-1: FLASH CONTROLLER REGISTER MAP

Virtual Address (BF80_#)	Register Name	Bit Range	Bits																All Resets
			31/15	30/14	29/13	28/12	27/11	26/10	25/9	24/8	23/7	22/6	21/5	20/4	19/3	18/2	17/1	16/0	
F400	NVMCON(1)	31:16	—	—	—	—	—	—	—	—	—	—	—	—	—	—	—	—	0000
		15:0	WR	WREN	WRERR	LVDERR	LVDSTAT	—	—	—	—	—	—	—	NVMOP<3:0>				0000
F410	NVMKEY	31:16	NVMKEY<31:0>																0000
		15:0																	0000
F420	NVMADDR(1)	31:16	NVMADDR<31:0>																0000
		15:0																	0000
F430	NVMDATA	31:16	NVMDATA<31:0>																0000
		15:0																	0000
F440	NVMSRC ADDR	31:16	NVMSRCADDR<31:0>																0000
		15:0																	0000

Legend: x = unknown value on Reset; — = unimplemented, read as '0'. Reset values are shown in hexadecimal.

Note 1: This register has corresponding CLR, SET and INV registers at their virtual addresses, plus offsets of 0x4, 0x8 and 0xC, respectively. See **Section 12.1.1 "CLR, SET and INV Registers"** for more information.

© 2009-2016 Microchip Technology Inc.

TABLE 7-5: INTERRUPT REGISTER MAP FOR PIC32MX534F064L, PIC32MX564F064L, PIC32MX564F128L PIC32MX575F512L AND PIC32MX575F256L DEVICES

Virtual Address (BF88_#)	Register Name[1]	Bit Range	Bits																All Resets
			31/15	30/14	29/13	28/12	27/11	26/10	25/9	24/8	23/7	22/6	21/5	20/4	19/3	18/2	17/1	16/0	
1000	INTCON	31:16	—	—	—	—	—	—	—	—	—	—	—	—	—	—	—	SS0	0000
		15:0	—	—	—	MVEC	—	TPC<2:0>			—	—	—	INT4EP	INT3EP	INT2EP	INT1EP	INT0EP	0000
1010	INTSTAT[3]	31:16	—	—	—	—	—	—	—	—	—	—	—	—	—	—	—	—	0000
		15:0	—	—	—	—	—	SRIPL<2:0>			—	—	VEC<5:0>						0000
1020	IPTMR	31:16	IPTMR<31:0>																0000
		15:0																	0000
1030	IFS0	31:16	I2C1MIF	I2C1SIF	I2C1BIF	U1TXIF SPI3TXIF I2C3MIF	U1RXIF SPI3RXIF I2C3SIF	U1EIF SPI3EIF I2C3BIF	SPI1TXIF	SPI1RXIF	SPI1EIF	OC5IF	IC5IF	T5IF	INT4IF	OC4IF	IC4IF	T4IF	0000
		15:0	INT3IF	OC3IF	IC3IF	T3IF	INT2IF	OC2IF	IC2IF	T2IF	INT1IF	OC1IF	IC1IF	T1IF	INT0IF	CS1IF	CS0IF	CTIF	0000
1040	IFS1	31:16	IC3EIF	IC2EIF	IC1EIF	—	—	CAN1IF	USBIF	FCEIF	DMA7IF[2]	DMA6IF[2]	DMA5IF[2]	DMA4IF[2]	DMA3IF	DMA2IF	DMA1IF	DMA0IF	0000
		15:0	RTCCIF	FSCMIF	I2C2MIF	I2C2SIF	I2C2BIF	U2TXIF SPI4TXIF I2C5MIF	U2RXIF SPI4RXIF I2C5SIF	U2EIF SPI4EIF I2C5BIF	U3TXIF SPI2TXIF I2C4MIF	U3RXIF SPI2RXIF I2C4SIF	U3EIF SPI2EIF I2C4BIF	CMP2IF	CMP1IF	PMPIF	AD1IF	CNIF	0000
1050	IFS2	31:16	—	—	—	—	—	—	—	—	—	—	—	—	—	—	—	—	0000
		15:0	—	—	—	—	U5TXIF	U5RXIF	U5EIF	U6TXIF	U6RXIF	U6EIF	U4TXIF	U4RXIF	U4EIF	PMPEIF	IC5EIF	IC4EIF	0000
1060	IEC0	31:16	I2C1MIE	I2C1SIE	I2C1BIE	U1TXIE SPI3TXIE I2C3MIE	U1RXIE SPI3RXIE I2C3SIE	U1EIE SPI3EIE I2C3BIE	SPI1TXIE	SPI1RXIE	SPI1EIE	OC5IE	IC5IE	T5IE	INT4IE	OC4IE	IC4IE	T4IE	0000
		15:0	INT3IE	OC3IE	IC3IE	T3IE	INT2IE	OC2IE	IC2IE	T2IE	INT1IE	OC1IE	IC1IE	T1IE	INT0IE	CS1IE	CS0IE	CTIE	0000
1070	IEC1	31:16	IC3EIE	IC2EIE	IC1EIE	—	—	CAN1IE	USBIE	FCEIE	DMA7IE[2]	DMA6IE[2]	DMA5IE[2]	DMA4IE[2]	DMA3IE	DMA2IE	DMA1IE	DMA0IE	0000
		15:0	RTCCIE	FSCMIE	I2C2MIE	I2C2SIE	I2C2BIE	U2TXIE SPI4TXIE I2C5MIE	U2RXIE SPI4RXIE I2C5SIE	U2EIE SPI4EIE I2C5BIE	U3TXIE SPI2TXIE I2C4MIE	U3RXIE SPI2RXIE I2C4SIE	U3EIE SPI2EIE I2C4BIE	CMP2IE	CMP1IE	PMPIE	AD1IE	CNIE	0000
1080	IEC2	31:16	—	—	—	—	—	—	—	—	—	—	—	—	—	—	—	—	0000
		15:0	—	—	—	—	U5TXIE	U5RXIE	U5EIE	U6TXIE	U6RXIE	U6EIE	U4TXIE	U4RXIE	U4EIE	PMPEIE	IC5EIE	IC4EIE	0000
1090	IPC0	31:16	—	—	—	INT0IP<2:0>			INT0IS<1:0>		—	—	—	CS1IP<2:0>			CS1IS<1:0>		0000
		15:0	—	—	—	CS0IP<2:0>			CS0IS<1:0>		—	—	—	CTIP<2:0>			CTIS<1:0>		0000
10A0	IPC1	31:16	—	—	—	INT1IP<2:0>			INT1IS<1:0>		—	—	—	OC1IP<2:0>			OC1IS<1:0>		0000
		15:0	—	—	—	IC1IP<2:0>			IC1IS<1:0>		—	—	—	T1IP<2:0>			T1IS<1:0>		0000
10B0	IPC2	31:16	—	—	—	INT2IP<2:0>			INT2IS<1:0>		—	—	—	OC2IP<2:0>			OC2IS<1:0>		0000
		15:0	—	—	—	IC2IP<2:0>			IC2IS<1:0>		—	—	—	T2IP<2:0>			T2IS<1:0>		0000
10C0	IPC3	31:16	—	—	—	INT3IP<2:0>			INT3IS<1:0>		—	—	—	OC3IP<2:0>			OC3IS<1:0>		0000
		15:0	—	—	—	IC3IP<2:0>			IC3IS<1:0>		—	—	—	T3IP<2:0>			T3IS<1:0>		0000

Legend: x = unknown value on Reset; — = unimplemented, read as '0'. Reset values are shown in hexadecimal.

Note 1: Except where noted, all registers in this table have corresponding CLR, SET and INV registers at their virtual addresses, plus offsets of 0x4, 0x8 and 0xC, respectively. See **Section 12.1.1 "CLR, SET and INV Registers"** for more information.

2: These bits are not available on PIC32MX534/564 devices.

3: This register does not have associated CLR, SET, and INV registers.

© 2009-2016 Microchip Technology Inc.

REGISTER 9-3: CHETAG: CACHE TAG REGISTER

Bit Range	Bit 31/23/15/7	Bit 30/22/14/6	Bit 29/21/13/5	Bit 28/20/12/4	Bit 27/19/11/3	Bit 26/18/10/2	Bit 25/17/9/1	Bit 24/16/8/0
31:24	R/W-0	U-0	U-0	U-0	U-0	U-0	U-0	U-0
	LTAGBOOT	—	—	—	—	—	—	—
23:16	R/W-x	R/W-x	R/W-x	R/W-x	R/W-x	R/W-x	R/W-x	R/W-x
	LTAG<19:12>							
15:8	R/W-x	R/W-x	R/W-x	R/W-x	R/W-x	R/W-x	R/W-x	R/W-x
	LTAG<11:4>							
7:0	R/W-x	R/W-x	R/W-x	R/W-x	R/W-0	R/W-0	R/W-1	U-0
	LTAG<3:0>				LVALID	LLOCK	LTYPE	—

Legend:			
R = Readable bit	W = Writable bit	U = Unimplemented bit, read as ‘0’	
-n = Value at POR	‘1’ = Bit is set	‘0’ = Bit is cleared	x = Bit is unknown

bit 31 **LTAGBOOT:** Line Tag Address Boot bit
`1` = The line is in the 0x1D000000 (physical) area of memory
`0` = The line is in the 0x1FC00000 (physical) area of memory

bit 30-24 **Unimplemented:** Write ‘`0`’; ignore read

bit 23-4 **LTAG<19:0>:** Line Tag Address bits
LTAG<19:0> bits are compared against physical address to determine a hit. Because its address range and position of PFM in kernel space and user space, the LTAG PFM address is identical for virtual addresses, (system) physical addresses, and PFM physical addresses.

bit 3 **LVALID:** Line Valid bit
`1` = The line is valid and is compared to the physical address for hit detection
`0` = The line is not valid and is not compared to the physical address for hit detection

bit 2 **LLOCK:** Line Lock bit
`1` = The line is locked and will not be replaced
`0` = The line is not locked and can be replaced

bit 1 **LTYPE:** Line Type bit
`1` = The line caches instruction words
`0` = The line caches data words

bit 0 **Unimplemented:** Write ‘`0`’; ignore read

12.2 Control Registers

TABLE 12-1: PORTA REGISTER MAP FOR PIC32MX534F064L, PIC32MX564F064L, PIC32MX564F128L, PIC32MX575F256L, PIC32MX575F512L, PIC32MX664F064L, PIC32MX664F128L, PIC32MX675F256L, PIC32MX675F512L, PIC32MX695F512L, PIC32MX764F128L, PIC32MX775F256L, PIC32MX775F512L AND PIC32MX795F512L DEVICES

Virtual Address (BF88_#)	Register Name(1)	Bit Range	Bits																All Resets
			31/15	30/14	29/13	28/12	27/11	26/10	25/9	24/8	23/7	22/6	21/5	20/4	19/3	18/2	17/1	16/0	
6000	TRISA	31:16	—	—	—	—	—	—	—	—	—	—	—	—	—	—	—	—	0000
		15:0	TRISA15	TRISA14	—	—	—	TRISA10	TRISA9	—	TRISA7	TRISA6	TRISA5	TRISA4	TRISA3	TRISA2	TRISA1	TRISA0	C6FF
6010	PORTA	31:16	—	—	—	—	—	—	—	—	—	—	—	—	—	—	—	—	0000
		15:0	RA15	RA14	—	—	—	RA10	RA9	—	RA7	RA6	RA5	RA4	RA3	RA2	RA1	RA0	xxxx
6020	LATA	31:16	—	—	—	—	—	—	—	—	—	—	—	—	—	—	—	—	0000
		15:0	LATA15	LATA14	—	—	—	LATA10	LATA9	—	LATA7	LATA6	LATA5	LATA4	LATA3	LATA2	LATA1	LATA0	xxxx
6030	ODCA	31:16	—	—	—	—	—	—	—	—	—	—	—	—	—	—	—	—	0000
		15:0	ODCA15	ODCA14	—	—	—	ODCA10	ODCA9	—	ODCA7	ODCA6	ODCA5	ODCA4	ODCA3	ODCA2	ODCA1	ODCA0	0000

Legend: x = unknown value on Reset; — = unimplemented, read as '0'. Reset values are shown in hexadecimal.

Note 1: All registers in this table have corresponding CLR, SET and INV registers at their virtual addresses, plus offsets of 0x4, 0x8 and 0xC, respectively. See **Section 12.1.1 "CLR, SET and INV Registers"** for more information.

TABLE 12-2: PORTB REGISTER MAP

Virtual Address (BF88_#)	Register Name(1)	Bit Range	Bits																All Resets
			31/15	30/14	29/13	28/12	27/11	26/10	25/9	24/8	23/7	22/6	21/5	20/4	19/3	18/2	17/1	16/0	
6040	TRISB	31:16	—	—	—	—	—	—	—	—	—	—	—	—	—	—	—	—	0000
		15:0	TRISB15	TRISB14	TRISB13	TRISB12	TRISB11	TRISB10	TRISB9	TRISB8	TRISB7	TRISB6	TRISB5	TRISB4	TRISB3	TRISB2	TRISB1	TRISB0	FFFF
6050	PORTB	31:16	—	—	—	—	—	—	—	—	—	—	—	—	—	—	—	—	0000
		15:0	RB15	RB14	RB13	RB12	RB11	RB10	RB9	RB8	RB7	RB6	RB5	RB4	RB3	RB2	RB1	RB0	xxxx
6060	LATB	31:16	—	—	—	—	—	—	—	—	—	—	—	—	—	—	—	—	0000
		15:0	LATB15	LATB14	LATB13	LATB12	LATB11	LATB10	LATB9	LATB8	LATB7	LATB6	LATB5	LATB4	LATB3	LATB2	LATB1	LATB0	xxxx
6070	ODCB	31:16	—	—	—	—	—	—	—	—	—	—	—	—	—	—	—	—	0000
		15:0	ODCB15	ODCB14	ODCB13	ODCB12	ODCB11	ODCB10	ODCB9	ODCB8	ODCB7	ODCB6	ODCB5	ODCB4	ODCB3	ODCB2	ODCB1	ODCB0	0000

Legend: x = unknown value on Reset; — = unimplemented, read as '0'. Reset values are shown in hexadecimal.

Note 1: All registers in this table have corresponding CLR, SET and INV registers at their virtual addresses, plus offsets of 0x4, 0x8 and 0xC, respectively. See **Section 12.1.1 "CLR, SET and INV Registers"** for more information.

© 2009-2016 Microchip Technology Inc.

FIGURE 23-2: ADC CONVERSION CLOCK PERIOD BLOCK DIAGRAM

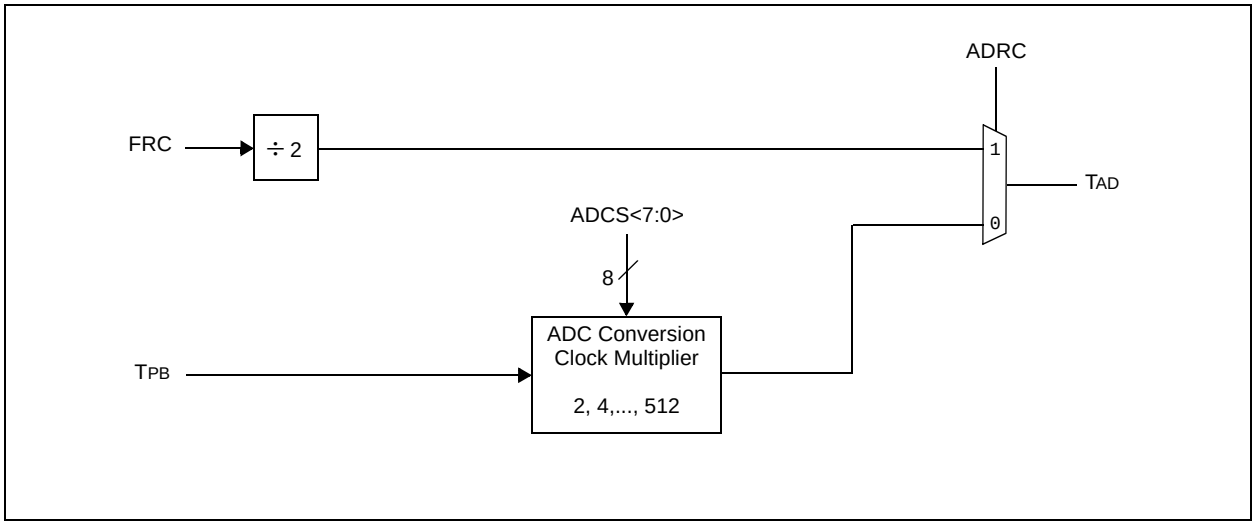

© 2009-2016 Microchip Technology Inc.

TABLE 24-1: CAN1 REGISTER SUMMARY FOR PIC32MX534F064H, PIC32MX564F064H, PIC32MX564F128H, PIC32MX575F256H, PIC32MX575F512H, PIC32MX764F128H, PIC32MX775F256H, PIC32MX775F512H, PIC32MX795F512H, PIC32MX534F064L, PIC32MX564F064L, PIC32MX564F128L, PIC32MX575F256L, PIC32MX575F512L, PIC32MX764F128L, PIC32MX775F256L, PIC32MX775F512L AND PIC32MX795F512L DEVICES (CONTINUED)

Virtual Address (BF88_#)	Register Name(1)	Bit Range	Bits																All Resets
			31/15	30/14	29/13	28/12	27/11	26/10	25/9	24/8	23/7	22/6	21/5	20/4	19/3	18/2	17/1	16/0	
B0F0	C1FLTCON3	31:16	FLTEN15	MSEL15<1:0>		FSEL15<4:0>					FLTEN14	MSEL14<1:0>		FSEL14<4:0>					0000
		15:0	FLTEN13	MSEL13<1:0>		FSEL13<4:0>					FLTEN12	MSEL12<1:0>		FSEL12<4:0>					0000
B100	C1FLTCON4	31:16	FLTEN19	MSEL19<1:0>		FSEL19<4:0>					FLTEN18	MSEL18<1:0>		FSEL18<4:0>					0000
		15:0	FLTEN17	MSEL17<1:0>		FSEL17<4:0>					FLTEN16	MSEL16<1:0>		FSEL16<4:0>					0000
B110	C1FLTCON5	31:16	FLTEN23	MSEL23<1:0>		FSEL23<4:0>					FLTEN22	MSEL22<1:0>		FSEL22<4:0>					0000
		15:0	FLTEN21	MSEL21<1:0>		FSEL21<4:0>					FLTEN20	MSEL20<1:0>		FSEL20<4:0>					0000
B120	C1FLTCON6	31:16	FLTEN27	MSEL27<1:0>		FSEL27<4:0>					FLTEN26	MSEL26<1:0>		FSEL26<4:0>					0000
		15:0	FLTEN25	MSEL25<1:0>		FSEL25<4:0>					FLTEN24	MSEL24<1:0>		FSEL24<4:0>					0000
B130	C1FLTCON7	31:16	FLTEN31	MSEL31<1:0>		FSEL31<4:0>					FLTEN30	MSEL30<1:0>		FSEL30<4:0>					0000
		15:0	FLTEN29	MSEL29<1:0>		FSEL29<4:0>					FLTEN28	MSEL28<1:0>		FSEL28<4:0>					0000
B140	C1RXFn (n = 0-31)	31:16	SID<10:0>											-—	EXID	—	EID<17:16>		xxxx
		15:0	EID<15:0>																xxxx
B340	C1FIFOBA	31:16	C1FIFOBA<31:0>																0000
		15:0																	0000
B350	C1FIFOCONn (n = 0-31)	31:16	—	—	—	—	—	—	—	—	—	—	—	FSIZE<4:0>					0000
		15:0	—	FRESET	UINC	DONLY	—	—	—	—	TXEN	TXABAT	TXLARB	TXERR	TXREQ	RTREN	TXPRI<1:0>		0000
B360	C1FIFOINTn (n = 0-31)	31:16	—	—	—	—	—	TXNFULLIE	TXHALFIE	TXEMPTYIE	—	—	—	—	RXOVFLIE	RXFULLIE	RXHALFIE	RXN EMPTYIE	0000
		15:0	—	—	—	—	—	TXNFULLIF	TXHALFIF	TXEMPTYIF	—	—	—	—	RXOVFLIF	RXFULLIF	RXHALFIF	RXN EMPTYIF	0000
B370	C1FIFOUAn (n = 0-31)	31:16	C1FIFOUA<31:0>																0000
		15:0																	0000
B380	C1FIFOCIn (n = 0-31)	31:16	—	—	—	—	—	—	—	—	—	—	—	—	—	—	—	—	0000
		15:0	—	—	—	—	—	—	—	—	—	—	—	C1FIFOCI<4:0>					0000

Legend: x = unknown value on Reset; — = unimplemented, read as '0'. Reset values are shown in hexadecimal.

Note 1: All registers in this table have corresponding CLR, SET and INV registers at their virtual addresses, plus offsets of 0x4, 0x8 and 0xC, respectively. See **Section 12.1.1 "CLR, SET and INV Registers"** for more information.

© 2009-2016 Microchip Technology Inc.

REGISTER 24-2: CiCFG: CAN BAUD RATE CONFIGURATION REGISTER

Bit Range	Bit 31/23/15/7	Bit 30/22/14/6	Bit 29/21/13/5	Bit 28/20/12/4	Bit 27/19/11/3	Bit 26/18/10/2	Bit 25/17/9/1	Bit 24/16/8/0
31:24	U-0	U-0	U-0	U-0	U-0	U-0	U-0	U-0
	—	—	—	—	—	—	—	—
23:16	U-0	R/W-0	U-0	U-0	U-0	R/W-0	R/W-0	R/W-0
	—	WAKFIL	—	—	—	SEG2PH<2:0>(1,4)		
15:8	R/W-0	R/W-0	R/W-0	R/W-0	R/W-0	R/W-0	R/W-0	R/W-0
	SEG2PHTS(1)	SAM(2)	SEG1PH<2:0>			PRSEG<2:0>		
7:0	R/W-0	R/W-0	R/W-0	R/W-0	R/W-0	R/W-0	R/W-0	R/W-0
	SJW<1:0>(3)		BRP<5:0>					

Legend:	HC = Hardware Clear	S = Settable bit	
R = Readable bit	W = Writable bit	U = Unimplemented bit, read as ‘0’	
-n = Value at POR	‘1’ = Bit is set	‘0’ = Bit is cleared	x = Bit is unknown

bit 31-23 **Unimplemented:** Read as ‘0’

bit 22 **WAKFIL:** CAN Bus Line Filter Enable bit
1 = Use CAN bus line filter for wake-up
0 = CAN bus line filter is not used for wake-up

bit 21-19 **Unimplemented:** Read as ‘0’

bit 18-16 **SEG2PH<2:0>:** Phase Buffer Segment 2 bits(1,4)
111 = Length is 8 x TQ
•
•
•
000 = Length is 1 x TQ

bit 15 **SEG2PHTS:** Phase Segment 2 Time Select bit(1)
1 = Freely programmable
0 = Maximum of SEG1PH or Information Processing Time, whichever is greater

bit 14 **SAM:** Sample of the CAN Bus Line bit(2)
1 = Bus line is sampled three times at the sample point
0 = Bus line is sampled once at the sample point

bit 13-11 **SEG1PH<2:0>:** Phase Buffer Segment 1 bits(4)
111 = Length is 8 x TQ
•
•
•
000 = Length is 1 x TQ

Note 1: SEG2PH ≤ SEG1PH. If SEG2PHTS is clear, SEG2PH will be set automatically.
2: 3 Time bit sampling is not allowed for BRP < 2.
3: SJW ≤ SEG2PH.
4: The Time Quanta per bit must be greater than 7 (that is, TQBIT > 7).

Note: This register can only be modified when the CAN module is in Configuration mode (OPMOD<2:0> (CiCON<23:21>) = 100).

© 2009-2016 Microchip Technology Inc.

REGISTER 24-16: CiFLTCON6: CAN FILTER CONTROL REGISTER 6 (CONTINUED)

bit 15 **FLTEN25:** Filter 25 Enable bit

1 = Filter is enabled
0 = Filter is disabled

bit 14-13 **MSEL25<1:0>:** Filter 25 Mask Select bits

11 = Acceptance Mask 3 selected
10 = Acceptance Mask 2 selected
01 = Acceptance Mask 1 selected
00 = Acceptance Mask 0 selected

bit 12-8 **FSEL25<4:0>:** FIFO Selection bits

11111 = Message matching filter is stored in FIFO buffer 31
11110 = Message matching filter is stored in FIFO buffer 30
•
•
•
00001 = Message matching filter is stored in FIFO buffer 1
00000 = Message matching filter is stored in FIFO buffer 0

bit 7 **FLTEN24:** Filter 24 Enable bit

1 = Filter is enabled
0 = Filter is disabled

bit 6-5 **MSEL24<1:0>:** Filter 24 Mask Select bits

11 = Acceptance Mask 3 selected
10 = Acceptance Mask 2 selected
01 = Acceptance Mask 1 selected
00 = Acceptance Mask 0 selected

bit 4-0 **FSEL24<4:0>:** FIFO Selection bits

11111 = Message matching filter is stored in FIFO buffer 31
11110 = Message matching filter is stored in FIFO buffer 30
•
•
•
00001 = Message matching filter is stored in FIFO buffer 1
00000 = Message matching filter is stored in FIFO buffer 0

Note: The bits in this register can only be modified if the corresponding filter enable (FLTENn) bit is '0'.

REGISTER 25-33: EMAC1MADR: ETHERNET CONTROLLER MAC MII MANAGEMENT ADDRESS REGISTER

Bit Range	Bit 31/23/15/7	Bit 30/22/14/6	Bit 29/21/13/5	Bit 28/20/12/4	Bit 27/19/11/3	Bit 26/18/10/2	Bit 25/17/9/1	Bit 24/16/8/0
31:24	U-0	U-0	U-0	U-0	U-0	U-0	U-0	U-0
	—	—	—	—	—	—	—	—
23:16	U-0	U-0	U-0	U-0	U-0	U-0	U-0	U-0
	—	—	—	—	—	—	—	—
15:8	U-0	U-0	U-0	R/W-0	R/W-0	R/W-0	R/W-0	R/W-1
	—	—	—	PHYADDR<4:0>				
7:0	U-0	U-0	U-0	R/W-0	R/W-0	R/W-0	R/W-0	R/W-0
	—	—	—	REGADDR<4:0>				

Legend:			
R = Readable bit	W = Writable bit	U = Unimplemented bit, read as ‘0’	
-n = Value at POR	‘1’ = Bit is set	‘0’ = Bit is cleared	x = Bit is unknown

bit 31-13 **Unimplemented:** Read as ’0’

bit 12-8 **PHYADDR<4:0>:** MII Management PHY Address bits

This field represents the 5-bit PHY Address field of Management cycles. Up to 31 PHYs can be addressed (0 is reserved).

bit 7-5 **Unimplemented:** Read as ’0’

bit 4-0 **REGADDR<4:0>:** MII Management Register Address bits

This field represents the 5-bit Register Address field of Management cycles. Up to 32 registers can be accessed.

Note: Both 16-bit and 32-bit accesses are allowed to these registers (including the SET, CLR and INV registers). 8-bit accesses are not allowed and are ignored by the hardware.

NOTES:

© 2009-2016 Microchip Technology Inc.

TABLE 32-5: DC CHARACTERISTICS: OPERATING CURRENT (IDD) (CONTINUED)

DC CHARACTERISTICS			Standard Operating Conditions: 2.3V to 3.6V (unless otherwise stated) Operating temperature -40°C ≤ TA ≤ +85°C for Industrial -40°C ≤ TA ≤ +105°C for V-Temp				
Param. No.	**Typical(3)**	**Max.**	**Units**	**Conditions**			
Operating Current (IDD)(1,2) for PIC32MX534/564/664/764 Family Devices							
DC20c	6	9	mA	Code executing from Flash	-40ºC, +25ºC, +85ºC	—	4 MHz
DC20d	7	10			+105ºC		
DC20e	2	—		Code executing from SRAM	—		
DC21b	19	32	mA	Code executing from Flash	—	—	25 MHz **(Note 4)**
DC21c	14	—		Code executing from SRAM			
DC22b	31	50	mA	Code executing from Flash	—	—	60 MHz **(Note 4)**
DC22c	29	—		Code executing from SRAM			
DC23c	39	65	mA	Code executing from Flash	-40ºC, +25ºC, +85ºC	—	80 MHz
DC23d	49	70			+105ºC		
DC23e	39	—		Code executing from SRAM	—		
DC25b	100	150	µA	—	+25°C	3.3V	LPRC (31 kHz) **(Note 4)**

Note 1: A device's IDD supply current is mainly a function of the operating voltage and frequency. Other factors, such as PBCLK (Peripheral Bus Clock) frequency, number of peripheral modules enabled, internal code execution pattern, execution from Program Flash memory vs. SRAM, I/O pin loading and switching rate, oscillator type, as well as temperature, can have an impact on the current consumption.

2: The test conditions for IDD measurements are as follows:

- Oscillator mode is EC (for 8 MHz and below) and EC+PLL (for above 8 MHz) with OSC1 driven by external square wave from rail-to-rail, (OSC1 input clock input over/undershoot < 100 mV required)
- OSC2/CLKO is configured as an I/O input pin
- USB PLL oscillator is disabled if the USB module is implemented, PBCLK divisor = 1:8
- CPU, program Flash, and SRAM data memory are operational, program Flash memory Wait states = `111`, Program Cache and Prefetch are disabled and SRAM data memory Wait states = `1`
- No peripheral modules are operating, (ON bit = `0`)
- WDT, Clock Switching, Fail-Safe Clock Monitor, and Secondary Oscillator are disabled
- All I/O pins are configured as inputs and pulled to VSS
- $\overline{MCLR}$ = VDD
- CPU executing `while(1)` statement from Flash
- RTCC and JTAG are disabled

3: Data in "Typical" column is at 3.3V, 25°C at specified operating frequency unless otherwise stated. Parameters are for design guidance only and are not tested.

4: All parameters are characterized, but only those parameters listed for 4 MHz and 80 MHz are tested at 3.3V in manufacturing.

TABLE 32-7: DC CHARACTERISTICS: POWER-DOWN CURRENT (I_{PD}) (CONTINUED)

DC CHARACTERISTICS			Standard Operating Conditions: 2.3V to 3.6V (unless otherwise stated) Operating temperature -40°C ≤ TA ≤ +85°C for Industrial -40°C ≤ TA ≤ +105°C for V-Temp			
Param. No.	**Typical(2)**	**Max.**	**Units**	**Conditions**		
Power-Down Current (I_{PD})(1) for PIC32MX534/564/664/764 Family Devices						
DC40g	12	40	μA	-40°C	2.3V	Base Power-Down Current **(Note 6)**
DC40h	20	120		+25°C		
DC40i	210	600		+85°C		
DC40o	400	1000		+105°C		
DC40j	20	120		+25°C	3.3V	Base Power-Down Current
DC40k	15	80		-40°C	3.6V	Base Power-Down Current
DC40l	20	120		+25°C		
DC40m	113	350(5)		+70°C		
DC40n	220	650		+85°C		
DC40p	500	1000		+105°C		
Module Differential Current for PIC32MX534/564/664/764 Family Devices						
DC41c	—	10	μA	—	2.5V	Watchdog Timer Current: ΔI_{WDT} **(Notes 3,6)**
DC41d	5	—			3.3V	Watchdog Timer Current: ΔI_{WDT} **(Note 3)**
DC41e	—	20			3.6V	Watchdog Timer Current: ΔI_{WDT} **(Note 3)**
DC42c	—	40	μA	—	2.5V	RTCC + Timer1 w/32 kHz Crystal: ΔI_{RTCC} **(Notes 3,6)**
DC42d	23	—			3.3V	RTCC + Timer1 w/32 kHz Crystal: ΔI_{RTCC} **(Note 3)**
DC42e	—	50			3.6V	RTCC + Timer1 w/32 kHz Crystal: ΔI_{RTCC} **(Note 3)**
DC43c	—	1300	μA	—	2.5V	ADC: ΔI_{ADC} **(Notes 3,4,6)**
DC43d	1100	—			3.3V	ADC: ΔI_{ADC} **(Notes 3,4)**
DC43e	—	1300			3.6V	ADC: ΔI_{ADC} **(Notes 3,4)**

Note 1: The test conditions for I_{PD} current measurements are as follows:

- Oscillator mode is EC (for 8 MHz and below) and EC+PLL (for above 8 MHz) with OSC1 driven by external square wave from rail-to-rail, (OSC1 input clock input over/undershoot < 100 mV required)
- OSC2/CLKO is configured as an I/O input pin
- USB PLL oscillator is disabled if the USB module is implemented, PBCLK divisor = 1:8
- CPU is in Sleep mode, program Flash memory Wait states = 111, Program Cache and Prefetch are disabled and SRAM data memory Wait states = 1
- No peripheral modules are operating, (ON bit = 0)
- WDT, Clock Switching, Fail-Safe Clock Monitor, and Secondary Oscillator are disabled
- All I/O pins are configured as inputs and pulled to V_{SS}
- $\overline{MCLR}$ = V_{DD}
- RTCC and JTAG are disabled

2: Data in the “Typical” column is at 3.3V, 25°C unless otherwise stated. Parameters are for design guidance only and are not tested.

3: The Δ current is the additional current consumed when the module is enabled. This current should be added to the base I_{PD} current.

4: Test conditions for ADC module differential current are as follows: Internal ADC RC oscillator enabled.

5: Data is characterized at +70°C and not tested. Parameter is for design guidance only.

6: This parameter is characterized, but not tested in manufacturing.

32.2 AC Characteristics and Timing Parameters

The information contained in this section defines PIC32MX5XX/6XX/7XX AC characteristics and timing parameters.

FIGURE 32-1: LOAD CONDITIONS FOR DEVICE TIMING SPECIFICATIONS

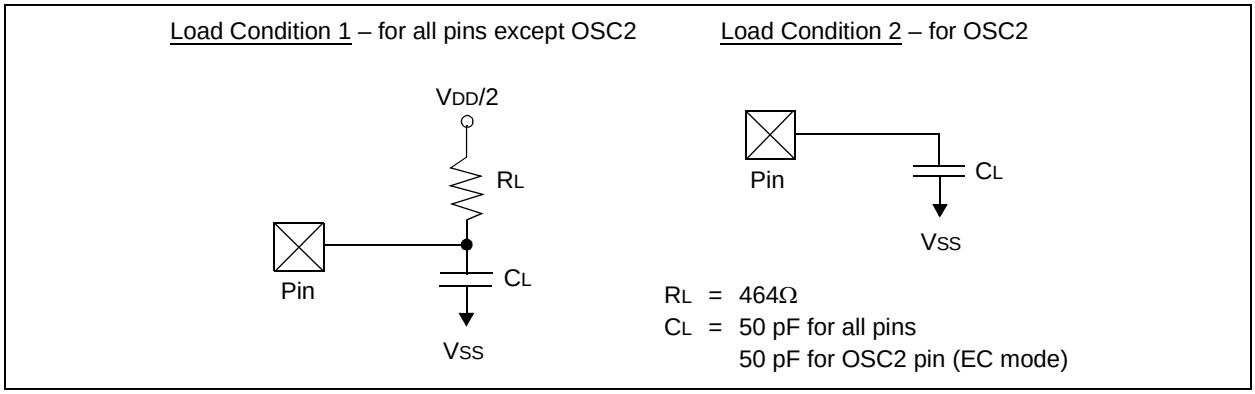

TABLE 32-16: CAPACITIVE LOADING REQUIREMENTS ON OUTPUT PINS

AC CHARACTERISTICS			Standard Operating Conditions: 2.3V to 3.6V (unless otherwise stated) Operating temperature -40°C ≤ TA ≤ +85°C for Industrial -40°C ≤ TA ≤ +105°C for V-Temp				
Param. No.	**Symbol**	**Characteristics**	**Min.**	**Typical(1)**	**Max.**	**Units**	**Conditions**
DO50	Cosco	OSC2 pin	—	—	15	pF	In XT and HS modes when an external crystal is used to drive OSC1
DO56	CIO	All I/O pins and OSC2	—	—	50	pF	In EC mode
DO58	CB	SCLx, SDAx	—	—	400	pF	In I^2C mode

Note 1: Data in “Typical” column is at 3.3V, 25°C unless otherwise stated. Parameters are for design guidance only and are not tested.

FIGURE 32-2: EXTERNAL CLOCK TIMING

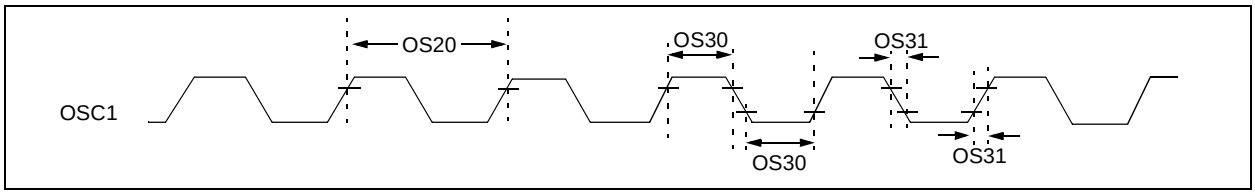

© 2009-2016 Microchip Technology Inc.

FIGURE 32-10: SPIx MODULE MASTER MODE (CKE = 0) TIMING CHARACTERISTICS

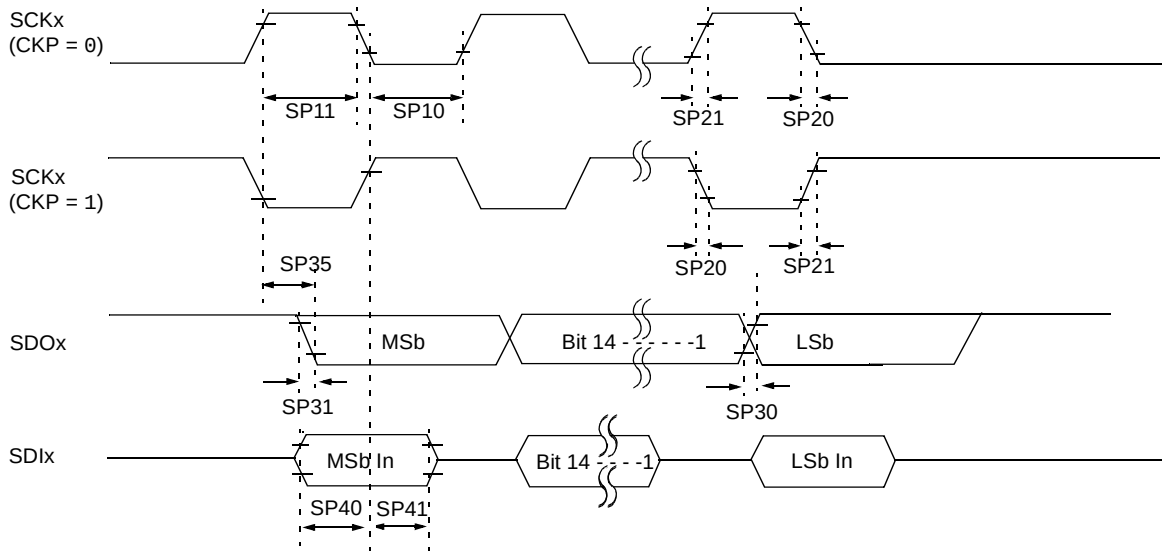

Note: Refer to Figure 32-1 for load conditions.

TABLE 32-28: SPIx MASTER MODE (CKE = 0) TIMING REQUIREMENTS

AC CHARACTERISTICS			Standard Operating Conditions: 2.3V to 3.6V (unless otherwise stated) Operating temperature -40°C ≤ TA ≤ +85°C for Industrial -40°C ≤ TA ≤ +105°C for V-Temp				
Param. No.	**Symbol**	**Characteristics(1)**	**Min.**	**Typical(2)**	**Max.**	**Units**	**Conditions**
SP10	TscL	SCKx Output Low Time(3)	Tsck/2	—	—	ns	—
SP11	TscH	SCKx Output High Time(3)	Tsck/2	—	—	ns	—
SP20	TscF	SCKx Output Fall Time(4)	—	—	—	ns	See parameter DO32
SP21	TscR	SCKx Output Rise Time(4)	—	—	—	ns	See parameter DO31
SP30	TdoF	SDOx Data Output Fall Time(4)	—	—	—	ns	See parameter DO32
SP31	TdoR	SDOx Data Output Rise Time(4)	—	—	—	ns	See parameter DO31
SP35	TscH2doV, TscL2doV	SDOx Data Output Valid after SCKx Edge	—	—	15	ns	VDD > 2.7V
			—	—	20	ns	VDD < 2.7V
SP40	TdiV2scH, TdiV2scL	Setup Time of SDIx Data Input to SCKx Edge	10	—	—	ns	—
SP41	TscH2diL, TscL2diL	Hold Time of SDIx Data Input to SCKx Edge	10	—	—	ns	—

Note 1: These parameters are characterized, but not tested in manufacturing.

2: Data in “Typical” column is at 3.3V, 25°C unless otherwise stated. Parameters are for design guidance only and are not tested.

3: The minimum clock period for SCKx is 40 ns. Therefore, the clock generated in Master mode must not violate this specification.

4: Assumes 50 pF load on all SPIx pins.

© 2009-2016 Microchip Technology Inc.

TABLE 32-36: ADC MODULE SPECIFICATIONS (CONTINUED)

AC CHARACTERISTICS			Standard Operating Conditions (see Note 5): 2.5V to 3.6V (unless otherwise stated) Operating temperature -40°C ≤ TA ≤ +85°C for Industrial -40°C ≤ TA ≤ +105°C for V-Temp				
Param. No.	**Symbol**	**Characteristics**	**Min.**	**Typical**	**Max.**	**Units**	**Conditions**
ADC Accuracy – Measurements with Internal VREF+/VREF-							
AD20d	Nr	Resolution	10 data bits			bits	**(Note 3)**
AD21d	INL	Integral Nonlinearity	> -1	—	< 1	LSb	VINL = AVSS = 0V, AVDD = 2.5V to 3.6V **(Note 3)**
AD22d	DNL	Differential Nonlinearity	> -1	—	< 1	LSb	VINL = AVSS = 0V, AVDD = 2.5V to 3.6V **(Notes 2,3)**
AD23d	GERR	Gain Error	> -4	—	< 4	LSb	VINL = AVSS = 0V, AVDD = 2.5V to 3.6V **(Note 3)**
AD24d	EOFF	Offset Error	> -2	—	< 2	LSb	VINL = AVSS = 0V, AVDD = 2.5V to 3.6V **(Note 3)**
AD25d	—	Monotonicity	—	—	—	—	Guaranteed
Dynamic Performance							
AD31b	SINAD	Signal to Noise and Distortion	55	58.5	—	dB	**(Notes 3,4)**
AD34b	ENOB	Effective Number of Bits	9.0	9.5	—	bits	**(Notes 3,4)**

Note 1: These parameters are not characterized or tested in manufacturing.

2: With no missing codes.

3: These parameters are characterized, but not tested in manufacturing.

4: Characterized with a 1 kHz sine wave.

5: The ADC module is functional at VBORMIN < VDD < 2.5V, but with degraded performance. Unless otherwise stated, module functionality is tested, but not characterized.

FIGURE 32-27: PARALLEL MASTER PORT WRITE TIMING DIAGRAM

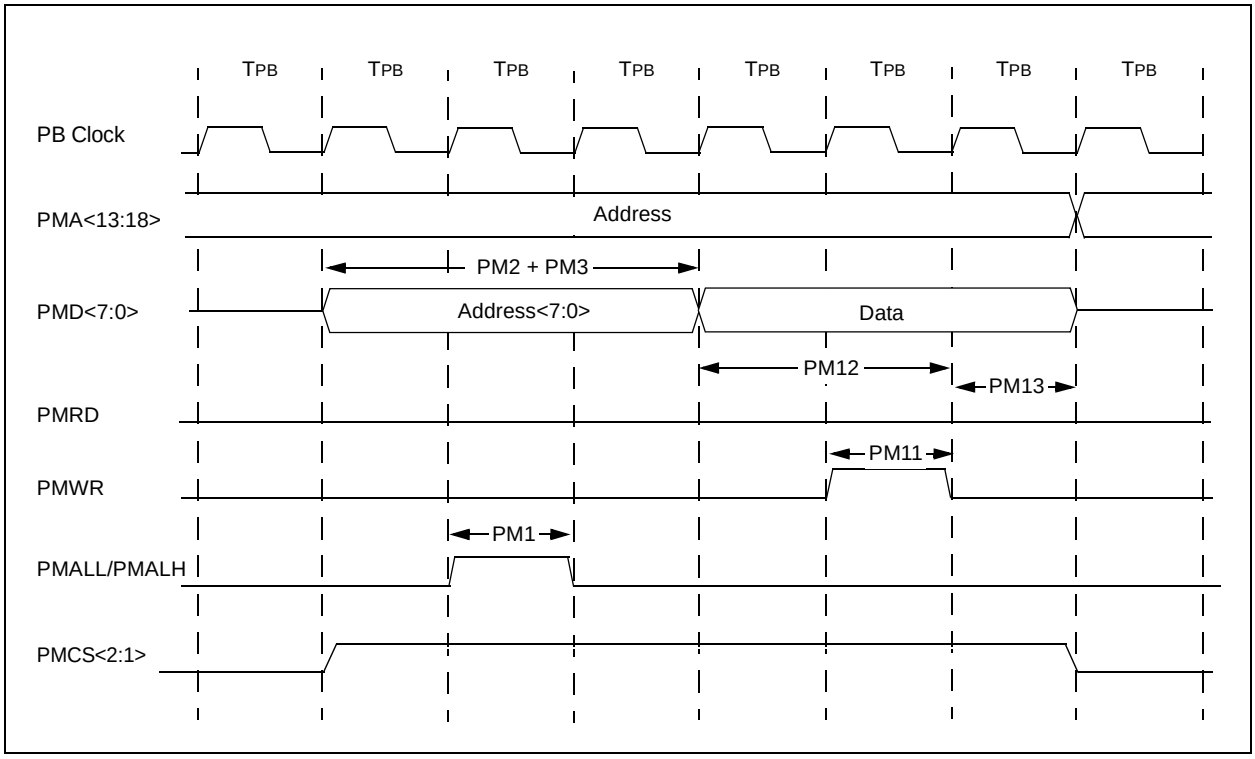

TABLE 32-41: PARALLEL MASTER PORT WRITE TIMING REQUIREMENTS

AC CHARACTERISTICS			Standard Operating Conditions: 2.3V to 3.6V (unless otherwise stated) Operating temperature -40°C ≤ TA ≤ +85°C for Industrial -40°C ≤ TA ≤ +105°C for V-Temp				
Param. No.	**Symbol**	**Characteristics(1)**	**Min.**	**Typical**	**Max.**	**Units**	**Conditions**
PM11	TWR	PMWR Pulse Width	—	1 TPB	—	—	—
PM12	TDVSU	Data Out Valid before PMWR or PMENB goes Inactive (data setup time)	—	2 TPB	—	—	—
PM13	TDVHOLD	PMWR or PMEMB Invalid to Data Out Invalid (data hold time)	—	1 TPB	—	—	—

Note 1: These parameters are characterized, but not tested in manufacturing.

© 2009-2016 Microchip Technology Inc.

34.0 PACKAGING INFORMATION

34.1 Package Marking Information

64-Lead TQFP (10x10x1 mm)

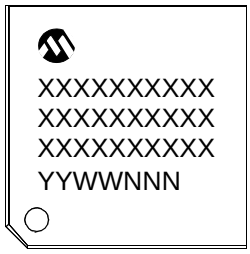

Example

100-Lead TQFP (14x14x1 mm)

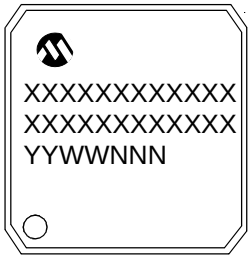

Example

100-Lead TQFP (12x12x1 mm)

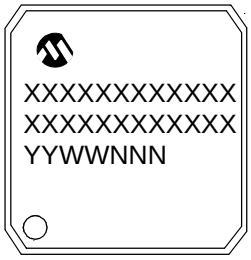

Example

Legend:	XX...X	Customer-specific information
	Y	Year code (last digit of calendar year)
	YY	Year code (last 2 digits of calendar year)
	WW	Week code (week of January 1 is week ‘01’)
	NNN	Alphanumeric traceability code
		Pb-free JEDEC designator for Matte Tin (Sn)
	*	This package is Pb-free. The Pb-free JEDEC designator (e3) can be found on the outer packaging for this package.
Note:	In the event the full Microchip part number cannot be marked on one line, it will be carried over to the next line, thus limiting the number of available characters for customer-specific information.	

124-Very Thin Leadless Array Package (TL) – 9x9x0.9 mm Body [VTLA]

Note: For the most current package drawings, please see the Microchip Packaging Specification located at http://www.microchip.com/packaging

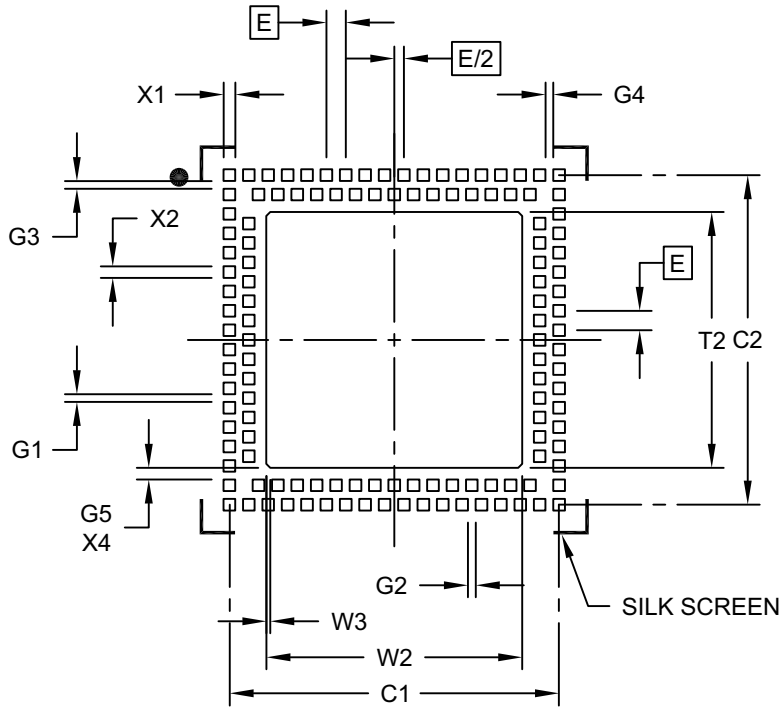

RECOMMENDED LAND PATTERN

Units		MILLIMETERS		
Dimension Limits		MIN	NOM	MAX
Contact Pitch	E	0.50 BSC		
Pad Clearance	G1	0.20		
Pad Clearance	G2	0.20		
Pad Clearance	G3	0.20		
Pad Clearance	G4	0.20		
Contact to Center Pad Clearance (X4)	G5	0.30		
Optional Center Pad Width	T2			6.60
Optional Center Pad Length	W2			6.60
Optional Center Pad Chamfer (X4)	W3		0.10	
Contact Pad Spacing	C1		8.50	
Contact Pad Spacing	C2		8.50	
Contact Pad Width (X124)	X1			0.30
Contact Pad Length (X124)	X2			0.30

Notes:

1. Dimensioning and tolerancing per ASME Y14.5M

   BSC: Basic Dimension. Theoretically exact value shown without tolerances.

Microchip Technology Drawing No. C04-2193A

© 2009-2016 Microchip Technology Inc.

TABLE B-4: SECTION UPDATES (CONTINUED)

Section Name	Update Description
7.0 “Interrupt Controller”	• Updated the following Interrupt Sources in Table 7-1: - Changed IC2AM – I2C4 Master Event to: IC4M – I2C4 Master Event - Changed IC3AM – I2C5 Master Event to: IC5M – I2C4 Master Event - Changed U1E – UART1A Error to: U1E – UART1 Error - Changed U4E – UART1B Error to: U4E – UART4 Error - Changed U1RX – UART1A Receiver to: U1RX – UART1 Receiver - Changed U4RX – UART1B Receiver to: U4RX – UART4 Receiver - Changed U1TX – UART1A Transmitter to: U1TX – UART1 Transmitter - Changed U4TX – UART1B Transmitter to: U4TX – UART4 Transmitter - Changed U6E – UART2B Error to: U6E – UART6 Error - Changed U6RX – UART2B Receiver to: U6RX – UART6 Receiver - Changed U6TX – UART2B Transmitter to: U6TX – UART6 Transmitter - Changed U5E – UART3B Error to: U5E – UART5 Error - Changed U5RX – UART3B Receiver to: U5RX – UART5 Receiver - Changed U5TX – UART3B Transmitter to: U5TX – UART5 Transmitter
1.0 “Oscillator Configuration”	Updated Figure 1-1
1.0 “Output Compare”	Updated Figure 1-1
1.0 “Ethernet Controller”	Added a note on using the Ethernet controller pins (see note above Table 1-3)
1.0 “Comparator Voltage Reference (CVREF)”	Updated the note in Figure 1-1
1.0 “Special Features”	Updated the bit description for bit 10 in Register 1-2 Added notes 1 and 2 to Register 1-4
1.0 “Electrical Characteristics”	Updated the Absolute Maximum Ratings: • Voltage on any 5V tolerant pin with respect to VSS when VDD < 2.3V - 0.3V to +3.6V was updated • Voltage on VBUS with respect to VSS - 0.3V to +5.5V was added Updated the maximum value of DC16 as 2.1 in Table 1-4 Updated the Typical values for the following parameters: DC20b, DC20c, DC21c, DC22c and DC23c (see Table 1-5) Updated Table 1-11: • Removed the following DC Characteristics: Programming temperature 0°C ≤ TA ≤ +70°C (25°C recommended) • Updated the Minimum value for the Parameter number D131 as 2.3 • Removed the Conditions for the following Parameter numbers: D130, D131, D132, D135, D136 and D137 • Updated the condition for the parameter number D130a and D132a Updated the Minimum, Typical and Maximum values for parameter D305 in Table 1-13 Added note 2 to Table 1-18 Updated the Minimum and Maximum values for parameter F20b (see Table 1-19) Updated the following figures: • Figure 1-4 • Figure 1-9 • Figure 1-22 • Figure 1-23
Appendix A: “Migrating from PIC32MX3XX/4XX to PIC32MX5XX/6XX/7XX Devices”	Removed the A.3 Pin Assignments sub-section.

© 2009-2016 Microchip Technology Inc.