Welcome to E-XFL.COM

What is "Embedded - Microcontrollers"?

"Embedded - Microcontrollers" refer to small, integrated circuits designed to perform specific tasks within larger systems. These microcontrollers are essentially compact computers on a single chip, containing a processor core, memory, and programmable input/output peripherals. They are called "embedded" because they are embedded within electronic devices to control various functions, rather than serving as standalone computers. Microcontrollers are crucial in modern electronics, providing the intelligence and control needed for a wide range of applications.

Applications of "Embedded - Microcontrollers"

Details	
Product Status	Active
Core Processor	AVR
Core Size	8/16-Bit
Speed	32MHz
Connectivity	I²C, IrDA, SPI, UART/USART, USB
Peripherals	Brown-out Detect/Reset, DMA, POR, PWM, WDT
Number of I/O	34
Program Memory Size	64KB (32K x 16)
Program Memory Type	FLASH
EEPROM Size	2K x 8
RAM Size	4K x 8
Voltage - Supply (Vcc/Vdd)	1.6V ~ 3.6V
Data Converters	A/D 12x12b; D/A 2x12b
Oscillator Type	Internal
Operating Temperature	-40°C ~ 85°C (TA)
Mounting Type	Surface Mount
Package / Case	44-TQFP
Supplier Device Package	44-TQFP (10x10)
Purchase URL	https://www.e-xfl.com/product-detail/microchip-technology/atxmega64a4u-au

Figure 2-2. BGA pinout

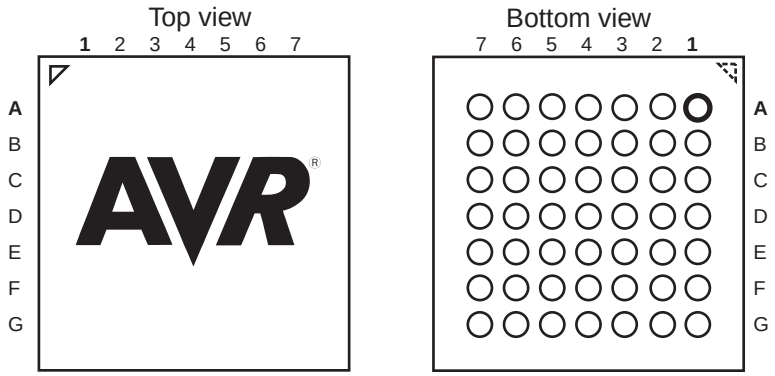

Table 2-1. BGA pinout

	1	2	3	4	5	6	7
A	PA3	AVCC	GND	PR1	PR0	PDI_DATA	PE3
B	PA4	PA1	PA0	GND	RESET/ PDI_CLK	PE2	VCC
C	PA5	PA2	PA6	PA7	GND	PE1	GND
D	PB1	PB2	PB3	PB0	GND	PD7	PE0
E	GND	GND	PC3	GND	PD4	PD5	PD6
F	VCC	PC0	PC4	PC6	PD0	PD1	PD3
G	PC1	PC2	PC5	PC7	GND	VCC	PD2

Figure 10-1. The clock system, clock sources and clock distribution.

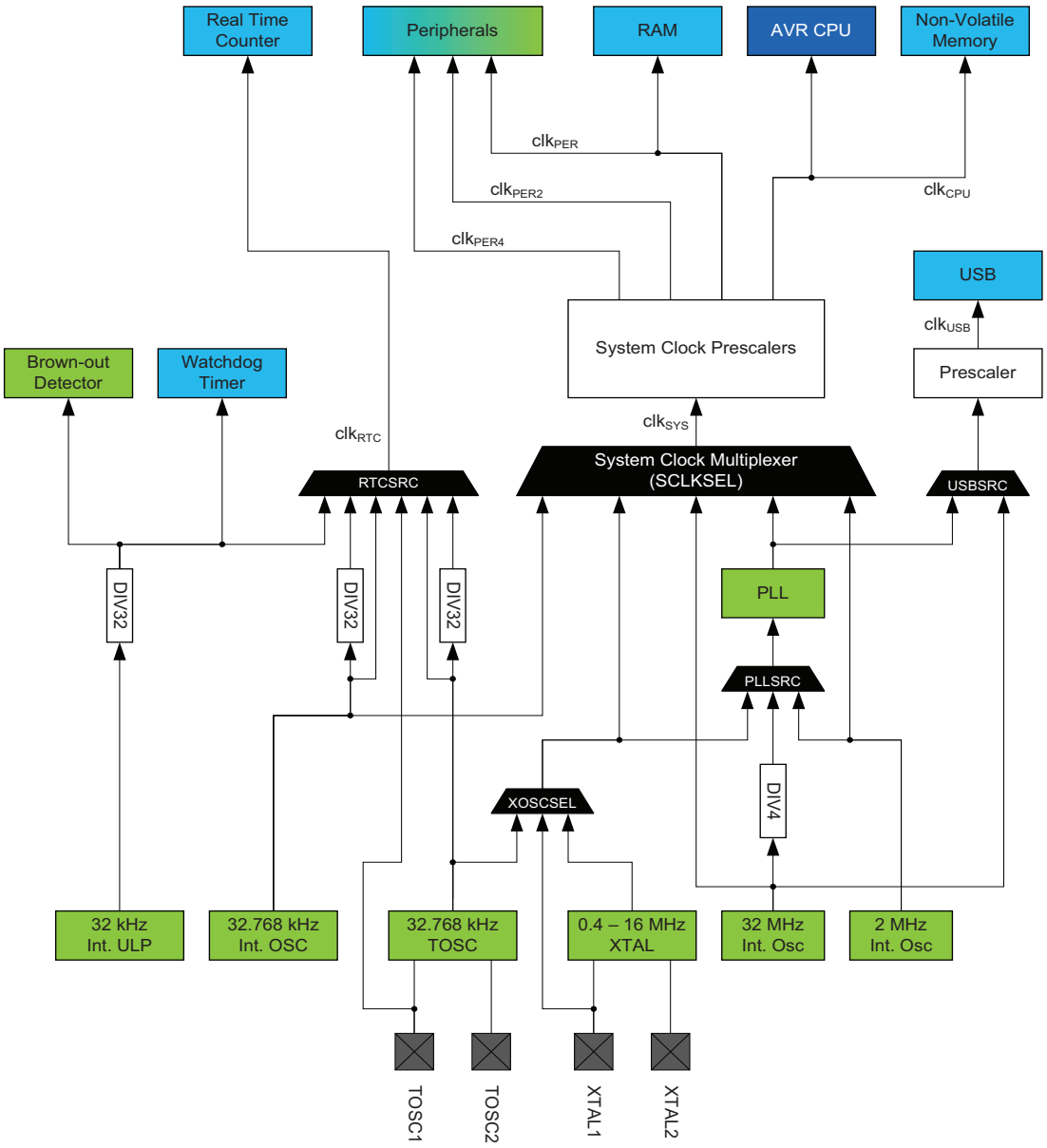

10.3 Clock Sources

The clock sources are divided in two main groups: internal oscillators and external clock sources. Most of the clock sources can be directly enabled and disabled from software, while others are automatically enabled or disabled, depending on peripheral settings. After reset, the device starts up running from the 2MHz internal oscillator. The other clock sources, DFLLs and PLL, are turned off by default.

The internal oscillators do not require any external components to run. For details on characteristics and accuracy of the internal oscillators, refer to the device datasheet.

10.3.1 32kHz Ultra Low Power Internal Oscillator

This oscillator provides an approximate 32kHz clock. The 32kHz ultra low power (ULP) internal oscillator is a very low power clock source, and it is not designed for high accuracy. The oscillator employs a built-in prescaler that provides

Figure 15-4. I/O configuration - Totem-pole with bus-keeper.

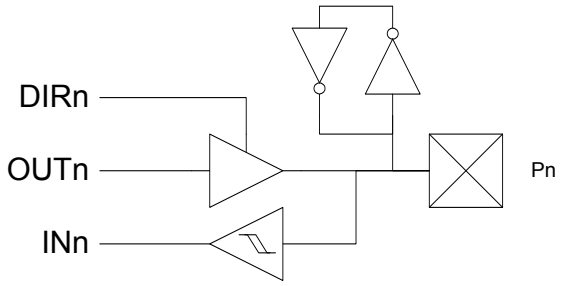

15.3.5 Others

Figure 15-5. Output configuration - Wired-OR with optional pull-down.

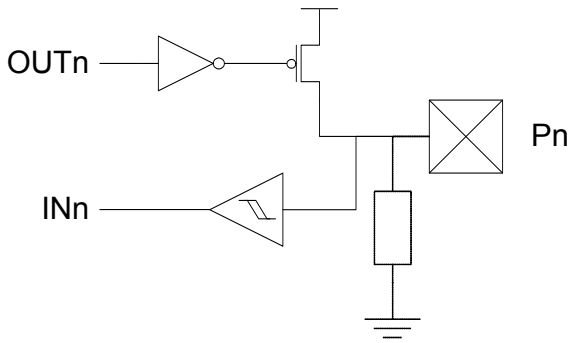

Figure 15-6. I/O configuration - Wired-AND with optional pull-up.

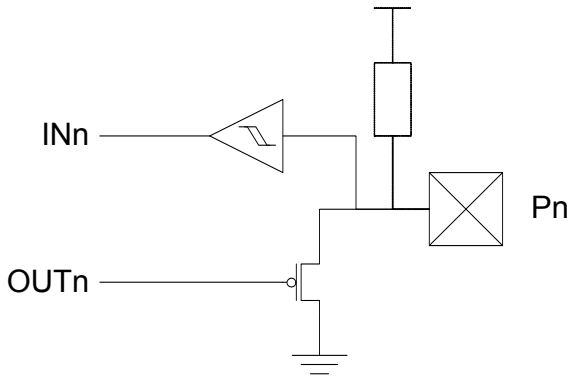

Figure 30-1. Analog comparator overview.

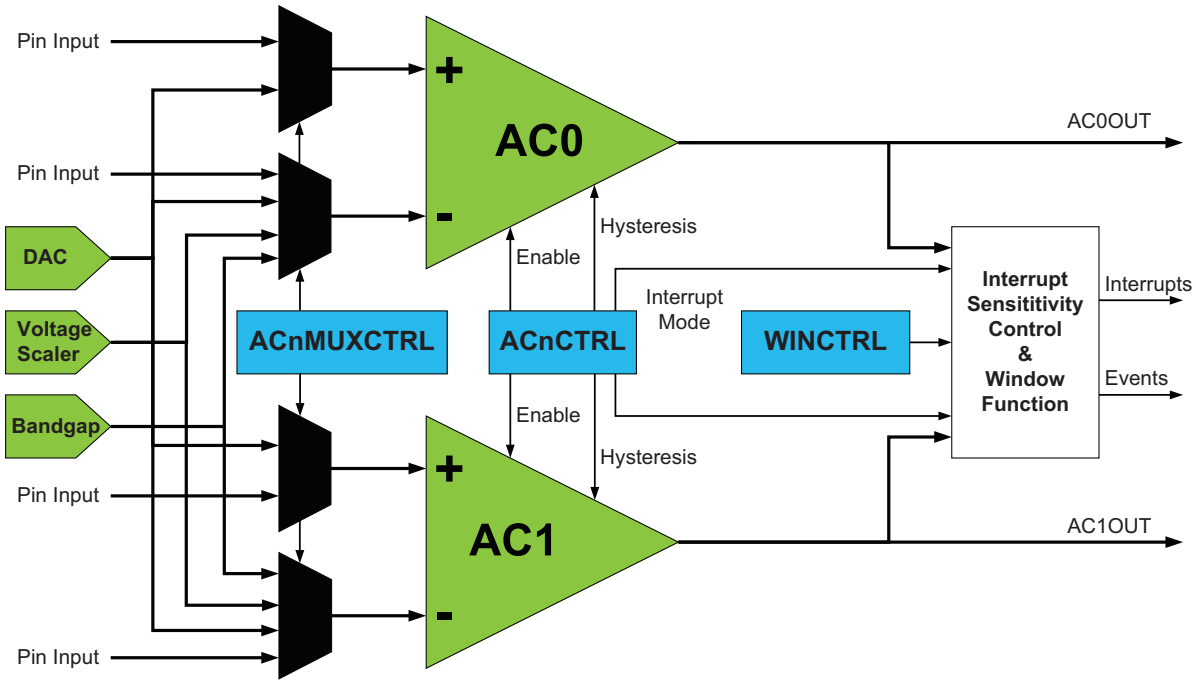

The window function is realized by connecting the external inputs of the two analog comparators in a pair as shown in Figure 30-2.

Figure 30-2. Analog comparator window function.

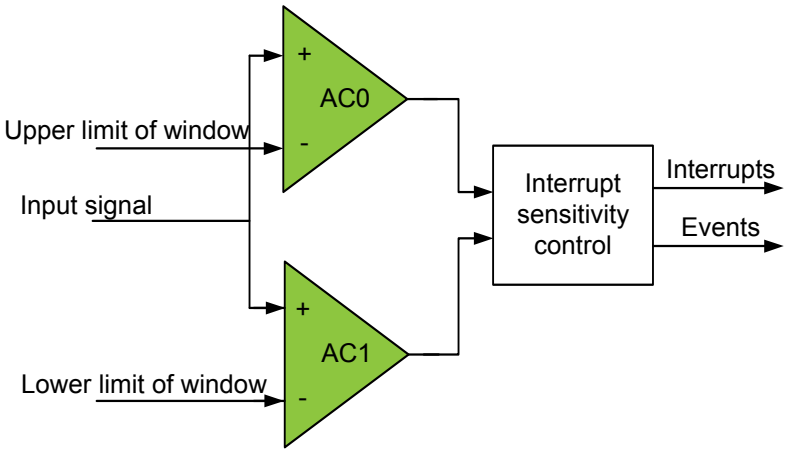

Table 36-28. External clock with prescaler [1] for system clock.

Symbol	Parameter	Condition	Min.	Typ.	Max.	Units
$1/t_{CK}$	Clock Frequency [2]	V_{CC} = 1.6 - 1.8V	0		90	MHz
		V_{CC} = 2.7 - 3.6V	0		142	
t_{CK}	Clock Period	V_{CC} = 1.6 - 1.8V	11			ns
		V_{CC} = 2.7 - 3.6V	7			
t_{CH}	Clock High Time	V_{CC} = 1.6 - 1.8V	4.5			ns
		V_{CC} = 2.7 - 3.6V	2.4			
t_{CL}	Clock Low Time	V_{CC} = 1.6 - 1.8V	4.5			ns
		V_{CC} = 2.7 - 3.6V	2.4			
t_{CR}	Rise Time (for maximum frequency)	V_{CC} = 1.6 - 1.8V			1.5	ns
		V_{CC} = 2.7 - 3.6V			1.0	
t_{CF}	Fall Time (for maximum frequency)	V_{CC} = 1.6 - 1.8V			1.5	ns
		V_{CC} = 2.7 - 3.6V			1.0	
Δt_{CK}	Change in period from one clock cycle to the next				10	%

Notes:
1. System Clock Prescalers must be set so that maximum CPU clock frequency for device is not exceeded.
2. The maximum frequency vs. supply voltage is linear between 1.6V and 2.7V, and the same applies for all other parameters with supply voltage conditions.

36.1.14.7 External 16MHz crystal oscillator and XOSC characteristic

Table 36-29. External 16MHz crystal oscillator and XOSC characteristics.

Symbol	Parameter	Condition		Min.	Typ.	Max.	Units
	Cycle to cycle jitter	XOSCPWR=0	FRQRANGE=0		<10		ns
			FRQRANGE=1, 2, or 3		<1.0		
		XOSCPWR=1			<1.0		
	Long term jitter	XOSCPWR=0	FRQRANGE=0		<6.0		ns
			FRQRANGE=1, 2, or 3		<0.5		
		XOSCPWR=1			<0.5		
	Frequency error	XOSCPWR=0	FRQRANGE=0		<0.1		%
			FRQRANGE=1		<0.05		
			FRQRANGE=2 or 3		<0.005		
		XOSCPWR=1			<0.005		

36.1.15 SPI Characteristics

Figure 36-5. SPI timing requirements in master mode.

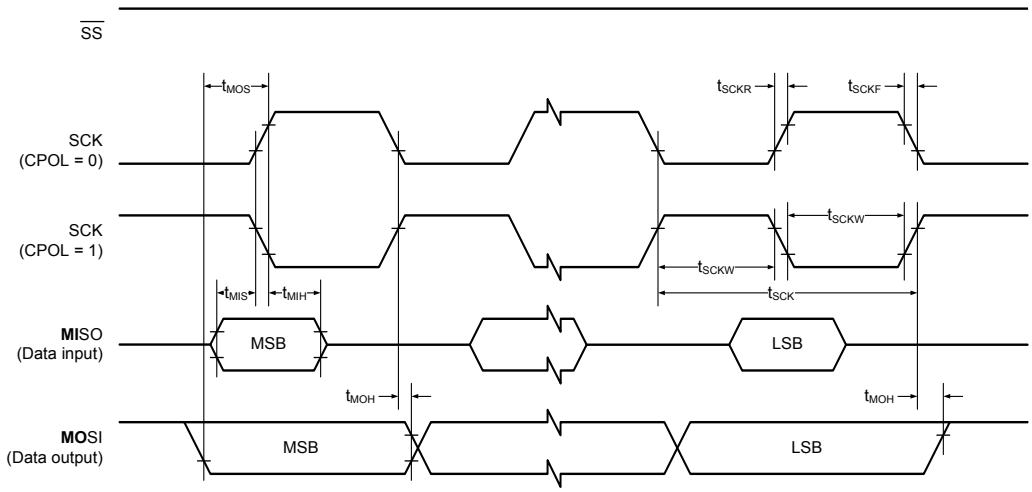

Figure 36-6. SPI timing requirements in slave mode.

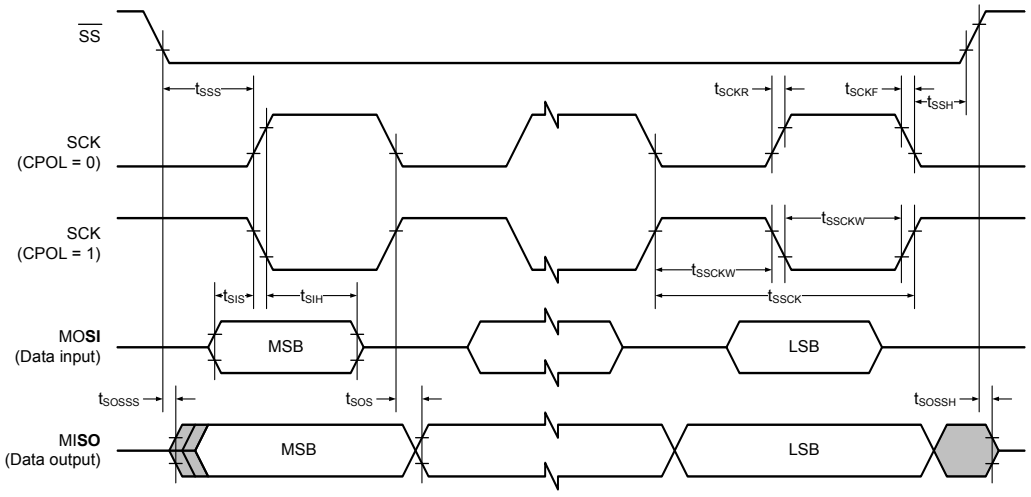

36.4.14 Clock and Oscillator Characteristics

36.4.14.1 Calibrated 32.768kHz Internal Oscillator characteristics

Table 36-118. 32.768kHz internal oscillator characteristics.

Symbol	Parameter	Condition	Min.	Typ.	Max.	Units
	Frequency			32.768		kHz
	Factory calibration accuracy	T = 85°C, V_{CC} = 3.0V	-0.5		0.5	%
	User calibration accuracy		-0.5		0.5	%

36.4.14.2 Calibrated 2MHz RC Internal Oscillator characteristics

Table 36-119. 2MHz internal oscillator characteristics.

Symbol	Parameter	Condition	Min.	Typ.	Max.	Units
	Frequency range	DFLL can tune to this frequency over voltage and temperature	1.8		2.2	MHz
	Factory calibrated frequency			2.0		MHz
	Factory calibration accuracy	T = 85°C, V_{CC}= 3.0V	-1.5		1.5	%
	User calibration accuracy		-0.2		0.2	%
	DFLL calibration stepsize			0.21		%

36.4.14.3 Calibrated and tunable 32MHz internal oscillator characteristics

Table 36-120. 32MHz internal oscillator characteristics.

Symbol	Parameter	Condition	Min.	Typ.	Max.	Units
	Frequency range	DFLL can tune to this frequency over voltage and temperature	30		55	MHz
	Factory calibrated frequency			32		MHz
	Factory calibration accuracy	T = 85°C, V_{CC}= 3.0V	-1.5		1.5	%
	User calibration accuracy		-0.2		0.2	%
	DFLL calibration step size			0.22		%

36.4.14.4 32kHz Internal ULP Oscillator characteristics

Table 36-121. 32kHz internal ULP oscillator characteristics.

Symbol	Parameter	Condition	Min.	Typ.	Max.	Units
	Output frequency			32		kHz
	Accuracy		-30		30	%

36.4.14.5 Internal Phase Locked Loop (PLL) characteristics

Table 36-122. Internal PLL characteristics.

Symbol	Parameter	Condition	Min.	Typ.	Max.	Units
f_{IN}	Input frequency	Output frequency must be within f_{OUT}	0.4		64	MHz
f_{OUT}	Output frequency (1)	V_{CC}= 1.6 - 1.8V	20		48	MHz
		V_{CC}= 2.7 - 3.6V	20		128	
	Start-up time			25		µs
	Re-lock time			25		µs

Note: 1. The maximum output frequency vs. supply voltage is linear between 1.8V and 2.7V, and can never be higher than four times the maximum CPU frequency.

36.4.14.6 External clock characteristics

Figure 36-24. External clock drive waveform

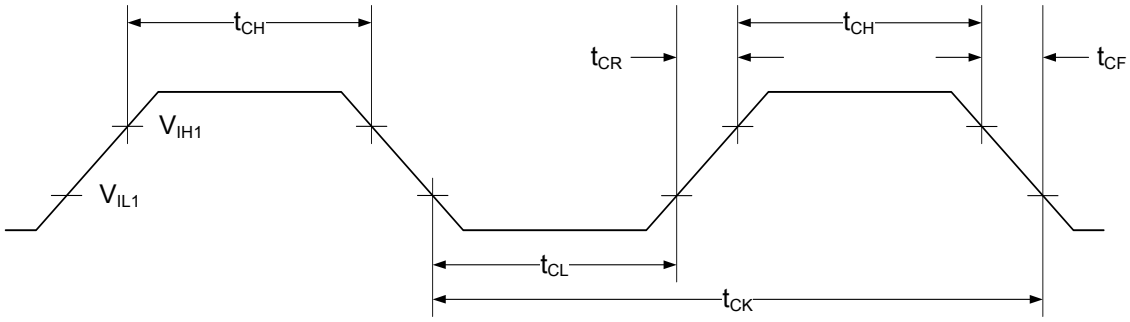

Table 36-123.External clock used as system clock without prescaling.

Symbol	Parameter	Condition	Min.	Typ.	Max.	Units
$1/t_{CK}$	Clock Frequency (1)	V_{CC} = 1.6 - 1.8V	0		12	MHz
		V_{CC} = 2.7 - 3.6V	0		32	
t_{CK}	Clock Period	V_{CC} = 1.6 - 1.8V	83.3			ns
		V_{CC} = 2.7 - 3.6V	31.5			
t_{CH}	Clock High Time	V_{CC} = 1.6 - 1.8V	30.0			ns
		V_{CC} = 2.7 - 3.6V	12.5			
t_{CL}	Clock Low Time	V_{CC} = 1.6 - 1.8V	30.0			ns
		V_{CC} = 2.7 - 3.6V	12.5			
t_{CR}	Rise Time (for maximum frequency)	V_{CC} = 1.6 - 1.8V			10	ns
		V_{CC} = 2.7 - 3.6V			3	
t_{CF}	Fall Time (for maximum frequency)	V_{CC} = 1.6 - 1.8V			10	ns
		V_{CC} = 2.7 - 3.6V			3	
Δt_{CK}	Change in period from one clock cycle to the next				10	%

Note: 1. The maximum frequency vs. supply voltage is linear between 1.6V and 2.7V, and the same applies for all other parameters with supply voltage conditions.

Figure 37-13. Idle mode supply current vs. V_{CC}.

f_{SYS} = 32MHz internal oscillator prescaled to 8MHz.

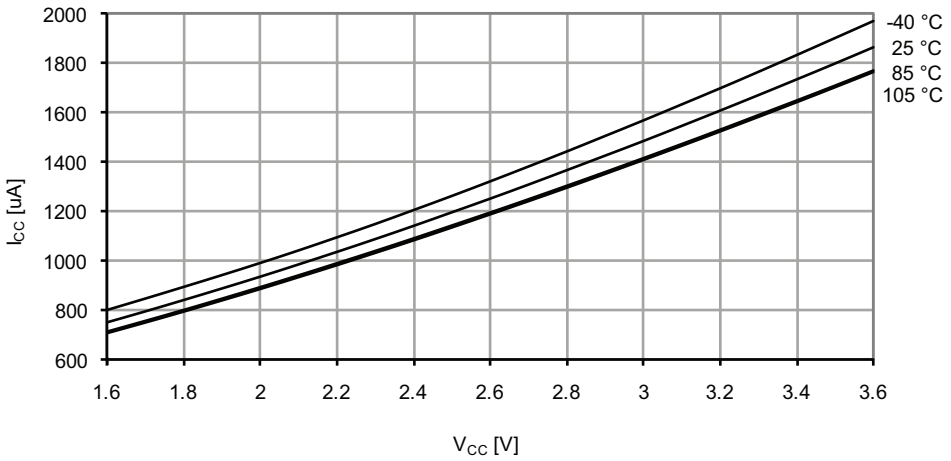

Figure 37-14. Idle mode current vs. V_{CC}.

f_{SYS} = 32MHz internal oscillator.

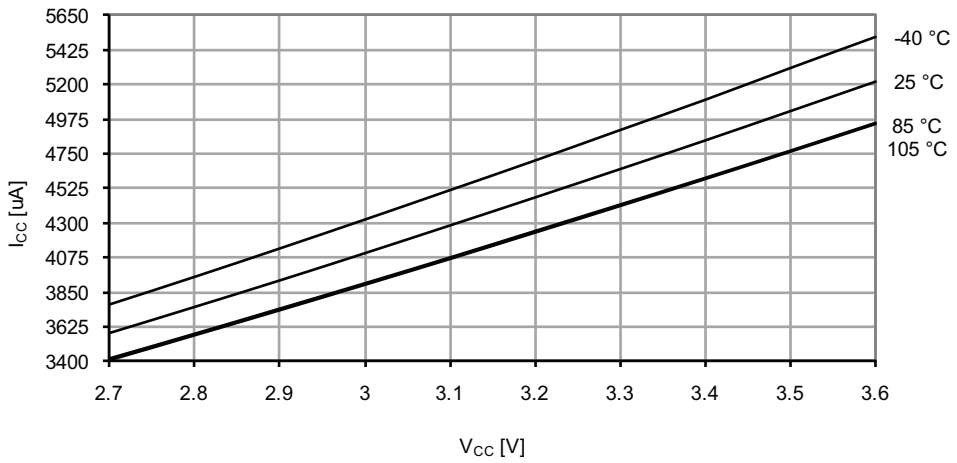

Figure 37-34. I/O pin input threshold voltage vs. V_{CC}.

V_{IL} I/O pin read as "0".

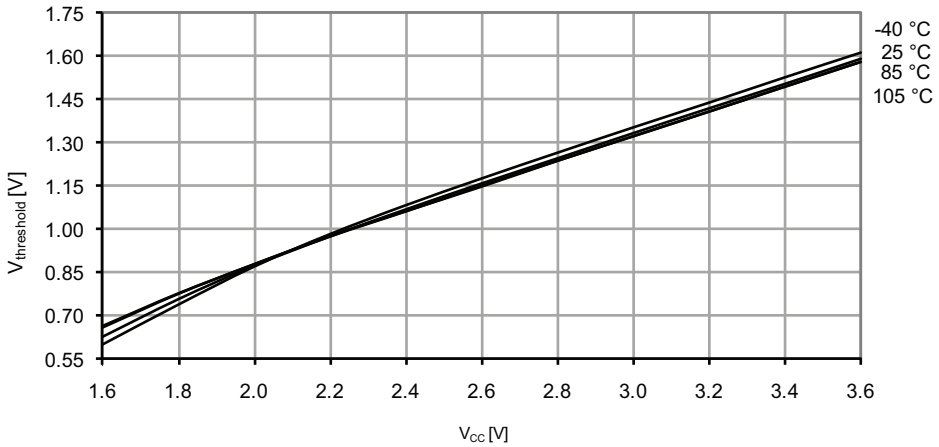

Figure 37-35. I/O pin input hysteresis vs. V_{CC}.

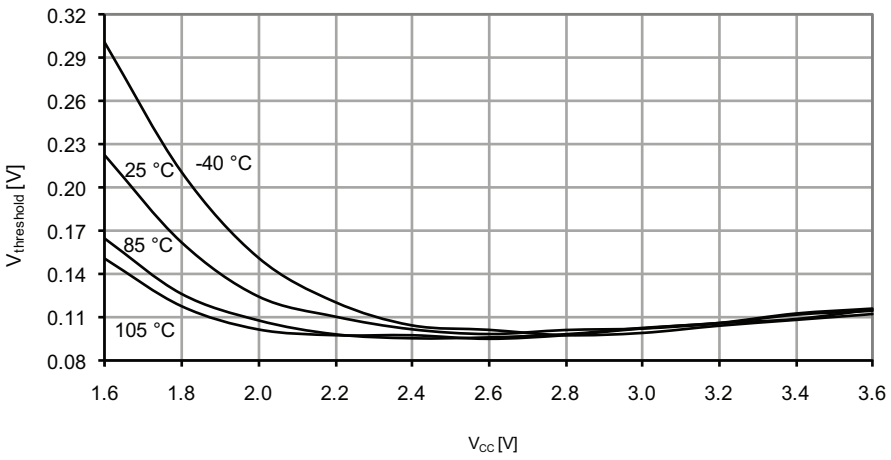

37.1.8 External Reset Characteristics

Figure 37-62. Minimum Reset pin pulse width vs. V_{CC}.

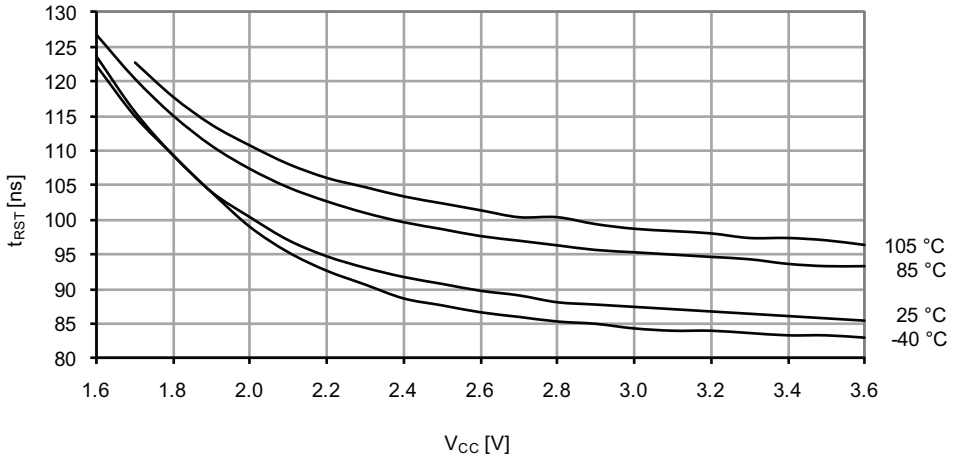

Figure 37-63. Reset pin pull-up resistor current vs. reset pin voltage.
V_{CC} = 1.8V.

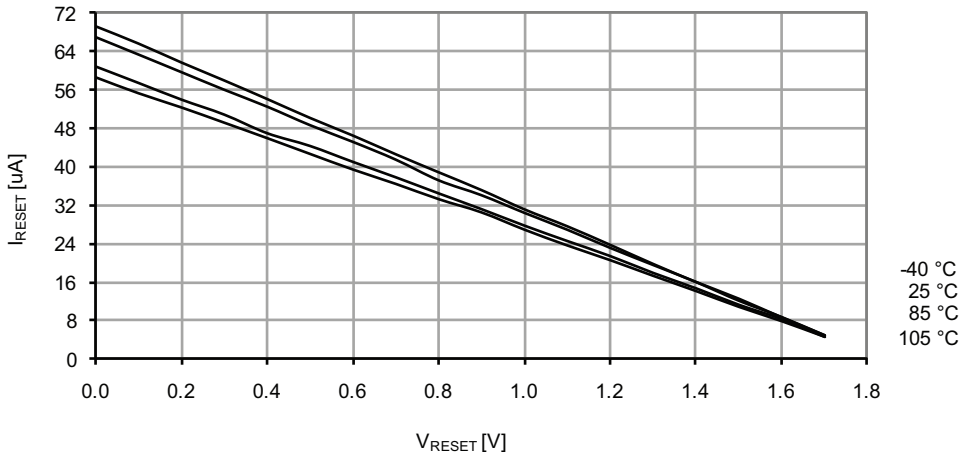

Figure 37-72. 32.768kHz internal oscillator frequency vs. calibration value.

V_{CC} = 3.0V, T = 25°C.

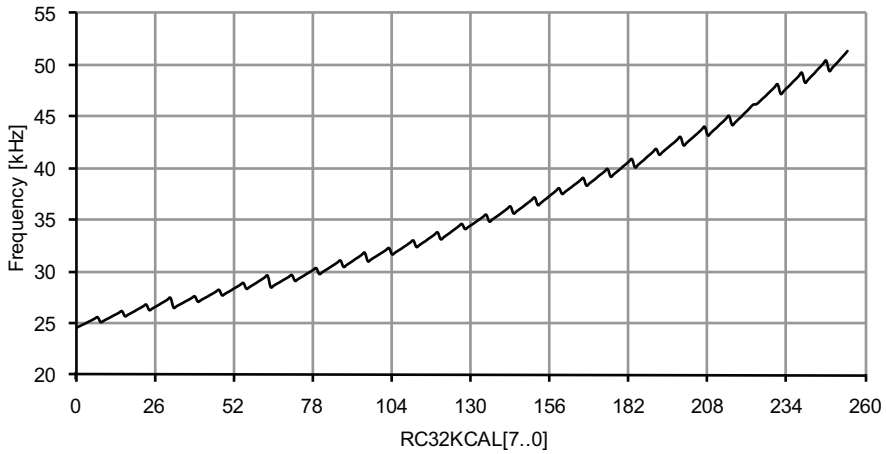

37.1.10.3 2MHz Internal Oscillator

Figure 37-73. 2MHz internal oscillator frequency vs. temperature.

DFLL disabled.

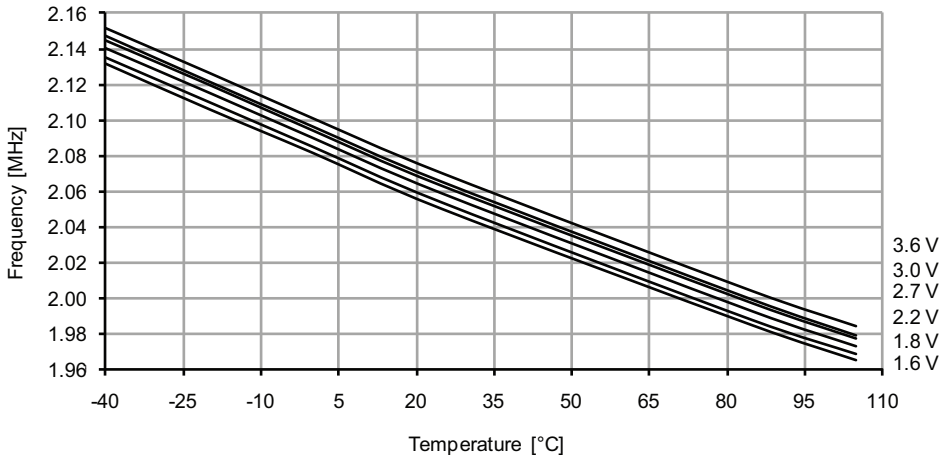

Figure 37-107. I/O pin pull-up resistor current vs. input voltage.

V_{CC} = 3.3V.

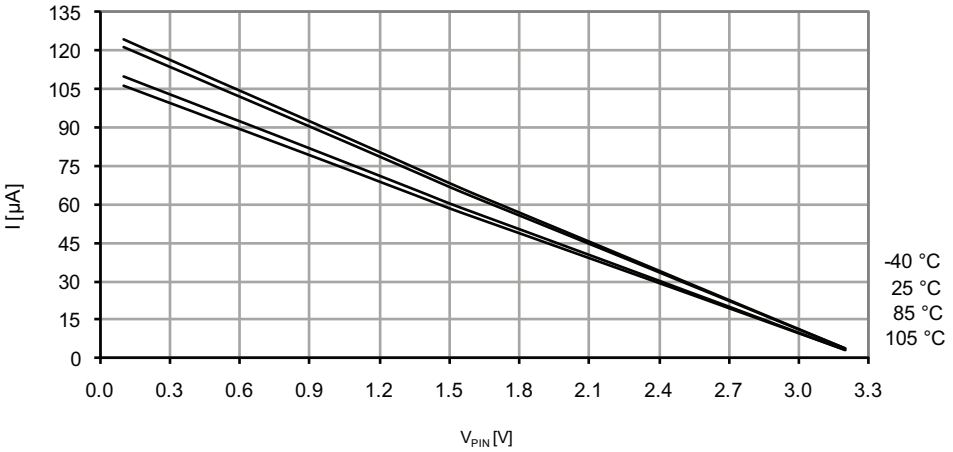

37.2.2.2 Output Voltage vs. Sink/Source Current

Figure 37-108. I/O pin output voltage vs. source current.

V_{CC} = 1.8V.

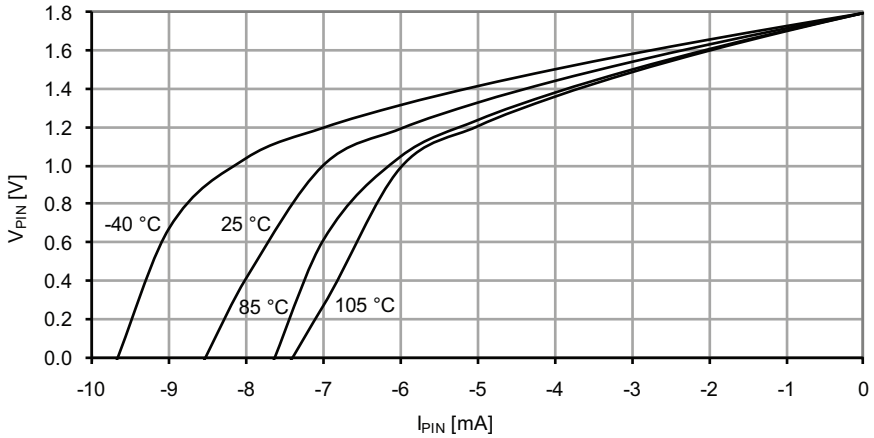

Figure 37-109. I/O pin output voltage vs. source current.

V_{CC} = 3.0V.

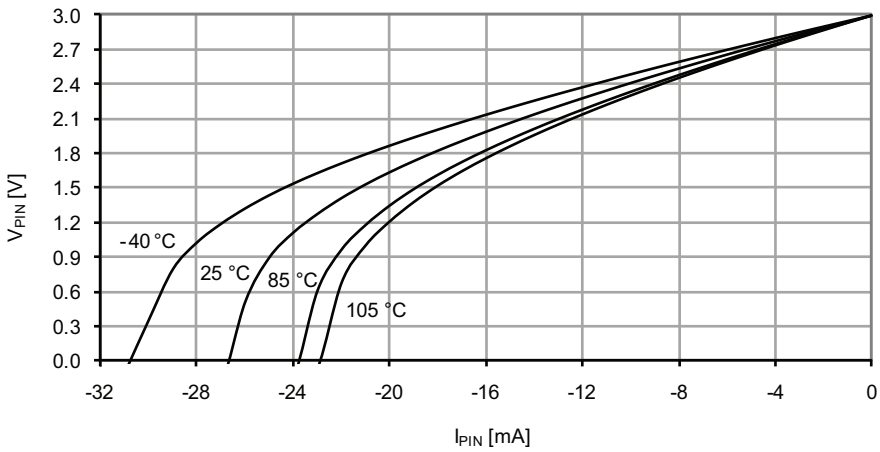

Figure 37-110. I/O pin output voltage vs. source current.

V_{CC} = 3.3V.

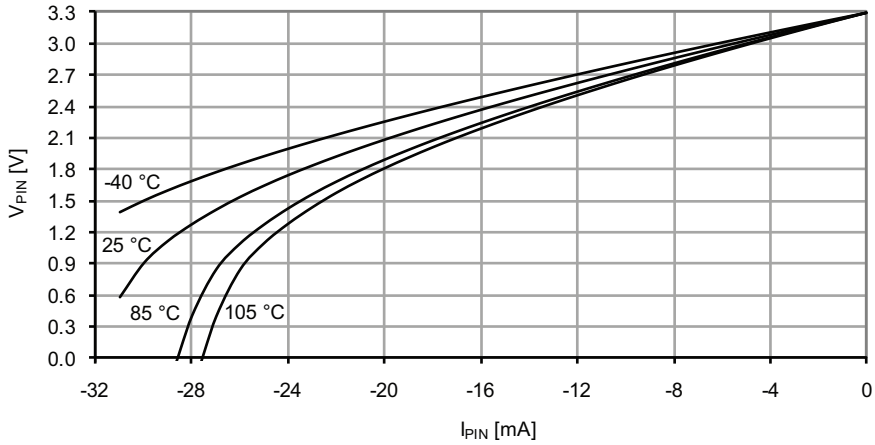

37.3.6 Internal 1.0V reference Characteristics

Figure 37-227. ADC/DAC Internal 1.0V reference vs. temperature.

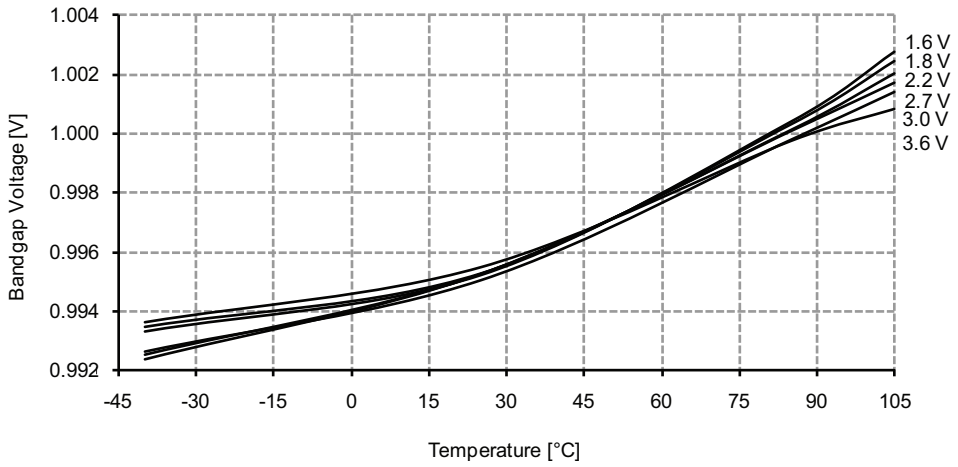

37.3.7 BOD Characteristics

Figure 37-228. BOD thresholds vs. temperature.

BOD level = 1.6V.

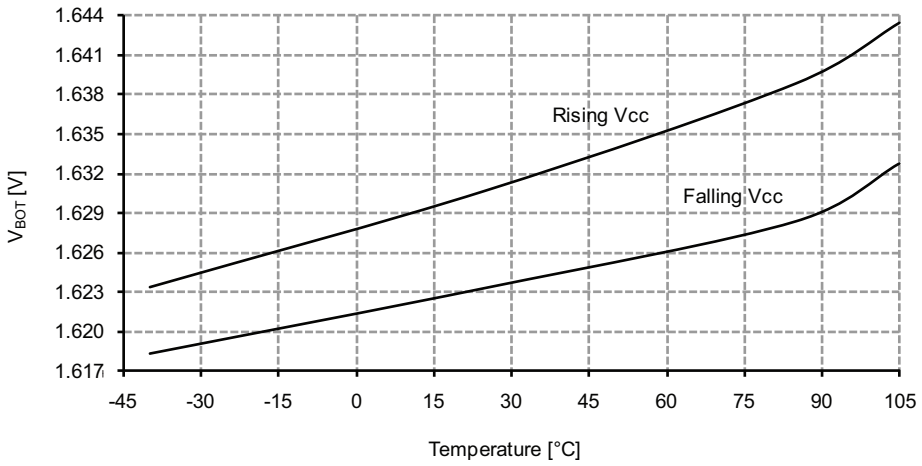

Figure 37-281. I/O pin output voltage vs. sink current.

V_{CC} = 3.0V

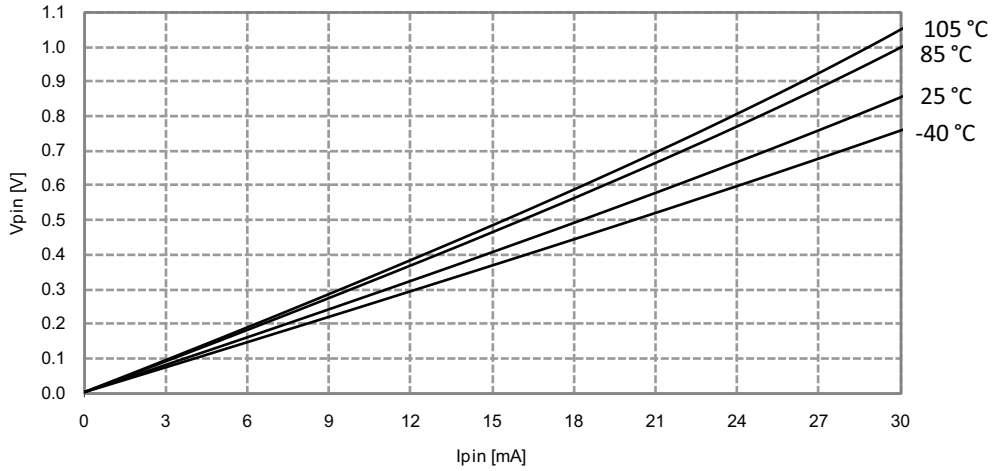

Figure 37-282. I/O pin output voltage vs. sink current.

V_{CC} = 3.3V

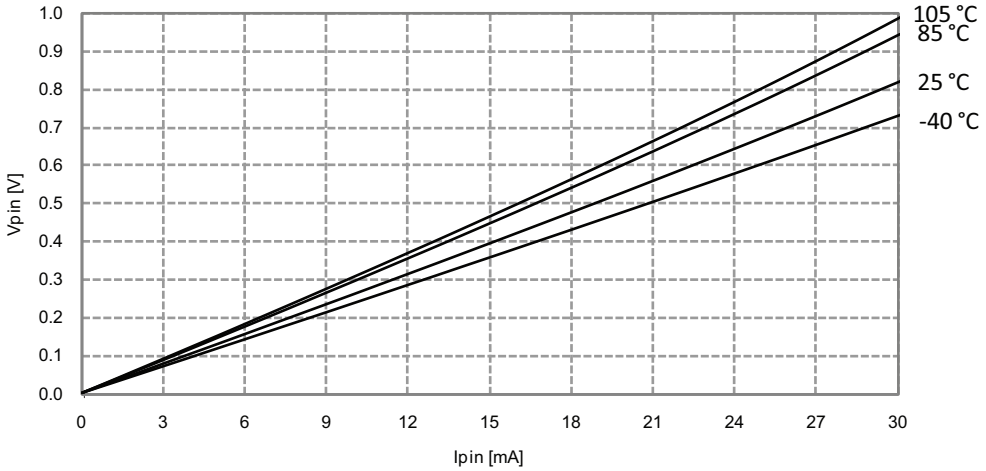

Figure 37-291. DNL error vs. external V_{REF}

T = 25°C, V_{CC} = 3.6V, external reference

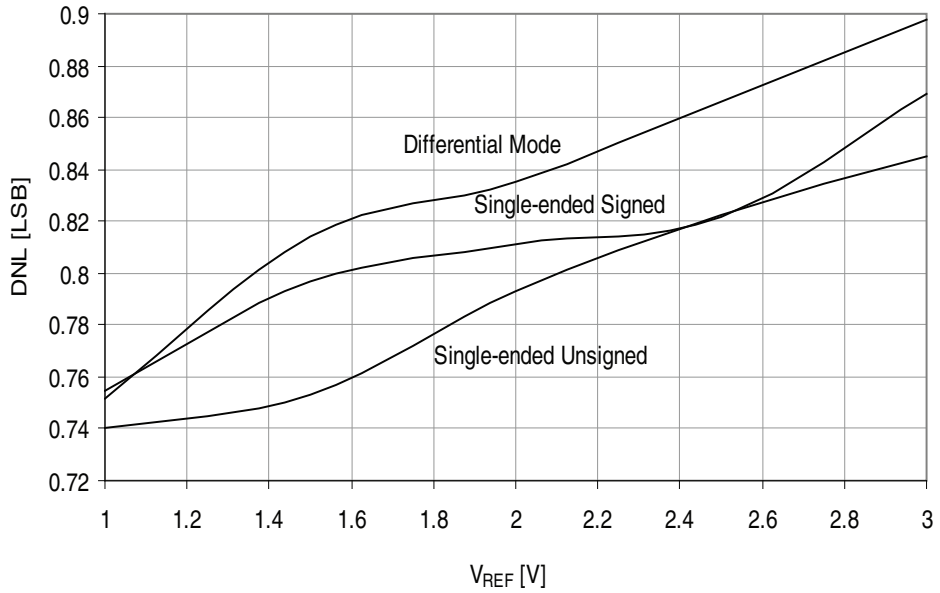

Figure 37-292. DNL error vs. sample rate

T = 25°C, V_{CC} = 3.6V, V_{REF} = 3.0V external

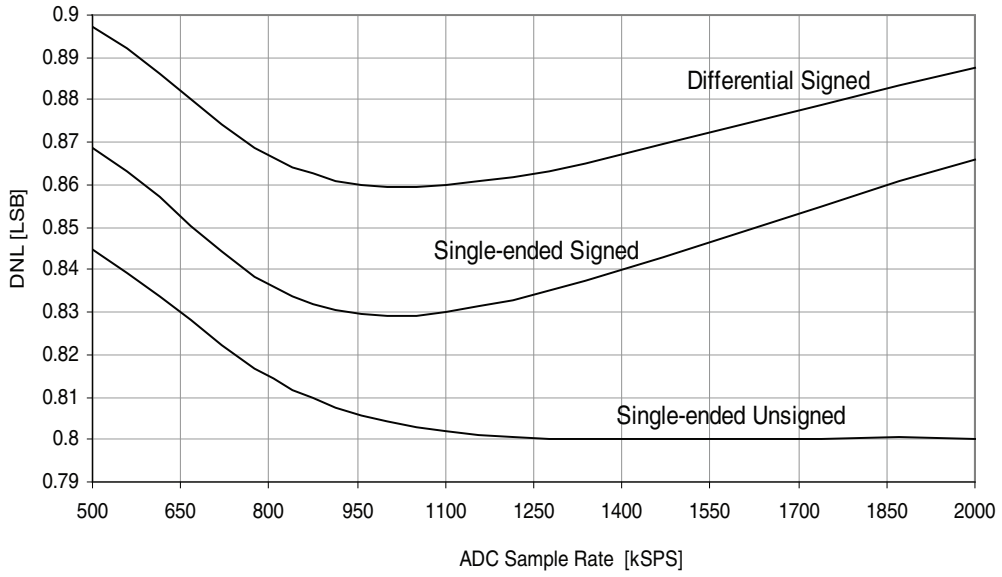

Figure 37-313. BOD thresholds vs. temperature.

BOD level = 3.0V

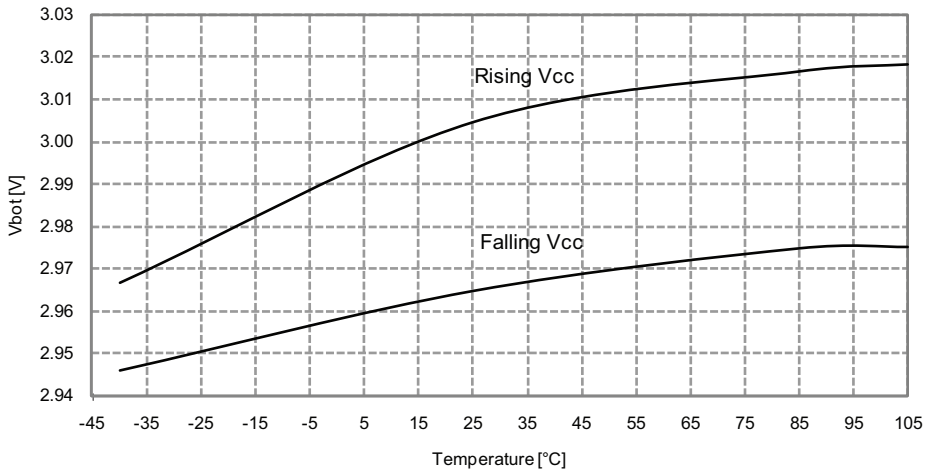

37.4.8 External Reset Characteristics

Figure 37-314. Minimum Reset pin pulse width vs. V_{CC}

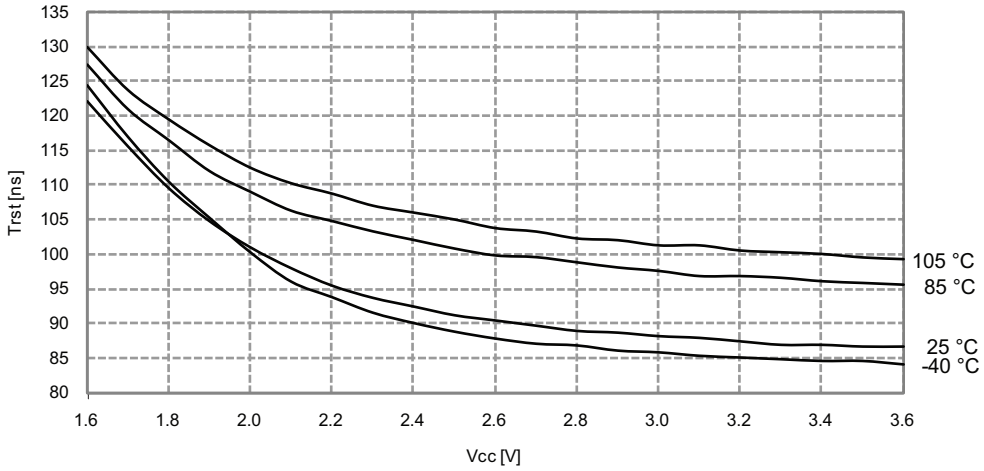

Figure 37-315. Reset pin pull-up resistor current vs. reset pin voltage

V_{CC} = 1.8V

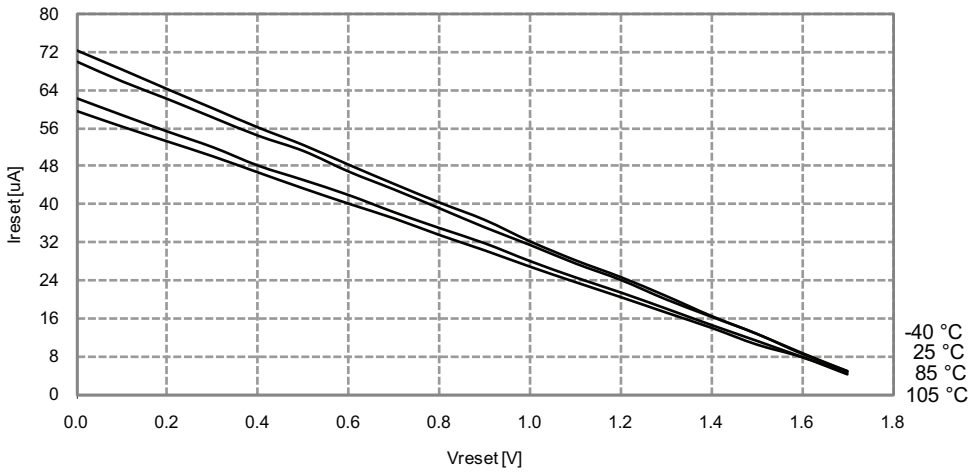

Figure 37-316. Reset pin pull-up resistor current vs. reset pin voltage

V_{CC} = 3.0V