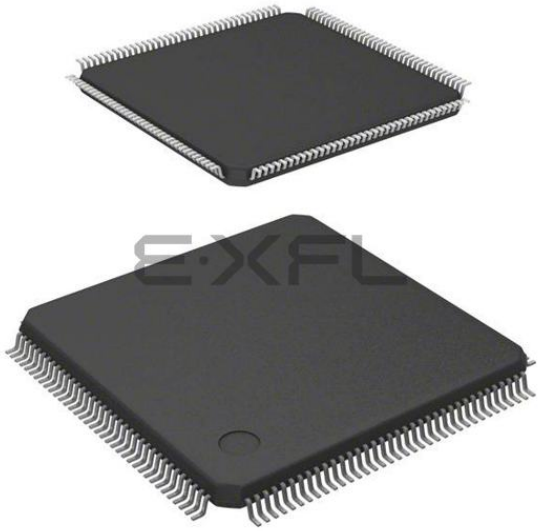

Welcome to E-XFL.COM

What is "Embedded - Microcontrollers"?

"Embedded - Microcontrollers" refer to small, integrated circuits designed to perform specific tasks within larger systems. These microcontrollers are essentially compact computers on a single chip, containing a processor core, memory, and programmable input/output peripherals. They are called "embedded" because they are embedded within electronic devices to control various functions, rather than serving as standalone computers. Microcontrollers are crucial in modern electronics, providing the intelligence and control needed for a wide range of applications.

Applications of "Embedded - Microcontrollers"

Details	
Product Status	Active
Core Processor	ARM® Cortex®-M4
Core Size	32-Bit Single-Core
Speed	120MHz
Connectivity	CANbus, EBI/EMI, I²C, IrDA, LINbus, MMC/SD, SAI, SPI, UART/USART, USB OTG
Peripherals	Brown-out Detect/Reset, DMA, LCD, POR, PWM, WDT
Number of I/O	115
Program Memory Size	2MB (2M x 8)
Program Memory Type	FLASH
EEPROM Size	-
RAM Size	640K x 8
Voltage - Supply (Vcc/Vdd)	1.71V ~ 3.6V
Data Converters	A/D 16x12b; D/A 2x12b
Oscillator Type	Internal
Operating Temperature	-40°C ~ 85°C (TA)
Mounting Type	Surface Mount
Package / Case	144-LQFP
Supplier Device Package	144-LQFP (20x20)
Purchase URL	https://www.e-xfl.com/product-detail/stmicroelectronics/stm32l4s7zit6

Contents

1 Introduction 12

2 Description 13

3 Functional overview 17

3.1 Arm® Cortex®-M4 core with FPU 17
3.2 Adaptive real-time memory accelerator (ART Accelerator™) 17
3.3 Memory protection unit 17
3.4 Embedded Flash memory 18
3.5 Embedded SRAM 19
3.6 Multi-AHB bus matrix 20
3.7 Firewall 20
3.8 Boot modes 21
3.9 Cyclic redundancy check calculation unit (CRC) 21
3.10 Power supply management 22
3.10.1 Power supply schemes 22
3.10.2 Power supply supervisor 25
3.10.3 Voltage regulator 25
3.10.4 Low-power modes 27
3.10.5 Reset mode 35
3.10.6 VBAT operation 35
3.11 Interconnect matrix 35
3.12 Clocks and startup 37
3.13 General-purpose inputs/outputs (GPIOs) 40
3.14 Direct memory access controller (DMA) 40
3.15 DMA request router (DMAMux) 41
3.16 Chrom-ART Accelerator™ (DMA2D) 41
3.17 Chrom-GRC™ (GFXMMU) 41
3.18 Interrupts and events 42
3.18.1 Nested vectored interrupt controller (NVIC) 42
3.18.2 Extended interrupt/event controller (EXTI) 42
3.19 Analog-to-digital converter (ADC) 43

- Proprietary code readout protection (PCROP): a part of the Flash memory can be protected against read and write from third parties. The protected area is execute-only and it can only be reached by the STM32 CPU as an instruction code, while all other accesses (DMA, debug and CPU data read, write and erase) are strictly prohibited:
  - In single bank mode, two areas can be selected with 128-bit granularity.
  - In dual bank mode, one area per bank can be selected with 64-bit granularity.

  An additional option bit (PCROP_RDP) allows to select if the PCROP area is erased or not when the RDP protection is changed from Level 1 to Level 0.

The whole non-volatile memory embeds the error correction code (ECC) feature supporting:

- Single error detection and correction
- Double error detection
- The address of the ECC fail can be read in the ECC register.

3.5 Embedded SRAM

The STM32L4S5xx, STM32L4S7xx and STM32L4S9xx devices feature 640 Kbytes of embedded SRAM. This SRAM is split into three blocks:

- 192 Kbytes mapped at address 0x2000 0000 (SRAM1).
- 64 Kbytes located at address 0x1000 0000 with hardware parity check (SRAM2). This memory is also mapped at address 0x2003 0000 offering a contiguous address space with the SRAM1.
  This block is accessed through the ICode/DCode buses for maximum performance.
  These 64 Kbytes SRAM can also be retained in Standby mode.
  The SRAM2 can be write-protected with 1 Kbyte granularity.
- 384 Kbytes mapped at address 0x2004 0000 - (SRAM3).

The memory can be accessed in read/write at CPU clock speed with 0 wait states.

3.10.4 Low-power modes

The ultra-low-power STM32L4Sxxx devices support seven low-power modes to achieve the best compromise between low-power consumption, short startup time, available peripherals and available wake-up sources. *Table 4* shows the related STM32L4Sxxx modes overview.

Table 4. STM32L4S5xx modes overview

Mode	Regulator[1]	CPU	Flash	SRAM	Clocks	DMA & Peripherals[2]	Wakeup source
Run	Range 1	Yes	ON[3]	ON	Any	All	N/A
	Range2					All except OTG_FS, RNG, LCD-TFT	
LPRun	LPR	Yes	ON[3]	ON	Any except PLL	All except OTG_FS, RNG, LCD-TFT	N/A
Sleep	Range 1	No	ON[3]	ON[4]	Any	All	Any interrupt or event
	Range 2					All except OTG_FS, RNG, LCD-TFT	
LPSleep	LPR	No	ON[3]	ON[4]	Any except PLL	All except OTG_FS, RNG, LCD-TFT	Any interrupt or event
Stop 0	Range 1	No	Off	ON	LSE LSI	BOR, PVD, PVM RTC, IWDG COMPx (x=1,2) DACx (x=1,2) OPAMPx (x=1,2) USARTx (x=1...5)[5] LPUART1[5] I2Cx (x=1...4)[6] LPTIMx (x=1,2) *** All other peripherals are frozen	Reset pin, all I/Os BOR, PVD, PVM RTC, IWDG COMPx (x=1..2) USARTx (x=1...5)[5] LPUART1[5] I2Cx (x=1...4)[6] LPTIMx (x=1,2) OTG_FS[7]
	Range 2						

Table 5. Functionalities depending on the working mode[1] (continued)

Peripheral	Run	Sleep	Low-power run	Low-power sleep	Stop 0/1		Stop 2		Standby		Shutdown		VBAT
					-	Wakeup capability	-	Wakeup capability	-	Wakeup capability	-	Wakeup capability	
Clock security system on LSE	O	O	O	O	O	O	O	O	O	O	-	-	-
RTC / Auto wakeup	O	O	O	O	O	O	O	O	O	O	O	O	O
Number of RTC Tamper pins	3	3	3	3	3	O	3	O	3	O	3	O	3
Camera interface	O	O	O	O	-	-	-	-	-	-	-	-	-
LCD-TFT	O	O	-	-	-	-	-	-	-	-	-	-	-
GFXMMU	O	O	O	O	-	-	-	-	-	-	-	-	-
DSIHOST	O	O	-	-	-	-	-	-	-	-	-	-	-
USB OTG FS	O[8]	O[8]	-	-	-	O	-	-	-	-	-	-	-
USARTx (x=1,2,3,4,5)	O	O	O	O	O[6]	O[6]	-	-	-	-	-	-	-
Low-power UART (LPUART)	O	O	O	O	O[6]	O[6]	O[6]	O[6]	-	-	-	-	-
I2Cx (x=1,2,4)	O	O	O	O	O[7]	O[7]	-	-	-	-	-	-	-
I2C3	O	O	O	O	O[7]	O[7]	O[7]	O[7]	-	-	-	-	-
SPIx (x=1,2,3)	O	O	O	O	-	-	-	-	-	-	-	-	-
CAN(x=1,2)	O	O	O	O	-	-	-	-	-	-	-	-	-
SDMMC1	O	O	O	O	-	-	-	-	-	-	-	-	-
SAIx (x=1,2)	O	O	O	O	-	-	-	-	-	-	-	-	-
DFSDM1	O	O	O	O	-	-	-	-	-	-	-	-	-
ADC	O	O	O	O	-	-	-	-	-	-	-	-	-
DACx (x=1,2)	O	O	O	O	O	-	-	-	-	-	-	-	-
VREFBUF	O	O	O	O	O	-	-	-	-	-	-	-	-
OPAMPx (x=1,2)	O	O	O	O	O	-	-	-	-	-	-	-	-
COMPx (x=1,2)	O	O	O	O	O	O	O	O	-	-	-	-	-
Temperature sensor	O	O	O	O	-	-	-	-	-	-	-	-	-
Timers (TIMx)	O	O	O	O	-	-	-	-	-	-	-	-	-
Low-power timer 1 (LPTIM1)	O	O	O	O	O	O	O	O	-	-	-	-	-
Low-power timer 2 (LPTIM2)	O	O	O	O	O	O	-	-	-	-	-	-	-

- Each of the five following phases can be configured independently (enable, length, single/dual/quad communication)
  - Instruction phase
  - Address phase
  - Alternate bytes phase
  - Dummy cycles phase
  - Data phase
- Hyperbus™ support
- Integrated FIFO for reception and transmission
- 8, 16, and 32-bit data accesses are allowed
- DMA channel for indirect mode operations
- Timeout management
- Interrupt generation on FIFO threshold, timeout, status match, operation complete, and access error

3.45 OctoSPI IO manager (OctoSPIIOM)

The OctoSPI IO Manager is a low level interface allowing:

- Efficient OctoSPI pin assignment with a full IO Matrix (before alternate function map)
- Multiplexing single/dual/quad/octal SPI interface over the same bus

The OctoSPI IO Manager has the following features:

- Support up to two single/dual/quad/octal SPI Interface
- Support up to eight ports for pin assignment
- Fully programmable IO matrix for pin assignment by function (data/control/clock)
- Muxer for Single/Dual/Quad/Octal SPI interface multiplexing over the same bus

3.46 Development support

3.46.1 Serial wire JTAG debug port (SWJ-DP)

The Arm® SWJ-DP interface is embedded, and is a combined JTAG and serial wire debug port that enables either a serial wire debug or a JTAG probe to be connected to the target.

Debug is performed using two pins only instead of five required by the JTAG (JTAG pins could be re-used as GPIO with alternate function): the JTAG TMS and TCK pins are shared with SWDIO and SWCLK, respectively, and a specific sequence on the TMS pin is used to switch between JTAG-DP and SW-DP.

Table 14. Legend/abbreviations used in the pinout table

Name		Abbreviation	Definition
Pin name		Unless otherwise specified in brackets below the pin name, the pin function during and after reset is the same as the actual pin name	
Pin type		S	Supply pin
		I	Input only pin
		I/O	Input / output pin
I/O structure		FT	5 V tolerant I/O
		TT	3.6 V tolerant I/O
		B	Dedicated BOOT0 pin
		RST	Bidirectional reset pin with embedded weak pull-up resistor
		Option for TT or FT I/Os	
		_f (1)	I/O, Fm+ capable
		_l (2)	I/O, with LCD function supplied by V_{LCD}
		_u (3)	I/O, with USB function supplied by V_{DDUSB}
		_a (4)	I/O, with Analog switch function supplied by V_{DDA}
		_s (5)	I/O supplied only by V_{DDIO2}
Notes		Unless otherwise specified by a note, all I/Os are set as analog inputs during and after reset.	
Pin functions	Alternate functions	Functions selected through GPIOx_AFR registers	
	Additional functions	Functions directly selected/enabled through peripheral registers	

1. The related I/O structures in *Table 15* are: FT_f, FT_fa, FT_fl, FT_fla.
2. The related I/O structures in *Table 15* are: FT_l, FT_fl, FT_lu.
3. The related I/O structures in *Table 15* are: FT_u, FT_lu.
4. The related I/O structures in *Table 15* are: FT_a, FT_la, FT_fa, FT_fla, TT_a, TT_la.
5. The related I/O structures in *Table 15* are: FT_s, FT_fs.

Table 31. Typical current consumption in Run and Low-power run modes, with different codes running from Flash, ART enable (Cache ON Prefetch OFF) (continued)

Symbol	Parameter	Conditions		Code	TYP Single Bank Mode	TYP Dual Bank Mode	Unit	TYP Single Bank Mode	TYP Dual Bank Mode	Unit
		-	Voltage scaling		25°C	25°C		25°C	25°C	
I_{DD} (LPRun)	Supply current in Low-power run	f_{HCLK} = f_{MSI} = 2MHz all pripherals disable		Reduced code(1)	490	460	µA	245	230	µA/MHz
				Coremark	520	515		260	258	
				Dhrystone2.1	530	530		265	265	
				Fibonacci	470	495		235	248	
				While(1)	455	515		228	258	

1. Reduced code used for characterization results provided in *Table 26*, *Table 28*, *Table 30*.

Table 43. Peripheral current consumption (continued)

Peripheral		Range 1 Boost Mode	Range 1 Normal Mode	Range 2	Low-power run and sleep	Unit
APB1 (Cont.)	USART2 independent clock domain	5.35	5	4.15	4.5	µA/MHz
	USART2 APB clock domain	3	2.75	2.5	2.5	
	USART3 independent clock domain	6.35	6	5	5.5	
	USART3 APB clock domain	2.6	2.4	2.1	2.5	
	UART4 independent clock domain	5.15	4.9	3.75	4.5	
	UART4 APB clock domain	2.5	2.25	2.1	2.5	
	UART5 independent clock domain	5.4	5	4.15	5	
	UART5 APB clock domain	2.4	2.25	2.1	2	
	WWDG	0.75	0.625	0.835	0.5	
	All APB1 on	110	100	84	97	
APB2	AHB to APB2 bridge	0.185	0.15	0.125	0.5	µA/MHz
	DFSDM	9.5	9	7.5	8.5	
	DSI independent clock domain	33	34.5	29.5	NA	
	DSI APB clock domain	13	7.15	29	NA	
	FW	0.665	0.625	0.5	0.5	
	LTDC independent clock domain	35.5	34.5	40	NA	
	LTDC APB clock domain	18	17	14	NA	
	SAI1 independent clock domain	3.1	2.9	2.5	3	
	SAI1 APB clock domain	2.6	2.4	1.9	2	
	SAI2 independent clock domain	3.15	3	2.55	3	
	SAI2 APB clock domain	2.6	2.4	1.9	2.5	
	SPI1	2.25	2.15	1.75	1	
	SYSCFG/VREFBUF/COMP	0.565	0.6	0.5	0.5	

1. Refer to *Figure 33: I/O input characteristics*.
2. Tested in production.
3. Guaranteed by design.
4. Max(V_{DDXXX}) is the maximum value of all the I/O supplies. Refer to *Table: Legend/Abbreviations used in the pinout table.*
5. All TX_xx IO except FT_lu, FT_u, PB2 and PC3.
6. This value represents the pad leakage of the IO itself. The total product pad leakage is provided by this formula:
   $I_{Total_Ileak_max}$ = 10 µA + [number of IOs where V_{IN} is applied on the pad] x I_{lkg}(Max).
7. To sustain a voltage higher than MIN(V_{DD}, V_{DDA}, V_{DDUSB}, V_{LCD}) +0.3 V, the internal Pull-up and Pull-Down resistors must be disabled.
8. Refer to I_{bias} in *Table 83: OPAMP characteristics* for the values of the OPAMP dedicated input leakage current.
9. Pull-up and pull-down resistors are designed with a true resistance in series with a switchable PMOS/NMOS. This PMOS/NMOS contribution to the series resistance is minimal (~10% order).

All I/Os are CMOS- and TTL-compliant (no software configuration required). Their characteristics cover more than the strict CMOS-technology or TTL parameters. The coverage of these requirements is shown in *Figure 33* for standard I/Os, and in *Figure 33* for 5 V tolerant I/Os.

Figure 33. I/O input characteristics

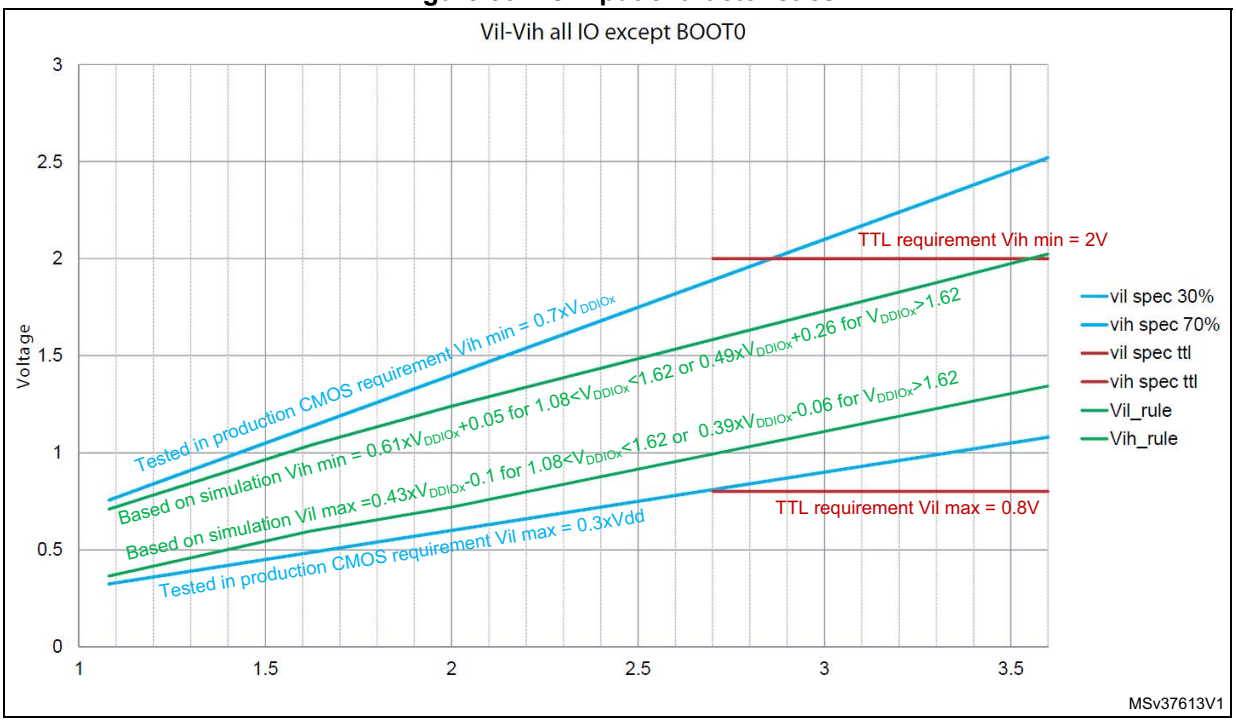

Output driving current

The GPIOs (general purpose input/outputs) can sink or source up to ±8 mA, and sink or source up to ± 20 mA (with a relaxed V_{OL}/V_{OH}).

6.3.21 Analog-to-digital converter characteristics

Unless otherwise specified, the parameters given in *Table 73* are preliminary values derived from tests performed under ambient temperature, f_{PCLK} frequency and V_{DDA} supply voltage conditions summarized in *Table 22: General operating conditions*.

Note: It is recommended to perform a calibration after each power-up.

Table 73. ADC characteristics(1) (2)

Symbol	Parameter	Conditions	Min	Typ	Max	Unit
V_{DDA}	Analog supply voltage	-	1.62	-	3.6	V
V_{REF+}	Positive reference voltage	$V_{DDA} \geq 2$ V	2	-	V_{DDA}	V
		$V_{DDA} < 2$ V	V_{DDA}			V
V_{REF-}	Negative reference voltage	-	V_{SSA}			V
f_{ADC}	ADC clock frequency	Range 1	-	-	80	MHz
		Range 2	-	-	26	
f_s	Sampling rate for FAST channels	Resolution = 12 bits	-	-	5.33	Msps
		Resolution = 10 bits	-	-	6.15	
		Resolution = 8 bits	-	-	7.27	
		Resolution = 6 bits	-	-	8.88	
	Sampling rate for SLOW channels	Resolution = 12 bits	-	-	4.21	
		Resolution = 10 bits	-	-	4.71	
		Resolution = 8 bits	-	-	5.33	
		Resolution = 6 bits	-	-	6.15	
f_{TRIG}	External trigger frequency	f_{ADC} = 80 MHz Resolution = 12 bits	-	-	5.33	MHz
		Resolution = 12 bits	-	-	15	$1/f_{ADC}$
V_{AIN} (3)	Conversion voltage range(2)	-	0	-	V_{REF+}	V
R_{AIN}	External input impedance	-	-	-	50	kΩ
C_{ADC}	Internal sample and hold capacitor	-	-	5	-	pF
t_{STAB}	Power-up time	-	1			conversion cycle
t_{CAL}	Calibration time	f_{ADC} = 80 MHz	1.45			µs
		-	116			$1/f_{ADC}$

Table 76. ADC accuracy - limited test conditions 2(1)(2)(3) (continued)

Symbol	Parameter	Conditions(4)			Min	Typ	Max	Unit
THD	Total harmonic distortion	ADC clock frequency ≤ 80 MHz, Sampling rate ≤ 5.33 Msps, 2 V ≤ V_{DDA}	Single ended	Fast channel (max speed)	-	-74	-65	dB
				Slow channel (max speed)	-	-74	-67	
			Differential	Fast channel (max speed)	-	-79	-70	
				Slow channel (max speed)	-	-79	-71	

1. Guaranteed by design.
2. ADC DC accuracy values are measured after internal calibration.
3. ADC accuracy vs. negative Injection Current: Injecting negative current on any analog input pins should be avoided as this significantly reduces the accuracy of the conversion being performed on another analog input. It is recommended to add a Schottky diode (pin to ground) to analog pins which may potentially inject negative current.
4. The I/O analog switch voltage booster is enable when V_{DDA} < 2.4 V (BOOSTEN = 1 in the SYSCFG_CFGR1 when V_{DDA} < 2.4 V). It is disable when V_{DDA} ≥ 2.4 V. No oversampling.

Table 83. OPAMP characteristics(1) (continued)

Symbol	Parameter	Conditions		Min	Typ	Max	Unit
I_{LOAD}	Drive current	Normal mode	$V_{DDA} \geq 2$ V	-	-	500	µA
		Low-power mode		-	-	100	
I_{LOAD_PGA}	Drive current in PGA mode	Normal mode	$V_{DDA} \geq 2$ V	-	-	450	
		Low-power mode		-	-	50	
R_{LOAD}	Resistive load (connected to VSSA or to VDDA)	Normal mode	$V_{DDA} < 2$ V	4	-	-	kΩ
		Low-power mode		20	-	-	
R_{LOAD_PGA}	Resistive load in PGA mode (connected to VSSA or to V_{DDA})	Normal mode	$V_{DDA} < 2$ V	4.5	-	-	
		Low-power mode		40	-	-	
C_{LOAD}	Capacitive load	-		-	-	50	pF
CMRR	Common mode rejection ratio	Normal mode		-	-85	-	dB
		Low-power mode		-	-90	-	
PSRR	Power supply rejection ratio	Normal mode	$C_{LOAD} \leq 50$ pf, $R_{LOAD} \geq 4$ kΩ DC	70	85	-	dB
		Low-power mode	$C_{LOAD} \leq 50$ pf, $R_{LOAD} \geq 20$ kΩ DC	72	90	-	
GBW	Gain Bandwidth Product	Normal mode	$V_{DDA} \geq 2.4$ V (OPA_RANGE = 1)	550	1600	2200	kHz
		Low-power mode		100	420	600	
		Normal mode	$V_{DDA} < 2.4$ V (OPA_RANGE = 0)	250	700	950	
		Low-power mode		40	180	280	
SR(2)	Slew rate (from 10 and 90% of output voltage)	Normal mode	$V_{DDA} \geq 2.4$ V	-	700	-	V/ms
		Low-power mode		-	180	-	
		Normal mode	$V_{DDA} < 2.4$ V	-	300	-	
		Low-power mode		-	80	-	
AO	Open loop gain	Normal mode		55	110	-	dB
		Low-power mode		45	110	-	
V_{OHSAT}(2)	High saturation voltage	Normal mode	I_{load} = max or R_{load} = min Input at V_{DDA}.	V_{DDA} - 100	-	-	mV
		Low-power mode		V_{DDA} - 50	-	-	
V_{OLSAT}(2)	Low saturation voltage	Normal mode	I_{load} = max or R_{load} = min Input at 0.	-	-	100	
		Low-power mode		-	-	50	
φ_m	Phase margin	Normal mode		-	74	-	°
		Low-power mode		-	66	-	

SAI characteristics

Unless otherwise specified, the parameters given in *Table 93* for SAI are derived from tests performed under the ambient temperature, f_{PCLKx} frequency and V_{DD} supply voltage conditions summarized in*Table 22: General operating conditions*, with the following configuration:

- Output speed is set to OSPEEDRy[1:0] = 10
- Capacitive load C = 30 pF
- Measurement points are done at CMOS levels: 0.5 x V_{DD}

Refer to *Section 6.3.17: I/O port characteristics* for more details on the input/output alternate function characteristics (CK,SD,FS).

Figure 45. Asynchronous non-multiplexed SRAM/PSRAM/NOR read waveforms

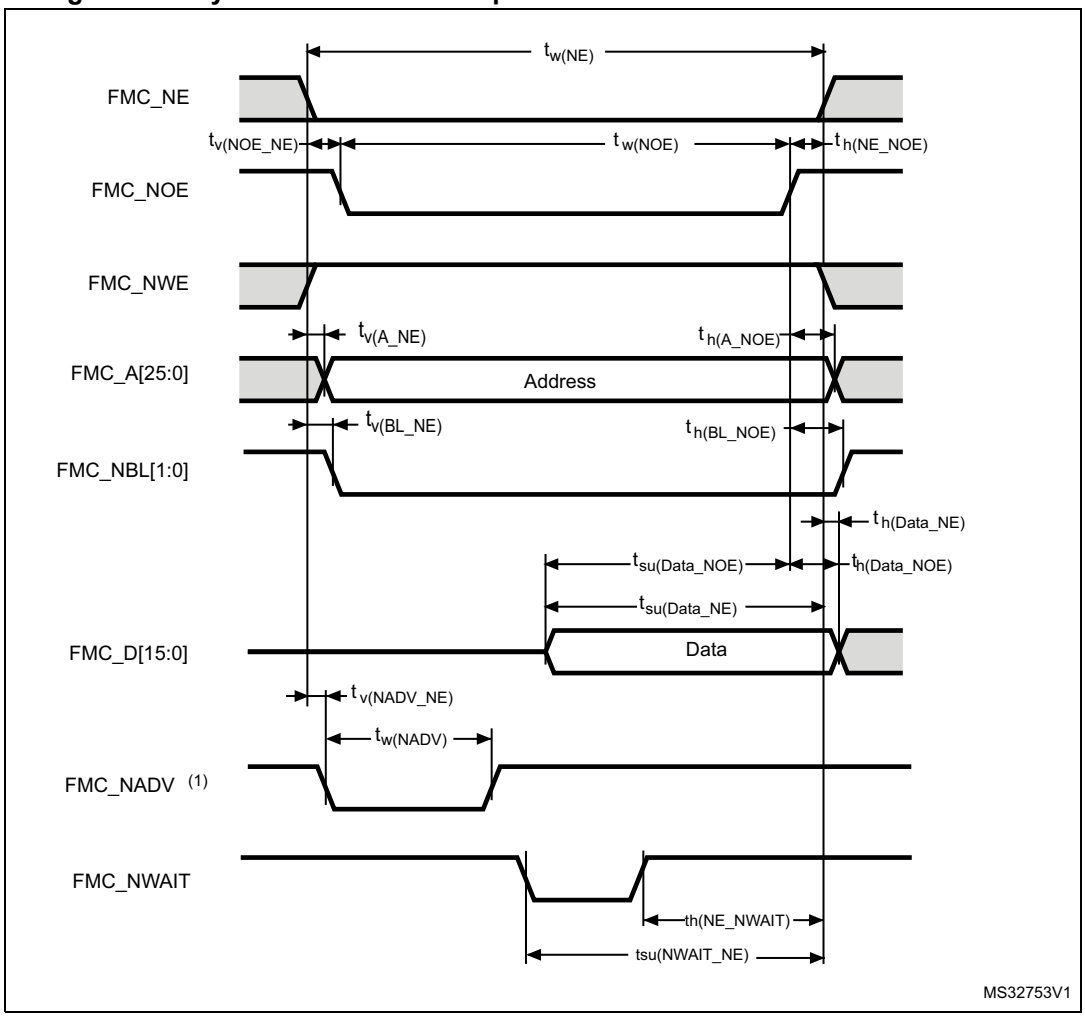

Table 97. Asynchronous non-multiplexed SRAM/PSRAM/NOR read timings(1)(2)

Symbol	Parameter	Min	Max	Unit
$t_{w(NE)}$	FMC_NE low time	$3T_{HCLK}$-0.5	$3T_{HCLK}$+1	ns
$t_{v(NOE_NE)}$	FMC_NEx low to FMC_NOE low	0	1	
$t_{w(NOE)}$	FMC_NOE low time	$2T_{HCLK}$-0.5	$2T_{HCLK}$+1	
$t_{h(NE_NOE)}$	FMC_NOE high to FMC_NE high hold time	T_{HCLK}	-	
$t_{v(A_NE)}$	FMC_NEx low to FMC_A valid	-	1	
$t_{h(A_NOE)}$	Address hold time after FMC_NOE high	$2T_{HCLK}$-1	-	
$t_{su(Data_NE)}$	Data to FMC_NEx high setup time	T_{HCLK}+14	-	
$t_{su(Data_NOE)}$	Data to FMC_NOEx high setup time	14	-	
$t_{h(Data_NOE)}$	Data hold time after FMC_NOE high	0	-	
$t_{h(Data_NE)}$	Data hold time after FMC_NEx high	0	-	
$t_{v(NADV_NE)}$	FMC_NEx low to FMC_NADV low	-	0	
$t_{w(NADV)}$	FMC_NADV low time	-	T_{HCLK}+1.5	

1. CL = 30 pF.
2. Guaranteed by characterization results.

Table 98. Asynchronous non-multiplexed SRAM/PSRAM/NOR read-NWAIT timings(1)(2)

Symbol	Parameter	Min	Max	Unit
$t_{w(NE)}$	FMC_NE low time	$8T_{HCLK}$-0.5	$8T_{HCLK}$+1	ns
$t_{w(NOE)}$	FMC_NWE low time	$7T_{HCLK}$-0.5	$7T_{HCLK}$+0.5	
$t_{w(NWAIT)}$	FMC_NWAIT low time	T_{HCLK}	-	
$t_{su(NWAIT_NE)}$	FMC_NWAIT valid before FMC_NEx high	$5T_{HCLK}$+12.5	-	
$t_{h(NE_NWAIT)}$	FMC_NEx hold time after FMC_NWAIT invalid	$4T_{HCLK}$+12	-	

1. CL = 30 pF.
2. Guaranteed by characterization results.

Table 100. Asynchronous non-multiplexed SRAM/PSRAM/NOR write-NWAIT timings(1)(2)

Symbol	Parameter	Min	Max	Unit
$t_{w(NE)}$	FMC_NE low time	$9T_{HCLK}$-0.5	$9T_{HCLK}$+1.5	ns
$t_{w(NWE)}$	FMC_NWE low time	$6T_{HCLK}$-0.5	$6T_{HCLK}$+1	
$t_{su(NWAIT_NE)}$	FMC_NWAIT valid before FMC_NEx high	$7T_{HCLK}$-13	-	
$t_{h(NE_NWAIT)}$	FMC_NEx hold time after FMC_NWAIT invalid	$5T_{HCLK}$+13	-	

1. CL = 30 pF.
2. Guaranteed by characterization results.

Figure 47. Asynchronous multiplexed PSRAM/NOR read waveforms

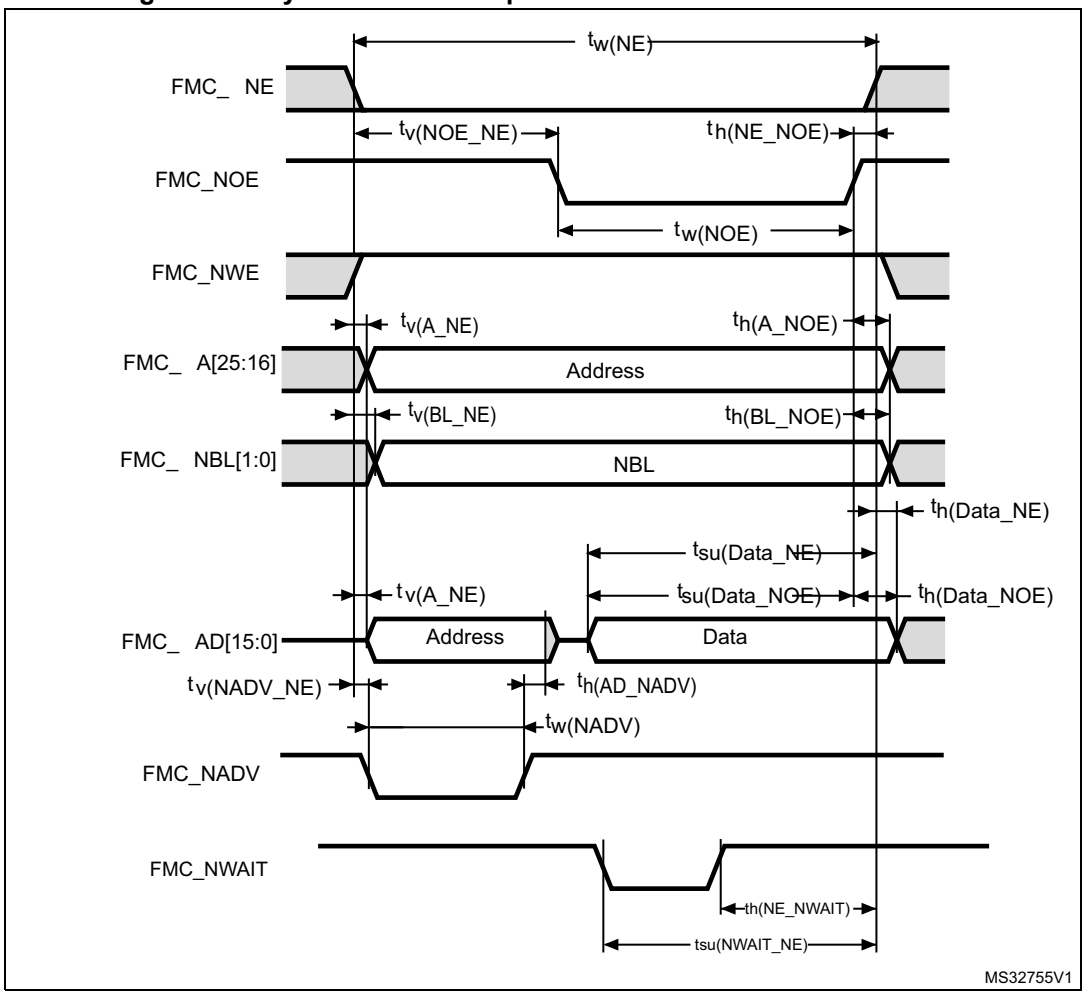

UFBGA169 device marking

The following figure gives an example of topside marking orientation versus pin 1 identifier location.

Other optional marking or inset/upset marks, which identify the parts throughout supply chain operations, are not indicated below.

Figure 69. UFBGA169 marking (package top view)

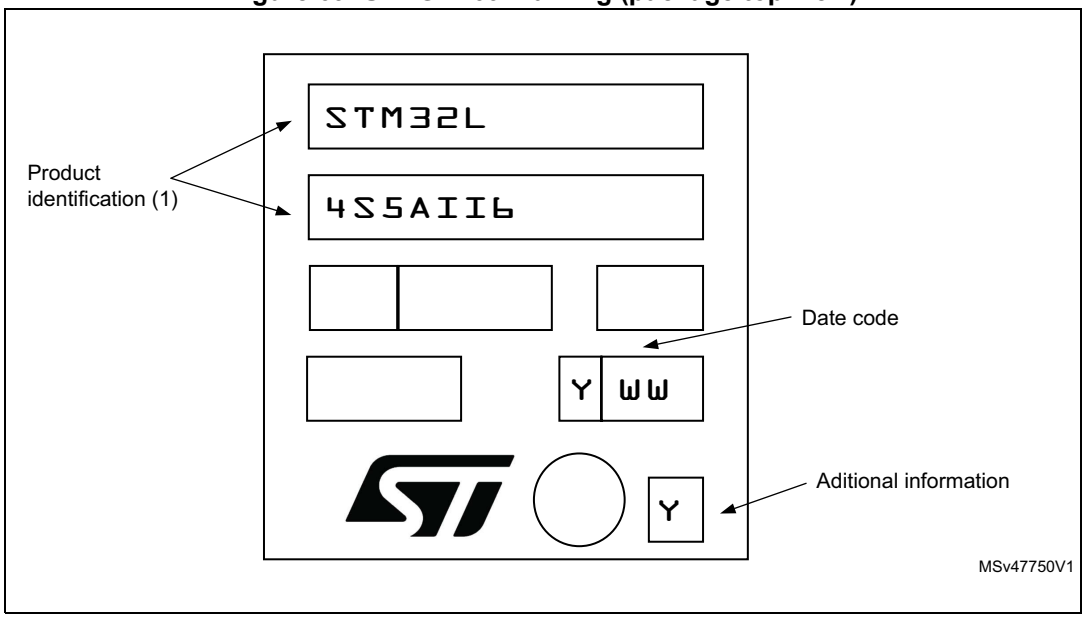

1. Parts marked as “ES”, “E” or accompanied by an Engineering Sample notification letter, are not yet qualified and therefore not yet ready to be used in production and any consequences deriving from such usage will not be at ST charge. In no event, ST will be liable for any customer usage of these engineering samples in production. ST Quality has to be contacted prior to any decision to use these Engineering samples to run qualification activity.

LQFP144 device marking

The following figures gives an example of topside marking orientation versus pin 1 identifier location.

Other optional marking or inset/upset marks, which identify the parts throughout supply chain operations, are not indicated below.

Figure 75. LQFP144 marking (package top view)

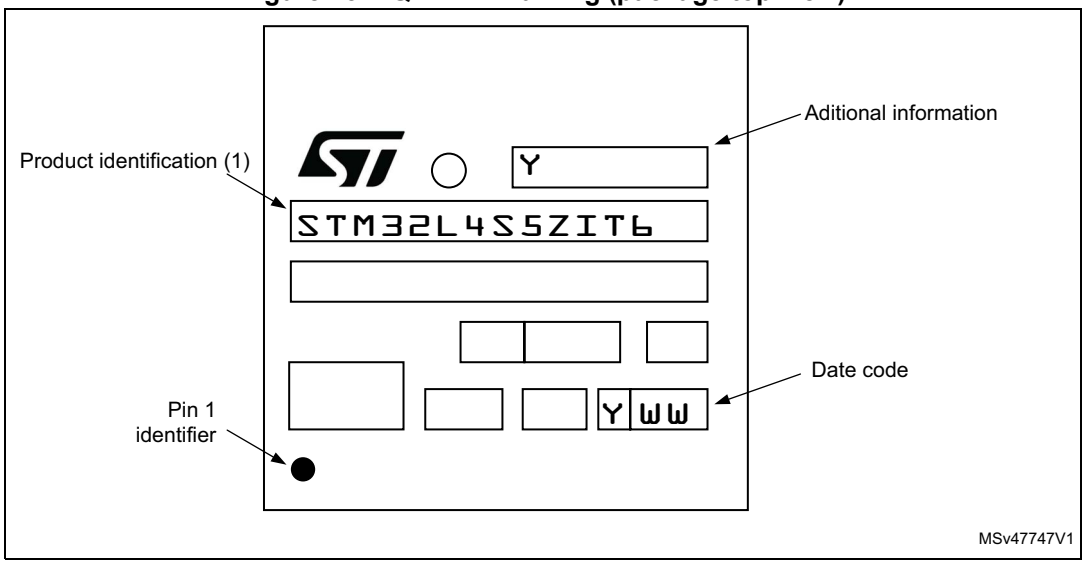

1. Parts marked as “ES”, “E” or accompanied by an Engineering Sample notification letter, are not yet qualified and therefore not yet ready to be used in production and any consequences deriving from such usage will not be at ST charge. In no event, ST will be liable for any customer usage of these engineering samples in production. ST Quality has to be contacted prior to any decision to use these Engineering samples to run qualification activity.

Table 127. LQPF100 - 100-pin, 14 x 14 mm low-profile quad flat package mechanical data (continued)

Symbol	millimeters			inches[1]		
	Min	Typ	Max	Min	Typ	Max
E1	13.800	14.000	14.200	0.5433	0.5512	0.5591
E3	-	12.000	-	-	0.4724	-
e	-	0.500	-	-	0.0197	-
L	0.450	0.600	0.750	0.0177	0.0236	0.0295
L1	-	1.000	-	-	0.0394	-
k	0.0°	3.5°	7.0°	0.0°	3.5°	7.0°
ccc	-	-	0.080	-	-	0.0031

1. Values in inches are converted from mm and rounded to 4 decimal digits.

Figure 83. LQFP100 - 100-pin, 14 x 14 mm low-profile quad flat recommended footprint

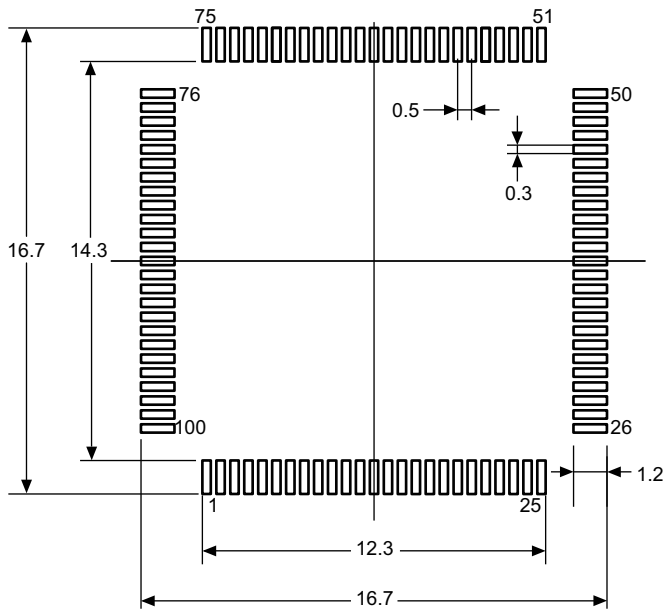

1. Dimensions are expressed in millimeters.

LQFP100 device marking

The following figure gives an example of topside marking orientation versus pin 1 identifier location.

Other optional marking or inset/upset marks, which identify the parts throughout supply chain operations, are not indicated below.

The following examples show how to calculate the temperature range needed for a given application.

Example 1: High-performance application

Assuming the following application conditions:

Maximum ambient temperature T_{Amax} = 82 °C (measured according to JESD51-2), I_{DDmax} = 50 mA, V_{DD} = 3.5 V, maximum 20 I/Os used at the same time in output at low level with I_{OL} = 8 mA, V_{OL}= 0.4 V and maximum 8 I/Os used at the same time in output at low level with I_{OL} = 20 mA, V_{OL}= 1.3 V

P_{INTmax} = 50 mA × 3.5 V= 175 mW

P_{IOmax} = 20 × 8 mA × 0.4 V + 8 × 20 mA × 1.3 V = 272 mW

This gives: P_{INTmax} = 175 mW and P_{IOmax} = 272 mW:

P_{Dmax} = 175 + 272 = 447 mW

Using the values obtained in *Table 128* T_{Jmax} is calculated as follows:

– For LQFP100, 42 °C/W

T_{Jmax} = 82 °C + (42 °C/W × 447 mW) = 82 °C + 18.774 °C = 100.774 °C

This is within the range of the suffix 6 version parts (–40 < T_J < 105 °C) see *Section 8: Ordering information*.

In this case, parts must be ordered at least with the temperature range suffix 6 (see *Section 8: Ordering information*).

Note: With this given P_{Dmax} we can find the T_{Amax} allowed for a given device temperature range (order code suffix 6 or 7).

Suffix 6: T_{Amax} = T_{Jmax} - (42°C/W × 447 mW) = 105-18.774 = 86.226 °C

Suffix 3: T_{Amax} = T_{Jmax} - (42°C/W × 447 mW) = 130-18.774 = 111.226 °C

Example 2: High-temperature application

Using the same rules, it is possible to address applications that run at high ambient temperatures with a low dissipation, as long as junction temperature T_J remains within the specified range.

Assuming the following application conditions:

Maximum ambient temperature T_{Amax} = 100 °C (measured according to JESD51-2), I_{DDmax} = 20 mA, V_{DD} = 3.5 V, maximum 20 I/Os used at the same time in output at low level with I_{OL} = 8 mA, V_{OL}= 0.4 V

P_{INTmax} = 20 mA × 3.5 V= 70 mW

P_{IOmax} = 20 × 8 mA × 0.4 V = 64 mW

This gives: P_{INTmax} = 70 mW and P_{IOmax} = 64 mW:

P_{Dmax} = 70 + 64 = 134 mW

Thus: P_{Dmax} = 134 mW

Using the values obtained in *Table 128* T_{Jmax} is calculated as follows:

– For LQFP100, 42 °C/W

T_{Jmax} = 100 °C + (42 °C/W × 134 mW) = 100 °C + 5.628 °C = 105.628 °C

This is above the range of the suffix 6 version parts (–40 < T_J < 105 °C).