Welcome to E-XFL.COM

## What is "Embedded - Microcontrollers"?

"Embedded - Microcontrollers" refer to small, integrated circuits designed to perform specific tasks within larger systems. These microcontrollers are essentially compact computers on a single chip, containing a processor core, memory, and programmable input/output peripherals. They are called "embedded" because they are embedded within electronic devices to control various functions, rather than serving as standalone computers. Microcontrollers are crucial in modern electronics, providing the intelligence and control needed for a wide range of applications.

## Applications of "Embedded - Microcontrollers"

| Details | |
|---|---|
| Product Status | Obsolete |
| Core Processor | 80C51 |
| Core Size | 8-Bit |
| Speed | 48MHz |
| Connectivity | SmartCard, SPI, UART/USART, USB |
| Peripherals | LED, POR, WDT |
| Number of I/O | 46 |
| Program Memory Size | 32KB (32K x 8) |
| Program Memory Type | FLASH |
| EEPROM Size | - |
| RAM Size | 768 x 8 |
| Voltage - Supply (Vcc/Vdd) | 3V ~ 5.5V |
| Data Converters | - |
| Oscillator Type | Internal |
| Operating Temperature | -40°C ~ 85°C (TA) |
| Mounting Type | Surface Mount |
| Package / Case | 64-LQFP |
| Supplier Device Package | 64-LQFP (10x10) |
| Purchase URL | https://www.e-xfl.com/product-detail/microchip-technology/at89c5122d-rdvim |

## Pin Description

Table 2. Pin Description

| Port | VQFP64 | VQFP32 | PLCC68 | PLCC28 | QFN64 | QFN32 | Internal Power Supply | ESD | I/O | Reset Level | Alt | Reset Config | Conf 1 | Conf 2 | Conf 3 | Led |
|---|---|---|---|---|---|---|---|---|---|---|---|---|---|---|---|---|
| P0.0 | 30 | - | 41 | - | 30 | - | VCC | 2KV | I/O | Float | AD0 | P0 | | KB_OUT | Push-pull | |
| P0.1 | 29 | - | 40 | - | 29 | - | VCC | 2KV | I/O | Float | AD1 | P0 | | KB_OUT | Push-pull | |
| P0.2 | 28 | - | 39 | - | 28 | - | VCC | 2KV | I/O | Float | AD2 | P0 | | KB_OUT | Push-pull | |
| P0.3 | 27 | - | 38 | - | 27 | - | VCC | 2KV | I/O | Float | AD3 | P0 | | KB_OUT | Push-pull | |
| P0.4 | 25 | - | 36 | - | 25 | - | VCC | 2KV | I/O | Float | AD4 | P0 | | KB_OUT | Push-pull | |
| P0.5 | 24 | - | 35 | - | 24 | - | VCC | 2KV | I/O | Float | AD5 | P0 | | KB_OUT | Push-pull | |
| P0.6 | 23 | - | 34 | - | 23 | - | VCC | 2KV | I/O | Float | AD6 | P0 | | KB_OUT | Push-pull | |
| P0.7 | 22 | - | 33 | - | 22 | - | VCC | 2KV | I/O | Float | AD7 | P0 | | KB_OUT | Push-pull | |
| CIO | 64 | 32 | 9 | 4 | 64 | 32 | CVCC | 6KV | I/O | 0 | | Port51 | CVCC inactive at reset. ESD tested with a 10 F on CVCC An external pull-up of 10K is recommended to support ICC's with too weak internal pull-ups. | | | |
| CC4 | 3 | 3 | 12 | 7 | 3 | 3 | CVCC | 6KV | I/O | 0 | | Port51 | CVCC inactive at reset ESD tested with a 10 F on CVCC | | | |
| P1.2 | 2 | 2 | 11 | 6 | 2 | 2 | VCC | 2KV | I/O | 1 | CPRES | Port51 | Weak & medium pull-up can be disconnected | | | |
| CC4 | 9 | 5 | 18 | 9 | 9 | 5 | CVCC | 6KV | I/O | 0 | | Port51 | CVCC inactive at reset ESD tested with a 10 F on CVCC | | | |
| CCLK | 12 | 6 | 21 | 10 | 12 | 6 | CVCC | 6KV | O | 0 | | Push-pull | CVCC inactive at reset ESD tested with a 10 F on CVCC | | | |
| CRST | 6 | 4 | 15 | 8 | 6 | 4 | CVCC | 6KV | O | 0 | | Push-pull | CVCC inactive at reset ESD tested with a 10 F on CVCC | | | |
| P1.6 | 47 | 23 | 58 | - | 47 | 23 | VCC | 2KV | I/O | 1 | SS | Port51 | | | | |
| P1.7 | 62 | 31 | 7 | - | 62 | 31 | VCC | 2KV | I/O | 1 | CCLK1 | Port51 | | | | |
| P2.0 | 58 | - | 3 | - | 58 | - | VCC | 2KV | I/O | 1 | A8 | Port51 | Push-pull | KB_OUT | Input WPU | |
| P2.1 | 57 | - | 2 | - | 57 | - | VCC | 2KV | I/O | 1 | A9 | Port51 | Push-pull | KB_OUT | Input WPU | |
| P2.2 | 56 | - | 1 | - | 56 | - | VCC | 2KV | I/O | 1 | A10 | Port51 | Push-pull | KB_OUT | Input WPU | |
| P2.3 | 52 | - | 65 | - | 52 | - | VCC | 2KV | I/O | 1 | A11 | Port51 | Push-pull | KB_OUT | Input WPU | |
| P2.4 | 51 | - | 64 | - | 51 | - | VCC | 2KV | I/O | 1 | A12 | Port51 | Push-pull | KB_OUT | Input WPU | |
| P2.5 | 50 | - | 63 | - | 50 | - | VCC | 2KV | I/O | 1 | A13 | Port51 | Push-pull | KB_OUT | Input WPU | |

An access to external XRAM memory locations higher than the accessible size of the memory (roll-over feature) will be performed with the MOVX DPTR instructions, with P0 and P2 as data/address busses, $\overline{WR}$ and $\overline{RD}$ as respectively write and read signals. Accesses above XRAM size can only be done by the use of DPTR.

If EXTRAM=1 the MCU fetches the data from external XRAM Memory. There can be up to 64 KBytes of external XRAM Memory.

The hardware configuration for external Data Memory Access is shown in Figure 9

**Figure 9.** Accessing to External XRAM Memory

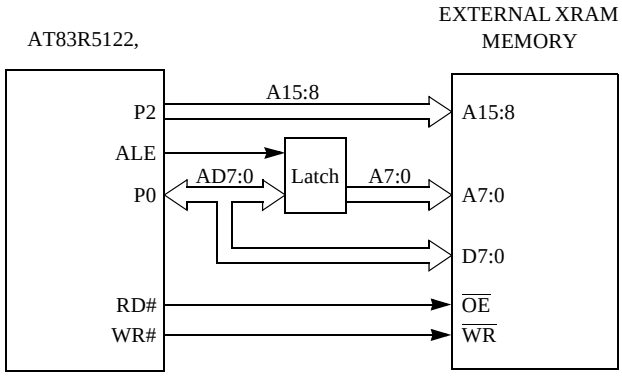


MOVX @Ri and MOVX @DPTR will be similar to the standard 80C51. MOVX @ Ri will provide an eight-bit address multiplexed with data on Port 0 and any output port pins can be used to output higher order address bits. This is to provide the external paging capability. MOVX @DPTR will generate a sixteen-bit address. Port 2 outputs the high-order eight address bits (DPH) while Port0 multiplexes the low-order eight address bits (DPL) with data. MOVX @ Ri and MOVX @DPTR will generate either read or write signals on $\overline{WR}$ and $\overline{RD}$.

Ports P0, P2 are not affected and RD, WR signals are not activated during access to internal XRAM.

Note that external XRAM Memory access is only available on High Pin Count Packages.

External Program Memory and external XRAM Memory may be combined if desired by applying the RD and PSEN signals to the inputs of an AND gate and using the ouput of the gate as the read strobe to the external program/data memory.

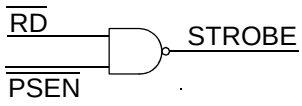


## Dual Data Pointer Register (DDPTR)

The additional data pointer can be used to speed up code execution and reduce code size.

The dual DPTR structure is a way by which the chip will specify the address of an external data memory location. There are two 16-bit DPTR registers that address the external memory, and a single bit called DPS = AUXR1.0 (see Table 7) that allow the program code to switch between them (Figure 10).