Welcome to E-XFL.COM

What is "Embedded - Microcontrollers"?

"Embedded - Microcontrollers" refer to small, integrated circuits designed to perform specific tasks within larger systems. These microcontrollers are essentially compact computers on a single chip, containing a processor core, memory, and programmable input/output peripherals. They are called "embedded" because they are embedded within electronic devices to control various functions, rather than serving as standalone computers. Microcontrollers are crucial in modern electronics, providing the intelligence and control needed for a wide range of applications.

Applications of "Embedded - Microcontrollers"

Details	
Product Status	Obsolete
Core Processor	80C51
Core Size	8-Bit
Speed	48MHz
Connectivity	SmartCard, SPI, UART/USART, USB
Peripherals	LED, POR, WDT
Number of I/O	14
Program Memory Size	32KB (32K x 8)
Program Memory Type	FLASH
EEPROM Size	-
RAM Size	768 x 8
Voltage - Supply (Vcc/Vdd)	3V ~ 5.5V
Data Converters	-
Oscillator Type	Internal
Operating Temperature	-40°C ~ 85°C (TA)
Mounting Type	Surface Mount
Package / Case	28-LCC (J-Lead)
Supplier Device Package	28-PLCC (11.51x11.51)
Purchase URL	https://www.e-xfl.com/product-detail/microchip-technology/at89c5122d-sisum

I_{CC} Current Test Conditions

Figure 110. Power Down Mode

All other pins are disconnected.

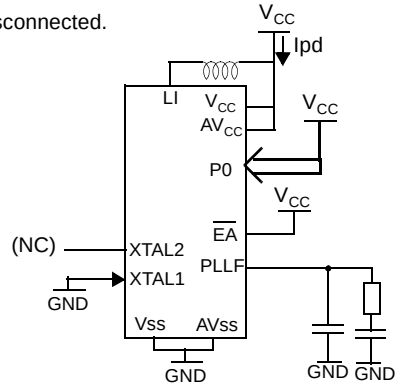

Figure 111. Active and Idle Mode

All other pins are disconnected.

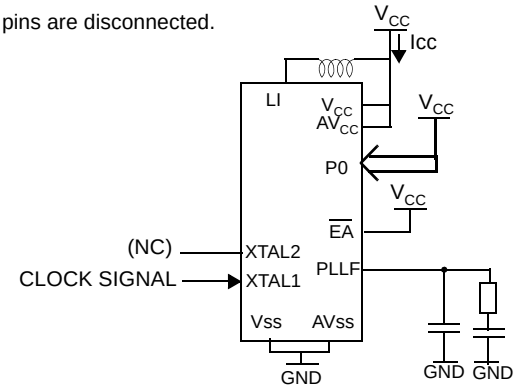

LED's

Symbol	Parameter	Min	Typ	Max	Unit	Test Conditions
I_{OL}	Output Low Current, P3.0 and P3.7 LED modes	1	3	5	mA	2 mA configuration
		2	6	8	mA	4 mA configuration
		5	10	20	mA	10 mA configuration

Note: 1. (T_A = -20°C to +50°C, V_{CC} - V_{OL} = 2 V)

Shift Register Timing Waveform

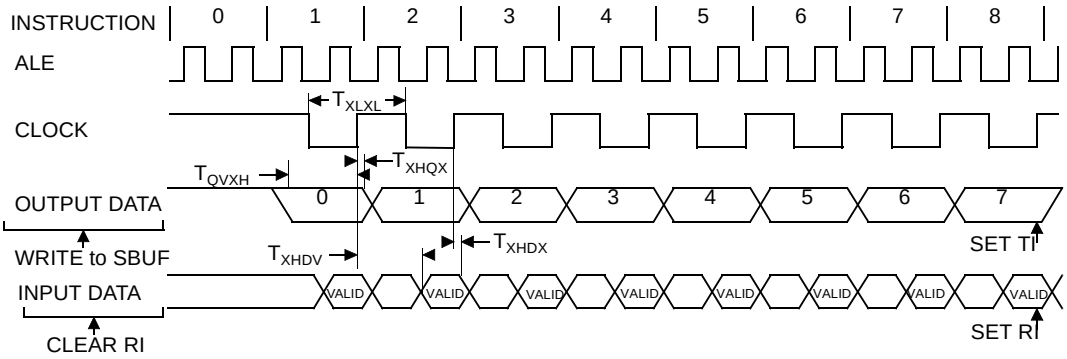

External Clock Drive Characteristics (XTAL1)

Table 120. AC Parameters

Symbol	Parameter	Min	Max	Units
T_{CLCL}	Oscillator Period	125		ns
T_{CHCX}	High Time	5		ns
T_{CLCX}	Low Time	5		ns
T_{CLCH}	Rise Time		5	ns
T_{CHCL}	Fall Time		5	ns
T_{CHCX}/T_{CLCX}	Cyclic ratio in X2 mode	40	60	%

External Clock Drive Waveforms

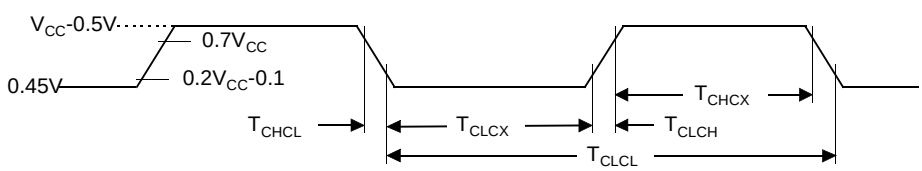

AC Testing Input/Output Waveforms

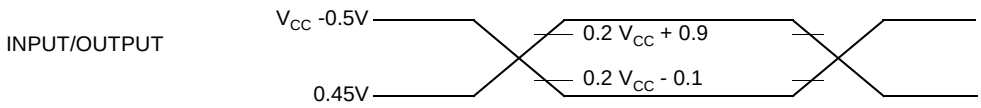

AC inputs during testing are driven at V_{CC} - 0.5 for a logic “1” and 0.45V for a logic “0”. Timing measurement are made at V_{IH} min for a logic “1” and V_{IL} max for a logic “0”.