Lattice Semiconductor Corporation - LFE5U-12F-8BG256C Datasheet

Welcome to E-XFL.COM

Understanding Embedded - FPGAs (Field Programmable Gate Array)

Embedded - FPGAs, or Field Programmable Gate Arrays, are advanced integrated circuits that offer unparalleled flexibility and performance for digital systems. Unlike traditional fixed-function logic devices, FPGAs can be programmed and reprogrammed to execute a wide array of logical operations, enabling customized functionality tailored to specific applications. This reprogrammability allows developers to iterate designs quickly and implement complex functions without the need for custom hardware.

Applications of Embedded - FPGAs

The versatility of Embedded - FPGAs makes them indispensable in numerous fields. In telecommunications.

Details	
Product Status	Active
Number of LABs/CLBs	3000
Number of Logic Elements/Cells	12000
Total RAM Bits	589824
Number of I/O	197
Number of Gates	-
Voltage - Supply	1.045V ~ 1.155V
Mounting Type	Surface Mount
Operating Temperature	0°C ~ 85°C (TJ)
Package / Case	256-LFBGA
Supplier Device Package	256-CABGA (14x14)
Purchase URL	https://www.e-xfl.com/product-detail/lattice-semiconductor/lfe5u-12f-8bg256c

3.1. Absolute Maximum Ratings 47
3.2. Recommended Operating Conditions 47
3.3. Power Supply Ramp Rates 48
3.4. Power-On-Reset Voltage Levels 48
3.5. Power up Sequence 48
3.6. Hot Socketing Specifications 48
3.7. Hot Socketing Requirements 49
3.8. ESD Performance 49
3.9. DC Electrical Characteristics 49
3.10. Supply Current (Standby) 50
3.11. SERDES Power Supply Requirements[1,2,3] 51
3.12. sysI/O Recommended Operating Conditions 53
3.13. sysI/O Single-Ended DC Electrical Characteristics 54
3.14. sysI/O Differential Electrical Characteristics 55
3.14.1. LVDS 55
3.14.2. SSTLD 55
3.14.3. LVCMOS33D 55
3.14.4. LVDS25E 56
3.14.5. BLVDS25 57
3.14.6. LVPECL33 58
3.14.7. MLVDS25 59
3.14.8. SLVS 60
3.15. Typical Building Block Function Performance 61
3.16. Derating Timing Tables 62
3.17. Maximum I/O Buffer Speed 63
3.18. External Switching Characteristics 64
3.19. sysCLOCK PLL Timing 71
3.20. SERDES High-Speed Data Transmitter 72
3.21. SERDES/PCS Block Latency 73
3.22. SERDES High-Speed Data Receiver 74
3.23. Input Data Jitter Tolerance 74
3.24. SERDES External Reference Clock 75
3.25. PCI Express Electrical and Timing Characteristics 76
3.25.1. PCIe (2.5 Gb/s) AC and DC Characteristics 76
3.25.2. PCIe (5 Gb/s) – Preliminary AC and DC Characteristics 77
3.26. CPRI LV2 E.48 Electrical and Timing Characteristics – Preliminary 79
3.27. XAUI/CPRI LV E.30 Electrical and Timing Characteristics 80
3.27.1. AC and DC Characteristics 80
3.28. CPRI LV E.24/SGMII(2.5Gbps) Electrical and Timing Characteristics 80
3.28.1. AC and DC Characteristics 80
3.29. Gigabit Ethernet/SGMII(1.25Gbps)/CPRI LV E.12 Electrical and Timing Characteristics 81
3.29.1. AC and DC Characteristics 81
3.30. SMPTE SD/HD-SDI/3G-SDI (Serial Digital Interface) Electrical and Timing Characteristics 82
3.30.1. AC and DC Characteristics 82
3.31. sysCONFIG Port Timing Specifications 83
3.32. JTAG Port Timing Specifications 88
3.33. Switching Test Conditions 89
4. Pinout Information 91
4.1. Signal Descriptions 91
4.2. PICs and DDR Data (DQ) Pins Associated with the DDR Strobe (DQS) Pin 94
4.3. Pin Information Summary 94
4.3.1. LFE5UM/LFE5UM5G 94
4.3.2. LFE5U 96
5. Ordering Information 97

© 2014-2018 Lattice Semiconductor Corp. All Lattice trademarks, registered trademarks, patents, and disclaimers are as listed at www.latticesemi.com/legal.
All other brand or product names are trademarks or registered trademarks of their respective holders. The specifications and information herein are subject to change without notice.

Figures

Figure 2.1. Simplified Block Diagram, LFE5UM/LFE5UM5G-85 Device (Top Level) 13
Figure 2.2. PFU Diagram 14
Figure 2.3. Slice Diagram 15
Figure 2.4. Connectivity Supporting LUT5, LUT6, LUT7, and LUT8 16
Figure 2.5. General Purpose PLL Diagram 18
Figure 2.6. LFE5UM/LFE5UM5G-85 Clocking 20
Figure 2.7. DCS Waveforms 21
Figure 2.8. Edge Clock Sources per Bank 22
Figure 2.9. ECP5/ECP5-5G Clock Divider Sources 22
Figure 2.10. DDRDLL Functional Diagram 23
Figure 2.11. ECP5/ECP5-5G DLL Top Level View (For LFE-45 and LFE-85) 24
Figure 2.12. Memory Core Reset 26
Figure 2.13. Comparison of General DSP and ECP5/ECP5-5G Approaches 27
Figure 2.14. Simplified sysDSP Slice Block Diagram 28
Figure 2.15. Detailed sysDSP Slice Diagram 29
Figure 2.16. Group of Four Programmable I/O Cells on Left/Right Sides 31
Figure 2.17. Input Register Block for PIO on Top Side of the Device 32
Figure 2.18. Input Register Block for PIO on Left and Right Side of the Device 32
Figure 2.19. Output Register Block on Top Side 33
Figure 2.20. Output Register Block on Left and Right Sides 34
Figure 2.21. Tristate Register Block on Top Side 34
Figure 2.22. Tristate Register Block on Left and Right Sides 35
Figure 2.23. DQS Grouping on the Left and Right Edges 36
Figure 2.24. DQS Control and Delay Block (DQSBUF) 37
Figure 2.25. ECP5/ECP5-5G Device Family Banks 38
Figure 2.26. On-Chip Termination 40
Figure 2.27. SERDES/PCS Duals (LFE5UM/LFE5UM5G-85) 42
Figure 2.28. Simplified Channel Block Diagram for SERDES/PCS Block 43
Figure 3.1. LVDS25E Output Termination Example 56
Figure 3.2. BLVDS25 Multi-point Output Example 57
Figure 3.3. Differential LVPECL33 58
Figure 3.4. MLVDS25 (Multipoint Low Voltage Differential Signaling) 59
Figure 3.5. SLVS Interface 60
Figure 3.6. Receiver RX.CLK.Centered Waveforms 68
Figure 3.7. Receiver RX.CLK.Aligned and DDR Memory Input Waveforms 68
Figure 3.8. Transmit TX.CLK.Centered and DDR Memory Output Waveforms 68
Figure 3.9. Transmit TX.CLK.Aligned Waveforms 69
Figure 3.10. DDRX71 Video Timing Waveforms 69
Figure 3.11. Receiver DDRX71_RX Waveforms 70
Figure 3.12. Transmitter DDRX71_TX Waveforms 70
Figure 3.13. Transmitter and Receiver Latency Block Diagram 73
Figure 3.14. SERDES External Reference Clock Waveforms 75
Figure 3.15. sysCONFIG Parallel Port Read Cycle 84
Figure 3.16. sysCONFIG Parallel Port Write Cycle 85
Figure 3.17. sysCONFIG Slave Serial Port Timing 85
Figure 3.18. Power-On-Reset (POR) Timing 86
Figure 3.19. sysCONFIG Port Timing 86
Figure 3.20. Configuration from PROGRAMN Timing 87
Figure 3.21. Wake-Up Timing 87
Figure 3.22. Master SPI Configuration Waveforms 88
Figure 3.23. JTAG Port Timing Waveforms 89
Figure 3.24. Output Test Load, LVTTL and LVCMOS Standards 89

© 2014-2018 Lattice Semiconductor Corp. All Lattice trademarks, registered trademarks, patents, and disclaimers are as listed at www.latticesemi.com/legal.
All other brand or product names are trademarks or registered trademarks of their respective holders. The specifications and information herein are subject to change without notice.

Table 3.36. Receive and Jitter Tolerance 81
Table 3.37. Transmit 81
Table 3.38. Receive and Jitter Tolerance 81
Table 3.39. Transmit 82
Table 3.40. Receive 82
Table 3.41. Reference Clock 82
Table 3.42. ECP5/ECP5-5G sysCONFIG Port Timing Specifications 83
Table 3.43. JTAG Port Timing Specifications 88
Table 3.44. Test Fixture Required Components, Non-Terminated Interfaces 90

© 2014-2018 Lattice Semiconductor Corp. All Lattice trademarks, registered trademarks, patents, and disclaimers are as listed at www.latticesemi.com/legal.
All other brand or product names are trademarks or registered trademarks of their respective holders. The specifications and information herein are subject to change without notice.

  - Four DLLs and four PLLs in LFE5-45 and LFE5-85; two DLLs and two PLLs in LFE5-25 and LFE5-12
- Pre-Engineered Source Synchronous I/O
  - DDR registers in I/O cells
  - Dedicated read/write levelling functionality
  - Dedicated gearing logic
  - Source synchronous standards support
    - ADC/DAC, 7:1 LVDS, XGMII
    - High Speed ADC/DAC devices
  - Dedicated DDR2/DDR3 and LPDDR2/LPDDR3 memory support with DQS logic, up to 800 Mb/s data-rate
- Programmable sysI/O™ Buffer Supports Wide Range of Interfaces
  - On-chip termination
  - LVTTL and LVCMOS 33/25/18/15/12
  - SSTL 18/15 I, II
  - HSUL12
  - LVDS, Bus-LVDS, LVPECL, RSDS, MLVDS
  - subLVDS and SLVS, MIPI D-PHY input interfaces
- Flexible Device Configuration
  - Shared bank for configuration I/Os
  - SPI boot flash interface
  - Dual-boot images supported
  - Slave SPI
  - TransFR™ I/O for simple field updates
- Single Event Upset (SEU) Mitigation Support
  - Soft Error Detect – Embedded hard macro
  - Soft Error Correction – Without stopping user operation
  - Soft Error Injection – Emulate SEU event to debug system error handling
- System Level Support
  - IEEE 1149.1 and IEEE 1532 compliant
  - Reveal Logic Analyzer
  - On-chip oscillator for initialization and general use
  - 1.1 V core power supply for ECP5, 1.2 V core power supply for ECP5UM5G

Table 1.1. ECP5 and ECP5-5G Family Selection Guide

Device	LFE5UM-25 LFE5UM5G-25	LFE5UM-45 LFE5UM5G-45	LFE5UM-85 LFE5UM5G-85	LFE5U-12	LFE5U-25	LFE5U-45	LFE5U-85
LUTs (K)	24	44	84	12	24	44	84
sysMEM Blocks (18 Kb)	56	108	208	32	56	108	208
Embedded Memory (Kb)	1,008	1944	3744	576	1,008	1944	3744
Distributed RAM Bits (Kb)	194	351	669	97	194	351	669
18 X 18 Multipliers	28	72	156	28	28	72	156
SERDES (Dual/Channels)	1/2	2/4	2/4	0	0	0	0
PLLs/DLLs	2/2	4/4	4/4	2/2	2/2	4/4	4/4
Packages (SERDES Channels / IO Count)							
256 caBGA (14 x 14 mm², 0.8 mm)	—	—	—	0/197	0/197	0/197	—
285 csfBGA (10 x 10 mm², 0.5 mm)	2/118	2/118	2/118	0/118	0/118	0/118	0/118
381 caBGA (17 x 17 mm², 0.8 mm)	2/197	4/203	4/205	0/197	0/197	0/203	0/205
554 caBGA (23 x 23 mm², 0.8 mm)	—	4/245	4/259	—	—	0/245	0/259
756 caBGA (27 x 27 mm², 0.8 mm)	—	—	4/365	—	—	—	0/365

© 2014-2018 Lattice Semiconductor Corp. All Lattice trademarks, registered trademarks, patents, and disclaimers are as listed at www.latticesemi.com/legal.
All other brand or product names are trademarks or registered trademarks of their respective holders. The specifications and information herein are subject to change without notice.

2.2.2. Modes of Operation

Slices 0-2 have up to four potential modes of operation: Logic, Ripple, RAM and ROM. Slice 3 is not needed for RAM mode, it can be used in Logic, Ripple, or ROM modes.

Logic Mode

In this mode, the LUTs in each slice are configured as 4-input combinatorial lookup tables. A LUT4 can have 16 possible input combinations. Any four input logic functions can be generated by programming this lookup table. Since there are two LUT4s per slice, a LUT5 can be constructed within one slice. Larger look-up tables such as LUT6, LUT7 and LUT8 can be constructed by concatenating other slices. Note that LUT8 requires more than four slices.

Ripple Mode

Ripple mode supports the efficient implementation of small arithmetic functions. In ripple mode, the following functions can be implemented by each slice:

- Addition 2-bit
- Subtraction 2-bit
- Add/Subtract 2-bit using dynamic control
- Up counter 2-bit
- Down counter 2-bit
- Up/Down counter with asynchronous clear
- Up/Down counter with preload (sync)
- Ripple mode multiplier building block
- Multiplier support
- Comparator functions of A and B inputs
    - A greater-than-or-equal-to B
    - A not-equal-to B
    - A less-than-or-equal-to B

Ripple Mode includes an optional configuration that performs arithmetic using fast carry chain methods. In this configuration (also referred to as CCU2 mode) two additional signals, Carry Generate and Carry Propagate, are generated on a per slice basis to allow fast arithmetic functions to be constructed by concatenating Slices.

RAM Mode

In this mode, a 16x4-bit distributed single port RAM (SPR) can be constructed in one PFU using each LUT block in Slice 0 and Slice 1 as a 16 x 2-bit memory in each slice. Slice 2 is used to provide memory address and control signals.
A 16 x 2-bit pseudo dual port RAM (PDPR) memory is created in one PFU by using one Slice as the read-write port and the other companion slice as the read-only port. The slice with the read-write port updates the SRAM data contents in both slices at the same write cycle.

ECP5/ECP5-5G devices support distributed memory initialization.

The Lattice design tools support the creation of a variety of different size memories. Where appropriate, the software will construct these using distributed memory primitives that represent the capabilities of the PFU. Table 2.3 lists the number of slices required to implement different distributed RAM primitives. For more information about using RAM in ECP5/ECP5-5G devices, refer to ECP5 and ECP5-5G Memory Usage Guide (TN1264).

Table 2.3. Number of Slices Required to Implement Distributed RAM

	SPR 16 X 4	PDPR 16 X 4
Number of slices	3	6

Note: SPR = Single Port RAM, PDPR = Pseudo Dual Port RAM

ROM Mode

ROM mode uses the LUT logic; hence, Slices 0 through 3 can be used in ROM mode. Preloading is accomplished through the programming interface during PFU configuration.

For more information, refer to ECP5 and ECP5-5G Memory Usage Guide (TN1264).

© 2014-2018 Lattice Semiconductor Corp. All Lattice trademarks, registered trademarks, patents, and disclaimers are as listed at www.latticesemi.com/legal.
All other brand or product names are trademarks or registered trademarks of their respective holders. The specifications and information herein are subject to change without notice.

2.3. Routing

There are many resources provided in the ECP5/ECP5-5G devices to route signals individually or as busses with related control signals. The routing resources consist of switching circuitry, buffers and metal interconnect (routing) segments.

The ECP5/ECP5-5G family has an enhanced routing architecture that produces a compact design. The Diamond design software tool suites take the output of the synthesis tool and places and routes the design.

2.4. Clocking Structure

ECP5/ECP5-5G clocking structure consists of clock synthesis blocks (sysCLOCK PLL); balanced clock tree networks (PCLK and ECLK trees); and efficient clock logic modules (CLOCK DIVIDER and Dynamic Clock Select (DCS), Dynamic Clock Control (DCC) and DLL). All of these functions are described below.

2.4.1. sysCLOCK PLL

The sysCLOCK PLLs provide the ability to synthesize clock frequencies. The devices in the ECP5/ECP5-5G family support two to four full-featured General Purpose PLLs. The sysCLOCK PLLs provide the ability to synthesize clock frequencies.

The architecture of the PLL is shown in Figure 2.5. A description of the PLL functionality follows.

CLKI is the reference frequency input to the PLL and its source can come from two different external CLK inputs or from internal routing. A non-glitchless 2-to-1 input multiplexor is provided to dynamically select between two different external reference clock sources. The CLKI input feeds into the input Clock Divider block.

CLKFB is the feedback signal to the PLL which can come from internal feedback path, routing or an external I/O pin. The feedback divider is used to multiply the reference frequency and thus synthesize a higher frequency clock output.

The PLL has four clock outputs CLKOP, CLKOS, CLKOS2 and CLKOS3. Each output has its own output divider, thus allowing the PLL to generate different frequencies for each output. The output dividers can have a value from 1 to 128. The CLKOP, CLKOS, CLKOS2, and CLKOS3 outputs can all be used to drive the primary clock network. Only CLKOP and CLKOS outputs can go to the edge clock network.

The setup and hold times of the device can be improved by programming a phase shift into the CLKOS, CLKOS2, and CLKOS3 output clocks which will advance or delay the output clock with reference to the CLKOP output clock. This phase shift can be either programmed during configuration or can be adjusted dynamically using the PHASESEL, PHASEDIR, PHASESTEP, and PHASELOADREG ports.

The LOCK signal is asserted when the PLL determines it has achieved lock and de-asserted if a loss of lock is detected.

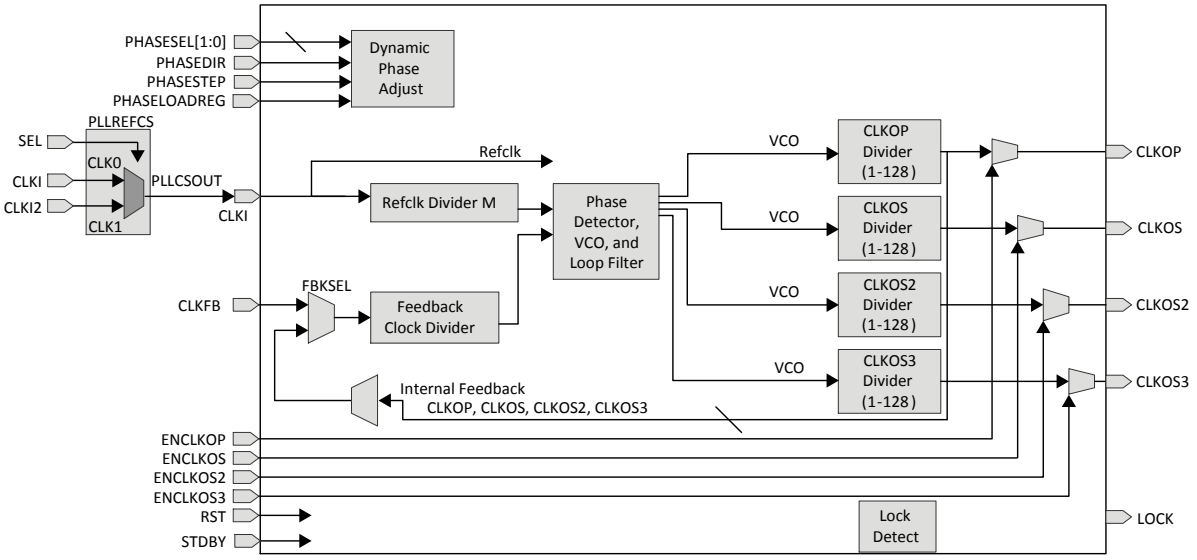

Figure 2.5. General Purpose PLL Diagram

© 2014-2018 Lattice Semiconductor Corp. All Lattice trademarks, registered trademarks, patents, and disclaimers are as listed at www.latticesemi.com/legal.
All other brand or product names are trademarks or registered trademarks of their respective holders. The specifications and information herein are subject to change without notice.

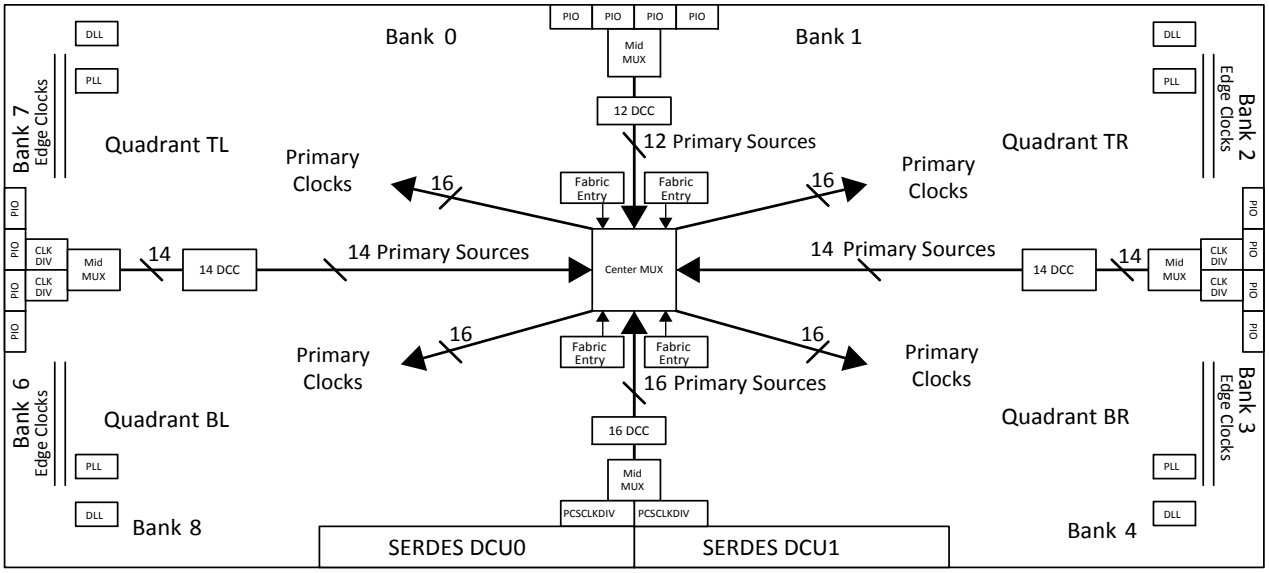

Figure 2.6. LFE5UM/LFE5UM5G-85 Clocking

2.5.1. Primary Clocks

The ECP5/ECP5-5G device family provides low-skew, high fan-out clock distribution to all synchronous elements in the FPGA fabric through the Primary Clock Network.

The primary clock network is divided into four clocking quadrants: Top Left (TL), Bottom Left (BL), Top Right (TR), and Bottom Right (BR). Each of these quadrants has 16 clocks that can be distributed to the fabric in the quadrant.

The Lattice Diamond software can automatically route each clock to one of the four quadrants up to a maximum of 16 clocks per quadrant. The user can change how the clocks are routed by specifying a preference in the Lattice Diamond software to locate the clock to specific. The ECP5/ECP5-5G device provides the user with a maximum of 64 unique clock input sources that can be routed to the primary Clock network.

Primary clock sources are:

- Dedicated clock input pins
- PLL outputs
- CLKDIV outputs
- Internal FPGA fabric entries (with minimum general routing)
- SERDES/PCS/PCSDIV clocks
- OSC clock

These sources are routed to one of four clock switches called a Mid Mux. The outputs of the Mid MUX are routed to the center of the FPGA where another clock switch, called the Center MUX, is used to route the primary clock sources to primary clock distribution to the ECP5/ECP5-5G fabric. These routing muxes are shown in Figure 2.6. Since there is a maximum of 60 unique clock input sources to the clocking quadrants, there are potentially 64 unique clock domains that can be used in the ECP5/ECP5-5G Device. For more information about the primary clock tree and connections, refer to ECP5 and ECP5-5G sysClock PLL/DLL Design and Usage Guide (TN1263).

2.5.1.1. Dynamic Clock Control

The Dynamic Clock Control (DCC), Quadrant Clock enable/disable feature allows internal logic control of the quadrant primary clock network. When a clock network is disabled, the clock signal is static and not toggle. All the logic fed by that clock will not toggle, reducing the overall power consumption of the device. The disable function will not create glitch and increase the clock latency to the primary clock network.

This DCC controls the clock sources from the Primary CLOCK MIDMUX before they are fed to the Primary Center MUXs that drive the quadrant clock network. For more information about the DCC, refer to ECP5 and ECP5-5G sysClock PLL/DLL Design and Usage Guide (TN1263).

© 2014-2018 Lattice Semiconductor Corp. All Lattice trademarks, registered trademarks, patents, and disclaimers are as listed at www.latticesemi.com/legal.
All other brand or product names are trademarks or registered trademarks of their respective holders. The specifications and information herein are subject to change without notice.

Table 2.6. sysMEM Block Configurations

Memory Mode	Configurations
Single Port	16,384 x 1 8,192 x 2 4,096 x 4 2,048 x 9 1,024 x 18 512 x 36
True Dual Port	16,384 x 1 8,192 x 2 4,096 x 4 2,048 x 9 1,024 x 18
Pseudo Dual Port	16,384 x 1 8,192 x 2 4,096 x 4 2,048 x 9 1,024 x 18 512 x 36

2.8.2. Bus Size Matching

All of the multi-port memory modes support different widths on each of the ports. The RAM bits are mapped LSB word 0 to MSB word 0, LSB word 1 to MSB word 1, and so on. Although the word size and number of words for each port varies, this mapping scheme applies to each port.

2.8.3. RAM Initialization and ROM Operation

If desired, the contents of the RAM can be pre-loaded during device configuration. By preloading the RAM block during the chip configuration cycle and disabling the write controls, the sysMEM block can also be utilized as a ROM.

2.8.4. Memory Cascading

Larger and deeper blocks of RAM can be created using EBR sysMEM Blocks. Typically, the Lattice design tools cascade memory transparently, based on specific design inputs.

2.8.5. Single, Dual and Pseudo-Dual Port Modes

In all the sysMEM RAM modes the input data and address for the ports are registered at the input of the memory array. The output data of the memory is optionally registered at the output.

EBR memory supports the following forms of write behavior for single port or dual port operation:

- **Normal** – Data on the output appears only during a read cycle. During a write cycle, the data (at the current address) does not appear on the output. This mode is supported for all data widths.
- **Write Through** – A copy of the input data appears at the output of the same port during a write cycle. This mode is supported for all data widths.
- **Read-Before-Write** – When new data is written, the old content of the address appears at the output. This mode is supported for x9, x18, and x36 data widths.

© 2014-2018 Lattice Semiconductor Corp. All Lattice trademarks, registered trademarks, patents, and disclaimers are as listed at www.latticesemi.com/legal.
All other brand or product names are trademarks or registered trademarks of their respective holders. The specifications and information herein are subject to change without notice.

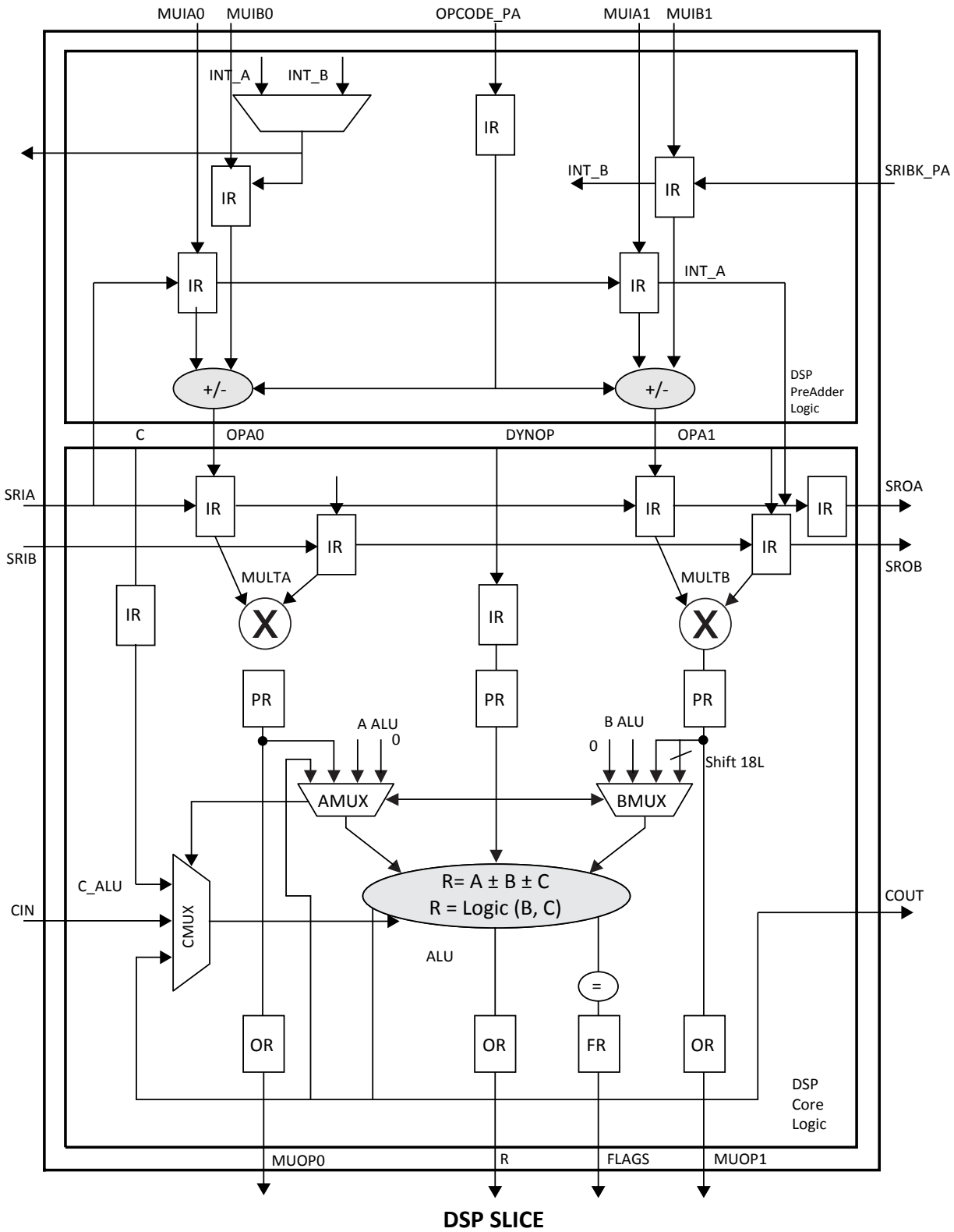

Figure 2.15. Detailed sysDSP Slice Diagram

© 2014-2018 Lattice Semiconductor Corp. All Lattice trademarks, registered trademarks, patents, and disclaimers are as listed at www.latticesemi.com/legal.
All other brand or product names are trademarks or registered trademarks of their respective holders. The specifications and information herein are subject to change without notice.

2.11.1.1. Input FIFO

The ECP5/ECP5-5G PIO has dedicated input FIFO per single-ended pin for input data register for DDR Memory interfaces. The FIFO resides before the gearing logic. It transfers data from DQS domain to continuous ECLK domain. On the Write side of the FIFO, it is clocked by DQS clock which is the delayed version of the DQS Strobe signal from DDR memory. On the Read side of FIFO, it is clocked by ECLK. ECLK may be any high speed clock with identical frequency as DQS (the frequency of the memory chip). Each DQS group has one FIFO control block. It distributes FIFO read/write pointer to every PIC in same DQS group. DQS Grouping and DQS Control Block is described in DDR Memory Support section on page 35.

Table 2.8. Input Block Port Description

Name	Type	Description
D	Input	High Speed Data Input
Q[1:0]/Q[3:0]/Q[6:0]	Output	Low Speed Data to the device core
RST	Input	Reset to the Output Block
SCLK	Input	Slow Speed System Clock
ECLK	Input	High Speed Edge Clock
DQS	Input	Clock from DQS control Block used to clock DDR memory data
ALIGNWD	Input	Data Alignment signal from device core.

2.11.2. Output Register Block

The output register block registers signal from the core of the device before they are passed to the sysIO buffers.

ECP5/ECP5-5G output data path has output programmable flip flops and output gearing logic. On the left and right sides, the output register block can support 1x, 2x and 7:1 gearing enabling high speed DDR interfaces and DDR memory interfaces. On the top side, the banks support 1x gearing. ECP5/ECP5-5G output data path diagram is shown in Figure 2.19. The programmable delay cells are also available in the output data path.

For detailed description of the output register block modes and usage, refer to ECP5 and ECP5-5G High-Speed I/O Interface (TN1265).

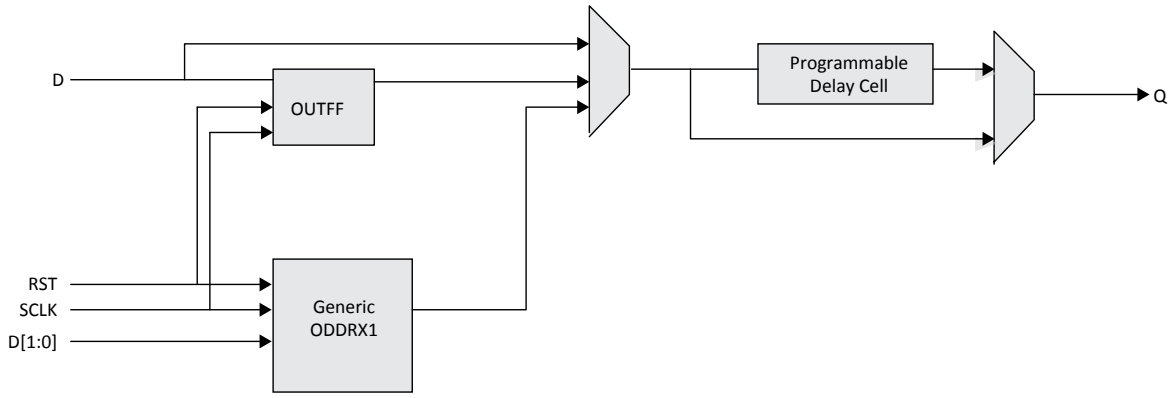

Figure 2.19. Output Register Block on Top Side

© 2014-2018 Lattice Semiconductor Corp. All Lattice trademarks, registered trademarks, patents, and disclaimers are as listed at www.latticesemi.com/legal.
All other brand or product names are trademarks or registered trademarks of their respective holders. The specifications and information herein are subject to change without notice.

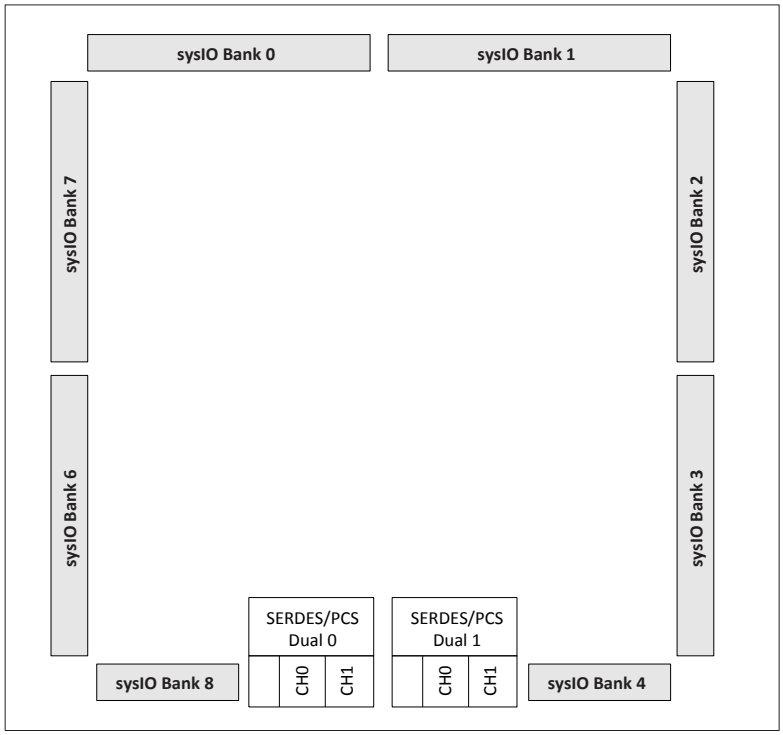

Figure 2.27. SERDES/PCS Duals (LFE5UM/LFE5UM5G-85)

Table 2.13. LFE5UM/LFE5UM5G SERDES Standard Support

Standard	Data Rate (Mb/s)	Number of General/Link Width	Encoding Style
PCI Express 1.1 and 2.0	2500	x1, x2, x4	8b10b
2.02	5000 [2]	x1, x2	8b10b
Gigabit Ethernet	1250	x1	8b10b
SGMII	1250	x1	8b10b
	2500	x1	8b10b
XAUI	3125	x4	8b10b
CPRI-1 CPRI-2 CPRI-3 CPRI-4 CPRI-5	614.4 1228.8 2457.6 3072.0 4915.2 [2]	x1	8b10b
SD-SDI (259M, 344M) [1]	270	x1	NRZI/Scrambled
HD-SDI (292M)	1483.5 1485	x1	NRZI/Scrambled
3G-SDI (424M)	2967 2970	x1	NRZI/Scrambled
	5000	—	—
JESD204A/B	3125	x1	8b/10b

Notes:
1. For SD-SDI rate, the SERDES is bypassed and SERDES input signals are directly connected to the FPGA routing.
2. For ECP5-5G family devices only.

© 2014-2018 Lattice Semiconductor Corp. All Lattice trademarks, registered trademarks, patents, and disclaimers are as listed at www.latticesemi.com/legal.
All other brand or product names are trademarks or registered trademarks of their respective holders. The specifications and information herein are subject to change without notice.

2.15.3. SERDES Client Interface Bus

The SERDES Client Interface (SCI) is an IP interface that allows the user to change the configuration thru this interface. This is useful when the user needs to fine-tune some settings, such as input and output buffer that need to be optimized based on the channel characteristics. It is a simple register configuration interface that allows SERDES/PCS configuration without power cycling the device.

The Diamond design tools support all modes of the PCS. Most modes are dedicated to applications associated with a specific industry standard data protocol. Other more general purpose modes allow users to define their own operation. With these tools, the user can define the mode for each dual in a design.

Popular standards such as 10 Gb Ethernet, x4 PCI Express and 4x Serial RapidIO can be implemented using IP (available through Lattice), with two duals (Four SERDES channels and PCS) and some additional logic from the core.

The LFE5UM/LFE5UM5G devices support a wide range of protocols. Within the same dual, the LFE5UM/ LFE5UM5G devices support mixed protocols with semi-independent clocking as long as the required clock frequencies are integer x1, x2, or x11 multiples of each other. Table 2.15 lists the allowable combination of primary and secondary protocol combinations.

2.16. Flexible Dual SERDES Architecture

The LFE5UM/LFE5UM5G SERDES architecture is a dual channel-based architecture. For most SERDES settings and standards, the whole dual (consisting of two SERDES channels) is treated as a unit. This helps in silicon area savings, better utilization, higher granularity on clock/SERDES channel and overall lower cost.

However, for some specific standards, the LFE5UM/LFE5UM5G dual-channel architecture provides flexibility; more than one standard can be supported within the same dual.

Table 2.15 lists the standards that can be mixed and matched within the same dual. In general, the SERDES standards whose nominal data rates are either the same or a defined subset of each other, can be supported within the same dual. The two Protocol columns of the table define the different combinations of protocols that can be implemented together within a Dual.

Table 2.15. LFE5UM/LFE5UM5G Mixed Protocol Support

Protocol		Protocol
PCI Express 1.1	with	SGMII
PCI Express 1.1	with	Gigabit Ethernet
CPRI-3	with	CPRI-2 and CPRI-1
3G-SDI	with	HD-SDI and SD-SDI

There are some restrictions to be aware of when using spread spectrum clocking. When a dual shares a PCI Express x1 channel with a non-PCI Express channel, ensure that the reference clock for the dual is compatible with all protocols within the dual. For example, a PCI Express spread spectrum reference clock is not compatible with most Gigabit Ethernet applications because of tight CTC ppm requirements.

While the LFE5UM/LFE5UM5G architecture will allow the mixing of a PCI Express channel and a Gigabit Ethernet, or SGMII channel within the same dual, using a PCI Express spread spectrum clocking as the transmit reference clock will cause a violation of the Gigabit Ethernet, and SGMII transmit jitter specifications.

For further information on SERDES, refer to ECP5 and ECP5-5G SERDES/PCS Usage Guide (TN1261).

2.17. IEEE 1149.1-Compliant Boundary Scan Testability

All ECP5/ECP5-5G devices have boundary scan cells that are accessed through an IEEE 1149.1 compliant Test Access Port (TAP). This allows functional testing of the circuit board on which the device is mounted through a serial scan path that can access all critical logic nodes. Internal registers are linked internally, allowing test data to be shifted in and loaded directly onto test nodes, or test data to be captured and shifted out for verification. The test access port consists of dedicated I/Os: TDI, TDO, TCK and TMS. The test access port uses VCCIO8 for power supply.

For more information, refer to ECP5 and ECP5-5G sysCONFIG Usage Guide (TN1260).

© 2014-2018 Lattice Semiconductor Corp. All Lattice trademarks, registered trademarks, patents, and disclaimers are as listed at www.latticesemi.com/legal.
All other brand or product names are trademarks or registered trademarks of their respective holders. The specifications and information herein are subject to change without notice.

3.14.8. SLVS

Scalable Low-Voltage Signaling (SLVS) is based on a point-to-point signaling method defined in the JEDEC JESD8-13 (SLVS-400) standard. This standard evolved from the traditional LVDS standard and relies on the advantage of its use of smaller voltage swings and a lower common-mode voltage. The 200 mV (400 mV p-p) SLVS swing contributes to a reduction in power.

The ECP5/ECP5-5G devices can receive differential input up to 800 Mb/s with its LVDS input buffer. This LVDS input buffer is used to meet the SLVS input standard specified by the JEDEC standard. The SLVS output parameters are compared to ECP5/ECP5-5G LVDS input parameters, as listed in Table 3.18.

Table 3.18. Input to SLVS

Parameter	ECP5/ECP5-5G LVDS Input	SLVS Output	Unit
Vcm (min)	50	150	mV
Vcm (max)	2350	250	mV
Differential Voltage (min)	100	140	mV
Differential Voltage (max)	—	270	mV

ECP5/ECP5-5G does not support SLVS output. However, SLVS output can be created using ECP5/ECP5-5G LVDS outputs by level shift to meet the low Vcm/Vod levels required by SLVS. Figure 3.5 shows how the LVDS output can be shifted external to meet SLVS levels.

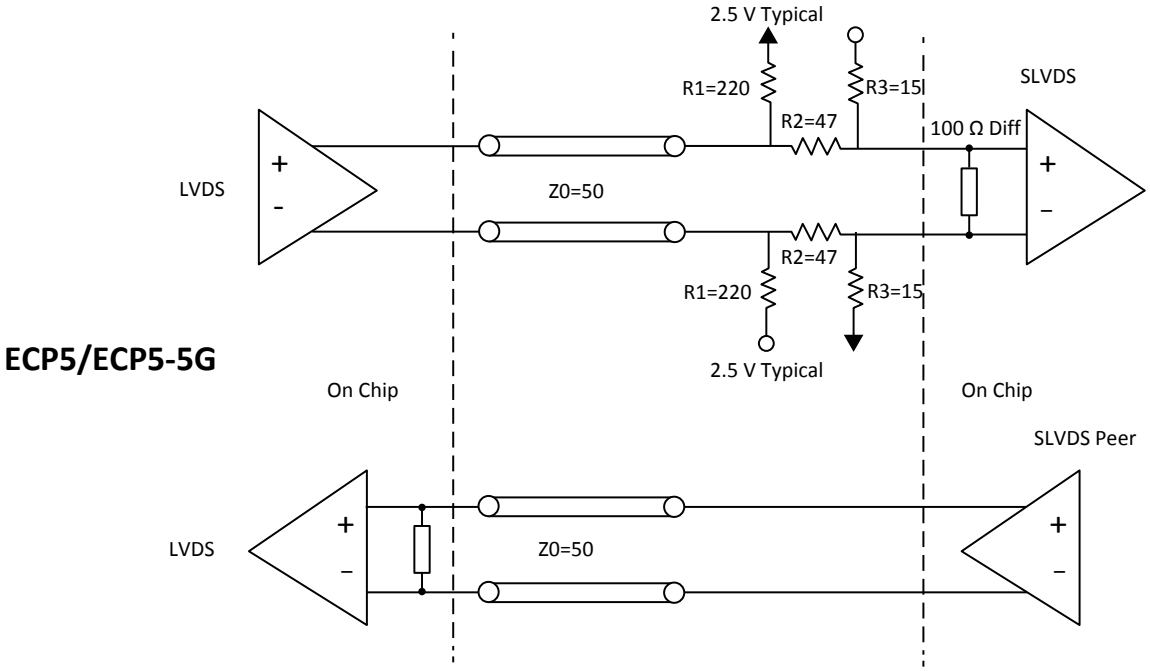

Figure 3.5. SLVS Interface

© 2014-2018 Lattice Semiconductor Corp. All Lattice trademarks, registered trademarks, patents, and disclaimers are as listed at www.latticesemi.com/legal.
All other brand or product names are trademarks or registered trademarks of their respective holders. The specifications and information herein are subject to change without notice.

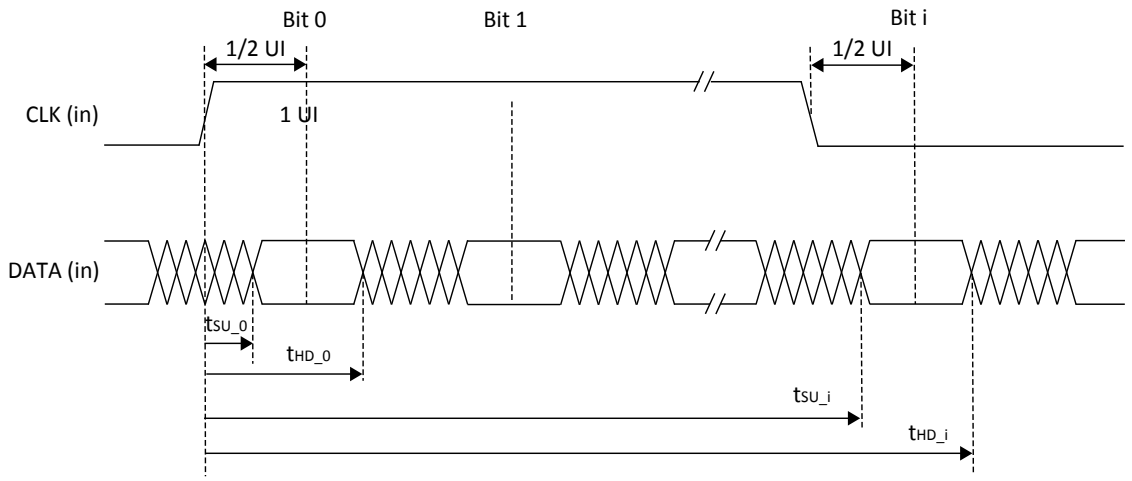

Figure 3.11. Receiver DDRX71_RX Waveforms

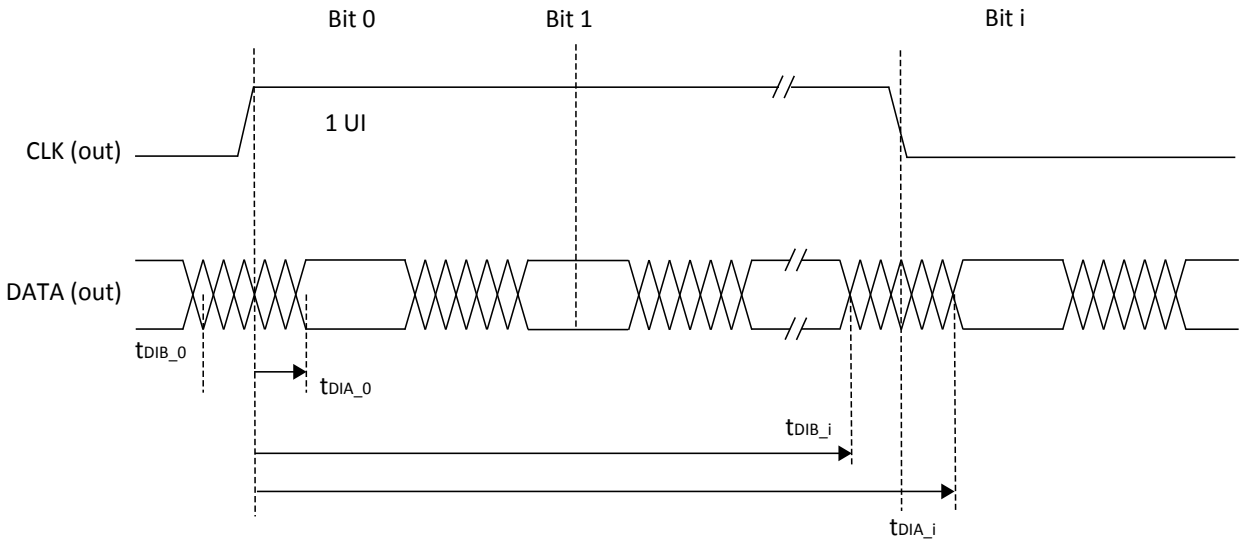

Figure 3.12. Transmitter DDRX71_TX Waveforms

© 2014-2018 Lattice Semiconductor Corp. All Lattice trademarks, registered trademarks, patents, and disclaimers are as listed at www.latticesemi.com/legal.
All other brand or product names are trademarks or registered trademarks of their respective holders. The specifications and information herein are subject to change without notice.

3.24. SERDES External Reference Clock

The external reference clock selection and its interface are a critical part of system applications for this product. Table 3.29 specifies reference clock requirements, over the full range of operating conditions.

Table 3.29. External Reference Clock Specification (refclkp/refclkn)

Symbol	Description	Min	Typ	Max	Unit
F_{REF}	Frequency range	50	—	320	MHz
$F_{REF-PPM}$	Frequency tolerance[1]	–1000	—	1000	ppm
$V_{REF-IN-SE}$	Input swing, single-ended clock[2, 4]	200	—	V_{CCAUXA}	mV, p-p
$V_{REF-IN-DIFF}$	Input swing, differential clock	200	—	$2*V_{CCAUXA}$	mV, p-p differential
V_{REF-IN}	Input levels	0	—	V_{CCAUXA} + 0.4	V
D_{REF}	Duty cycle[3]	40	—	60	%
T_{REF-R}	Rise time (20% to 80%)	200	500	1000	ps
T_{REF-F}	Fall time (80% to 20%)	200	500	1000	ps
$Z_{REF-IN-TERM-DIFF}$	Differential input termination	–30%	100/HiZ	+30%	Ω
$C_{REF-IN-CAP}$	Input capacitance	—	—	7	pF

Notes:

1. Depending on the application, the PLL_LOL_SET and CDR_LOL_SET control registers may be adjusted for other tolerance values as described in ECP5 and ECP5-5G SERDES/PCS Usage Guide (TN1261).
2. The signal swing for a single-ended input clock must be as large as the p-p differential swing of a differential input clock to get the same gain at the input receiver. With single-ended clock, a reference voltage needs to be externally connected to CLKREFN pin, and the input voltage needs to be swung around this reference voltage.
3. Measured at 50% amplitude.
4. Single-ended clocking is achieved by applying a reference voltage V_{REF} on REFCLKN input, with the clock applied to REFCLKP input pin. V_{REF} should be set to mid-point of the REFCLKP voltage swing.

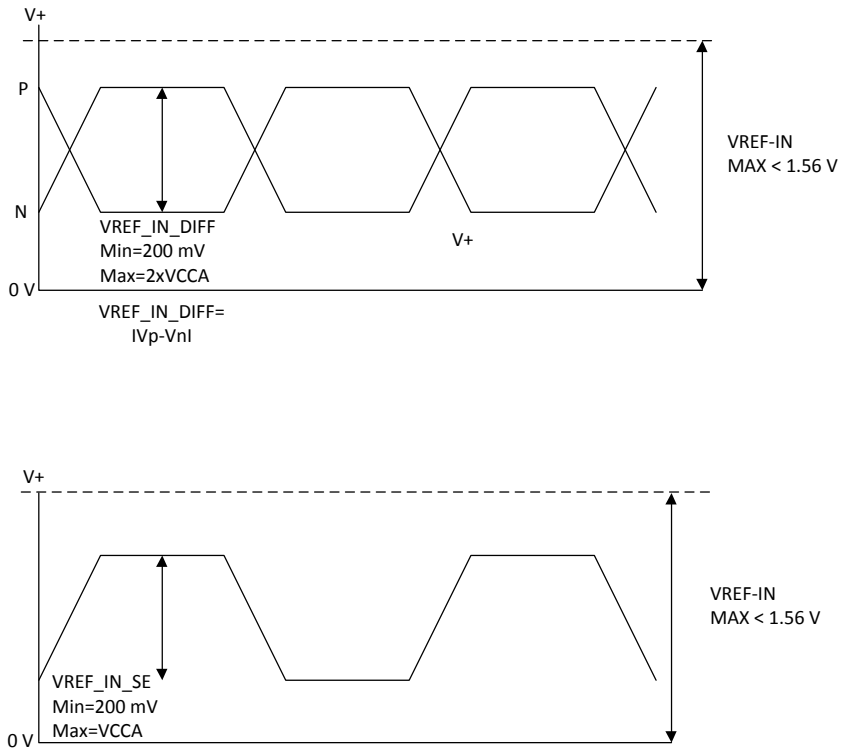

Figure 3.14. SERDES External Reference Clock Waveforms

© 2014-2018 Lattice Semiconductor Corp. All Lattice trademarks, registered trademarks, patents, and disclaimers are as listed at www.latticesemi.com/legal.
All other brand or product names are trademarks or registered trademarks of their respective holders. The specifications and information herein are subject to change without notice.

Table 3.44. Test Fixture Required Components, Non-Terminated Interfaces

Test Condition	R_1	R_2	C_L	Timing Ref.	V_T
LVTTL and other LVCMOS settings (L ≥ H, H ≥ L)	∞	∞	0 pF	LVCMOS 3.3 = 1.5 V	—
				LVCMOS 2.5 = $V_{CCIO}/2$	—
				LVCMOS 1.8 = $V_{CCIO}/2$	—
				LVCMOS 1.5 = $V_{CCIO}/2$	—
				LVCMOS 1.2 = $V_{CCIO}/2$	—
LVCMOS 2.5 I/O (Z ≥ H)	∞	1 MΩ	0 pF	$V_{CCIO}/2$	—
LVCMOS 2.5 I/O (Z ≥ L)	1 MΩ	∞	0 pF	$V_{CCIO}/2$	V_{CCIO}
LVCMOS 2.5 I/O (H ≥ Z)	∞	100	0 pF	V_{OH} – 0.10	—
LVCMOS 2.5 I/O (L ≥ Z)	100	∞	0 pF	V_{OL} + 0.10	V_{CCIO}

Note: Output test conditions for all other interfaces are determined by the respective standards.

© 2014-2018 Lattice Semiconductor Corp. All Lattice trademarks, registered trademarks, patents, and disclaimers are as listed at www.latticesemi.com/legal.
All other brand or product names are trademarks or registered trademarks of their respective holders. The specifications and information herein are subject to change without notice.

4. Pinout Information

4.1. Signal Descriptions

Signal Name	I/O	Description
General Purpose		
P[L/R] [Group Number]_[A/B/C/D]	I/O	[L/R] indicates the L (Left), or R (Right) edge of the device. [Group Number] indicates the PIO [A/B/C/D] group. [A/B/C/D] indicates the PIO within the PIC to which the pad is connected. Some of these user-programmable pins are shared with special function pins. These pins, when not used as special purpose pins, can be programmed as I/Os for user logic. During configuration the user-programmable I/Os are tristated with an internal pull-down resistor enabled. If any pin is not used (or not bonded to a package pin), it is tristated and default to have pull-down enabled after configuration. PIO A and B are grouped as a pair, and PIO C and D are group as a pair. Each pair supports true LVDS differential input buffer. Only PIO A and B pair supports true LVDS differential output buffer. Each A/B and C/D pair supports programmable on/off differential input termination of 100 Ω.
P[T/B][Group Number]_[A/B]	I/O	[T/B] indicates the T (top) or B (bottom) edge of the device. [Group Number] indicates the PIO [A/B] group. [A/B] indicates the PIO within the PIC to which the pad is connected. Some of these user-programmable pins are shared with sysConfig pins. These pins, when not used as configuration pins, can be programmed as I/Os for user logic. During configuration, the pins not used in configuration are tristated with an internal pull-down resistor enabled. If any pin is not used (or not bonded to a package pin), it is tristated and default to have pull-down enabled after configuration. PIOs on top and bottom do not support differential input signaling or true LVDS output signaling, but it can support emulated differential output buffer. PIO A/B forms a pair of emulated differential output buffer.
GSRN	I	Global RESET signal (active low). Any I/O pin can be GSRN.
NC	—	No connect.
RESERVED	—	This pin is reserved and should not be connected to anything on the board.
GND	—	Ground. Dedicated pins.
V_{CC}	—	Power supply pins for core logic. Dedicated pins. V_{CC} = 1.1 V (ECP5), 1.2 V (ECP5UM5G)
V_{CCAUX}	—	Auxiliary power supply pin. This dedicated pin powers all the differential and referenced input buffers. V_{CCAUX} = 2.5 V.
V_{CCIOx}	—	Dedicated power supply pins for I/O bank x. V_{CCIO8} is used for configuration and JTAG.
VREF1_x	—	Reference supply pins for I/O bank x. Pre-determined shared pin in each bank are assigned as VREF1 input. When not used, they may be used as I/O pins.
PLL, DLL and Clock Functions		
[LOC][_GPLL[T, C]_IN	I	General Purpose PLL (GPLL) input pads: [LOC] = ULC, LLC, URC and LRC, T = true and C = complement. These pins are shared I/O pins. When not configured as GPLL input pads, they can be used as general purpose I/O pins.
GR_PCLK[Bank][num]	I	General Routing Signals in Banks 0, 1, 2, 3, 4, 6 and 7. There are two in each bank ([num] = 0, 1). Refer to ECP5 sysClock PLL/DLL Design and Usage Guide (TN1263). These pins are shared I/O pins. When not configured as GR pins, they can be used as general purpose I/O pins.
PCLK[T/C][Bank]_[num]	I/O	General Purpose Primary CLK pads: [T/C] = True/Complement, [Bank] = (0, 1, 2, 3, 6 and 7). There are two in each bank ([num] = 0, 1). These are shared I/ O pins. When not configured as PCLK pins, they can be used as general purpose I/O pins.

© 2014-2018 Lattice Semiconductor Corp. All Lattice trademarks, registered trademarks, patents, and disclaimers are as listed at www.latticesemi.com/legal.
All other brand or product names are trademarks or registered trademarks of their respective holders. The specifications and information herein are subject to change without notice.

Signal Name	I/O	Description
PLL, DLL and Clock Functions *(Continued)*		
[L/R]DQS[group_num]	I/O	DQS input/output pads: T (top), R (right), group_ num = ball number associated with DQS[T] pin.
[T/R]]DQ[group_num]	I/O	DQ input/output pads: T (top), R (right), group_ num = ball number associated with DQS[T] pin.
Test and Programming (Dedicated Pins)		
TMS	I	Test Mode Select input, used to control the 1149.1 state machine. Pull-up is enabled during configuration. This is a dedicated input pin.
TCK	I	Test Clock input pin, used to clock the 1149.1 state machine. No pull-up enabled. This is a dedicated input pin.
TDI	I	Test Data in pin. Used to load data into device using 1149.1 state machine. After power-up, this TAP port can be activated for configuration by sending appropriate command. (Note: once a configuration port is selected it is locked. Another configuration port cannot be selected until the power-up sequence). Pull-up is enabled during configuration. This is a dedicated input pin.
TDO	O	Output pin. Test Data Out pin used to shift data out of a device using 1149.1. This is a dedicated output pin.
Configuration Pads (Used during sysCONFIG)		
CFG[2:0]	I	Mode pins used to specify configuration mode values latched on rising edge of INITN. During configuration, a pull-up is enabled. These are dedicated pins.
INITN	I/O	Open Drain pin. Indicates the FPGA is ready to be configured. During configuration, a pull-up is enabled. This is a dedicated pin.
PROGRAMN	I	Initiates configuration sequence when asserted low. This pin always has an active pull-up. This is a dedicated pin.
DONE	I/O	Open Drain pin. Indicates that the configuration sequence is complete, and the startup sequence is in progress. This is a dedicated pin.
CCLK	I/O	Input Configuration Clock for configuring an FPGA in Slave SPI, Serial, and CPU modes. Output Configuration Clock for configuring an FPGA in Master configuration modes (Master SPI, Master Serial). This is a dedicated pin.
HOLDN/DI/BUSY/CSSPIN/CEN	I/O	Parallel configuration mode busy indicator. SPI/SPIm mode data output. This is a shared I/O pin. This is a shared I/O pin. When not in configuration, it can be used as general purpose I/O pin.
CSN/SN	I/O	Parallel configuration mode active-low chip select. Slave SPI chip select. This is a shared I/O pin. When not in configuration, it can be used as general purpose I/O pin.
CS1N	I	Parallel configuration mode active-low chip select. This is a shared I/O pin. When not in configuration, it can be used as general purpose I/O pin.
WRITEN	I	Write enable for parallel configuration modes. This is a shared I/O pin. When not in configuration, it can be used as general purpose I/O pin.
DOUT/CSON	O	Serial data output. Chip select output. SPI/SPIm mode chip select. This is a shared I/O pin. When not in configuration, it can be used as general purpose I/O
D0/MOSI/IO0	I/O	Parallel configuration I/O. Open drain during configuration. When in SPI modes, it is an output in Master mode, and input in Slave mode. This is a shared I/O pin. When not in configuration, it can be used as general purpose I/O pin.

© 2014-2018 Lattice Semiconductor Corp. All Lattice trademarks, registered trademarks, patents, and disclaimers are as listed at www.latticesemi.com/legal.
All other brand or product names are trademarks or registered trademarks of their respective holders. The specifications and information herein are subject to change without notice.

Signal Name	I/O	Description
Configuration Pads (Used during sysCONFIG) *(Continued)*		
D1/MISO/IO1	I/O	Parallel configuration I/O. Open drain during configuration. When in SPI modes, it is an input in Master mode, and output in Slave mode. This is a shared I/O pin. When not in configuration, it can be used as general purpose I/O pin.
D2/IO2	I/O	Parallel configuration I/O. Open drain during configuration. This is a shared I/O pin. When not in configuration, it can be used as general purpose I/O pin.
D3/IO3	I/O	Parallel configuration I/O. Open drain during configuration. This is a shared I/O pin. When not in configuration, it can be used as general purpose I/O pin.
D4/IO4	I/O	Parallel configuration I/O. Open drain during configuration. This is a shared I/ O pin. When not in configuration, it can be used as general purpose I/O pin.
D5/IO5	I/O	Parallel configuration I/O. Open drain during configuration. This is a shared I/ O pin. When not in configuration, it can be used as general purpose I/O pin.
D6/IO6	I/O	Parallel configuration I/O. Open drain during configuration. When in SPI modes, it is an output in Master mode, and input in Slave mode. This is a shared I/O pin. When not in configuration, it can be used as general purpose I/O pin.
D7/IO7	I/O	Parallel configuration I/O. Open drain during configuration. When in SPI modes, it is an output in Master mode, and input in Slave mode. This is a shared I/O pin. When not in configuration, it can be used as general purpose I/O pin
SERDES Function		
VCCAx	—	SERDES, transmit, receive, PLL and reference clock buffer power supply for SERDES Dual x. All VCCA supply pins must always be powered to the recommended operating voltage range. If no SERDES channels are used, connect VCCA to VCC. VCCAx = 1.1 V for ECP5, VCCAx = 1.2 V for ECP5-5G.
VCCAUXAx	—	SERDES Aux Power Supply pin for SERDES Dual x. VCCAUXAx = 2.5 V.
HDRX[P/N]_D[dual_num]CH[chan_num]	I	High-speed SERDES inputs, P = Positive, N = Negative, dual_num = [0, 1], chan_num = [0, 1]. These are dedicated SERDES input pins.
HDTX[P/N]_D[dual_num]CH[chan_num]	O	High-speed SERDES outputs, P = Positive, N = Negative, dual_num = [0, 1], chan_num = [0, 1]. These are dedicated SERDES output pins.
REFCLK[P/N]_D[dual_num]	I	SERDES Reference Clock inputs, P = Positive, N = Negative, dual_num = [0, 1]. These are dedicated SERDES input pins.
VCCHRX_D[dual_num]CH[chan_num]	—	SERDES High-Speed Inputs Termination Voltage Supplies, dual_num = [0, 1], chan_num = [0, 1]. These pins should be powered to 1.1 V on ECP5, or 1.2 V on ECP5-5G.
VCCHTX_D[dual_num]CH[chan_num]	—	SERDES High-Speed Outputs Buffer Voltage Supplies, dual_num = [0, 1], chan_num = [0, 1]. These pins should be powered to 1.1 V on ECP5, or 1.2 V on ECP5-5G.

Notes:
1. When placing switching I/Os around these critical pins that are designed to supply the device with the proper reference or supply voltage, care must be given.
2. These pins are dedicated inputs or can be used as general purpose I/O.
3. m defines the associated channel in the quad.

© 2014-2018 Lattice Semiconductor Corp. All Lattice trademarks, registered trademarks, patents, and disclaimers are as listed at www.latticesemi.com/legal.
All other brand or product names are trademarks or registered trademarks of their respective holders. The specifications and information herein are subject to change without notice.

Revision History

Date	Version	Section	Change Summary
March 2018	1.9	All	Updated formatting and page referencing.
		General Description	Updated Table 1.1. ECP5 and ECP5-5G Family Selection Guide. Added caBGA256 package in LFE5U-45.
		Architecture	Added a row for SGMII in Table 2.13. LFE5UM/LFE5UM5G SERDES Standard Support. Updated footnote #1.
		DC and Switching Characteristics	Updated Table 3.2. Recommended Operating Conditions.
			Added 2 rows and updated values in Table 3.7. DC Electrical Characteristics.
			Updated Table 3.8. ECP5/ECP5-5G Supply Current (Standby).
			Updated Table 3.11. sysI/O Recommended Operating Conditions.
			Updated Table 3.12. Single-Ended DC Characteristics.
			Updated Table 3.13. LVDS.
			Updated Table 3.14. LVDS25E DC Conditions.
			Updated Table 3.21. ECP5/ECP5-5G Maximum I/O Buffer Speed.
			Updated Table 3.28. Receiver Total Jitter Tolerance Specification.
			Updated header name of section 3.28 CPRI LV E.24/SGMII(2.5Gbps) Electrical and Timing Characteristics.
			Updated header name of section 3.29 Gigabit Ethernet/SGMII(1.25Gbps)/CPRI LV E.12 Electrical and Timing Characteristics
		Pinout Information	Updated table in section 4.3.2 LFE5U.
		Ordering Information	Added table rows in 5.2.1 Commercial.
			Added table rows in 5.2.2 Industrial.
		Supplemental Information	Updated For Further Information section.
November 2017	1.8	General Description	Updated Table 1.1. ECP5 and ECP5-5G Family Selection Guide. Added caBGA256 package in LFE5U-12 and LFE5U-25.

© 2014-2018 Lattice Semiconductor Corp. All Lattice trademarks, registered trademarks, patents, and disclaimers are as listed at www.latticesemi.com/legal.
All other brand or product names are trademarks or registered trademarks of their respective holders. The specifications and information herein are subject to change without notice.