Lattice Semiconductor Corporation - LFE5UM-25F-8BG381C Datasheet

Welcome to E-XFL.COM

Understanding Embedded - FPGAs (Field Programmable Gate Array)

Embedded - FPGAs, or Field Programmable Gate Arrays, are advanced integrated circuits that offer unparalleled flexibility and performance for digital systems. Unlike traditional fixed-function logic devices, FPGAs can be programmed and reprogrammed to execute a wide array of logical operations, enabling customized functionality tailored to specific applications. This reprogrammability allows developers to iterate designs quickly and implement complex functions without the need for custom hardware.

Applications of Embedded - FPGAs

The versatility of Embedded - FPGAs makes them indispensable in numerous fields. In telecommunications.

Details	
Product Status	Active
Number of LABs/CLBs	6000
Number of Logic Elements/Cells	24000
Total RAM Bits	1032192
Number of I/O	197
Number of Gates	-
Voltage - Supply	1.045V ~ 1.155V
Mounting Type	Surface Mount
Operating Temperature	0°C ~ 85°C (TJ)
Package / Case	381-FBGA
Supplier Device Package	381-CABGA (17x17)
Purchase URL	https://www.e-xfl.com/product-detail/lattice-semiconductor/lfe5um-25f-8bg381c

1. General Description

The ECP5/ECP5-5G family of FPGA devices is optimized to deliver high performance features such as an enhanced DSP architecture, high speed SERDES (Serializer/Deserializer), and high speed source synchronous interfaces, in an economical FPGA fabric. This combination is achieved through advances in device architecture and the use of 40 nm technology making the devices suitable for high-volume, high-speed, and low-cost applications.

The ECP5/ECP5-5G device family covers look-up-table (LUT) capacity to 84K logic elements and supports up to 365 user I/Os. The ECP5/ECP5-5G device family also offers up to 156 18 x 18 multipliers and a wide range of parallel I/O standards.

The ECP5/ECP5-5G FPGA fabric is optimized high performance with low power and low cost in mind. The ECP5/ ECP5-5G devices utilize reconfigurable SRAM logic technology and provide popular building blocks such as LUT-based logic, distributed and embedded memory, Phase-Locked Loops (PLLs), Delay-Locked Loops (DLLs), pre-engineered source synchronous I/O support, enhanced sysDSP slices and advanced configuration support, including encryption and dual-boot capabilities.

The pre-engineered source synchronous logic implemented in the ECP5/ECP5-5G device family supports a broad range of interface standards including DDR2/3, LPDDR2/3, XGMII, and 7:1 LVDS.

The ECP5/ECP5-5G device family also features high speed SERDES with dedicated Physical Coding Sublayer (PCS) functions. High jitter tolerance and low transmit jitter allow the SERDES plus PCS blocks to be configured to support an array of popular data protocols including PCI Express, Ethernet (XAUI, GbE, and SGMII) and CPRI. Transmit De-emphasis with pre- and post-cursors, and Receive Equalization settings make the SERDES suitable for transmission and reception over various forms of media.

The ECP5/ECP5-5G devices also provide flexible, reliable and secure configuration options, such as dual-boot capability, bit-stream encryption, and TransFR field upgrade features.

ECP5-5G family devices have made some enhancement in the SERDES compared to ECP5UM devices. These enhancements increase the performance of the SERDES to up to 5 Gb/s data rate.

The ECP5-5G family devices are pin-to-pin compatible with the ECP5UM devices. These allows a migration path for users to port designs from ECP5UM to ECP5-5G devices to get higher performance.

The Lattice Diamond™ design software allows large complex designs to be efficiently implemented using the ECP5/ECP5-5G FPGA family. Synthesis library support for ECP5/ECP5-5G devices is available for popular logic synthesis tools. The Diamond tools use the synthesis tool output along with the constraints from its floor planning tools to place and route the design in the ECP5/ECP5-5G device. The tools extract the timing from the routing and back-annotate it into the design for timing verification.

Lattice provides many pre-engineered IP (Intellectual Property) modules for the ECP5/ECP5-5G family. By using these configurable soft core IPs as standardized blocks, designers are free to concentrate on the unique aspects of their design, increasing their productivity.

1.1. Features

- Higher Logic Density for Increased System Integration
  - 12K to 84K LUTs
  - 197 to 365 user programmable I/Os
- Embedded SERDES
  - 270 Mb/s, up to 3.2 Gb/s, SERDES interface (ECP5)
  - 270 Mb/s, up to 5.0 Gb/s, SERDES interface (ECP5-5G)
  - Supports eDP in RDR (1.62 Gb/s) and HDR (2.7 Gb/s)
  - Up to four channels per device: PCI Express, Ethernet (1GbE, SGMII, XAUI), and CPRI
- sysDSP™
  - Fully cascadable slice architecture
  - 12 to 160 slices for high performance multiply and accumulate
  - Powerful 54-bit ALU operations
  - Time Division Multiplexing MAC Sharing
  - Rounding and truncation
  - Each slice supports
    - Half 36 x 36, two 18 x 18 or four 9 x 9 multipliers
    - Advanced 18 x 36 MAC and 18 x 18 Multiply-Multiply-Accumulate (MMAC) operations
- Flexible Memory Resources
  - Up to 3.744 Mb sysMEM™ Embedded Block RAM (EBR)
  - 194K to 669K bits distributed RAM
- sysCLOCK Analog PLLs and DLLs

© 2014-2018 Lattice Semiconductor Corp. All Lattice trademarks, registered trademarks, patents, and disclaimers are as listed at www.latticesemi.com/legal.
All other brand or product names are trademarks or registered trademarks of their respective holders. The specifications and information herein are subject to change without notice.

Dynamic Clock Select

The Dynamic Clock Select (DCS) is a smart multiplexer function available in the primary clock routing. It switches between two independent input clock sources. Depending on the operation modes, it switches between two (2) independent input clock sources either with or without any glitches. This is achieved regardless of when the select signal is toggled. Both input clocks must be running to achieve functioning glitch-less DCS output clock, but it is not required running clocks when used as non-glitch-less normal clock multiplexer.

There are two DCS blocks per device that are fed to all quadrants. The inputs to the DCS block come from all the output of MIDMUXs and Clock from CIB located at the center of the PLC array core. The output of the DCS is connected to one of the inputs of Primary Clock Center MUX.

Figure 2.7 shows the timing waveforms of the default DCS operating mode. The DCS block can be programmed to other modes. For more information about the DCS,

© 2014-2018 Lattice Semiconductor Corp. All Lattice trademarks, registered trademarks, patents, and disclaimers are as listed at www.latticesemi.com/legal.
All other brand or product names are trademarks or registered trademarks of their respective holders. The specifications and information herein are subject to change without notice.

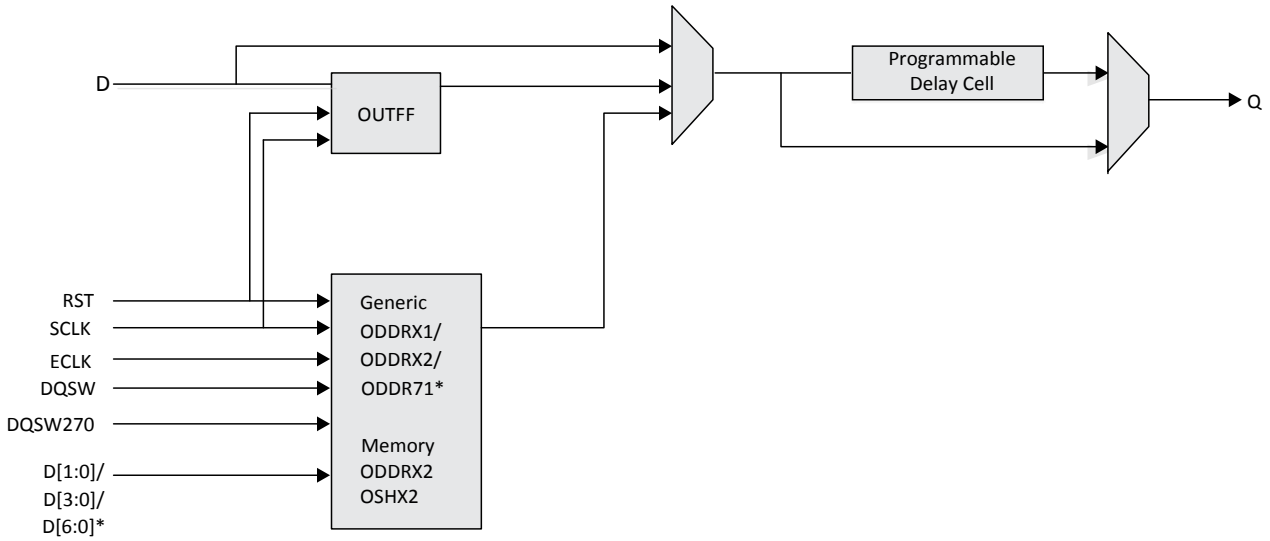

*For 7:1 LVDS interface only. It is required to use PIO pair pins PIOA/B.

Figure 2.20. Output Register Block on Left and Right Sides

Table 2.9. Output Block Port Description

Name	Type	Description
Q	Output	High Speed Data Output
D	Input	Data from core to output SDR register
D[1:0]/D[3:0]/ D[6:0]	Input	Low Speed Data from device core to output DDR register
RST	Input	Reset to the Output Block
SCLK	Input	Slow Speed System Clock
ECLK	Input	High Speed Edge Clock
DQSW	Input	Clock from DQS control Block used to generate DDR memory DQS output
DQSW270	Input	Clock from DQS control Block used to generate DDR memory DQ output

2.12. Tristate Register Block

The tristate register block registers tristate control signals from the core of the device before they are passed to the sysIO buffers. The block contains a register for SDR operation. In SDR, TD input feeds one of the flip-flops that then feeds the output. In DDR operation used mainly for DDR memory interface can be implemented on the left and right sides of the device. Here two inputs feed the tristate registers clocked by both ECLK and SCLK.

Figure 2.21 and Figure 2.22 show the Tristate Register Block functions on the device. For detailed description of the tristate register block modes and usage, refer to ECP5 and ECP5-5G High-Speed I/O Interface (TN1265).

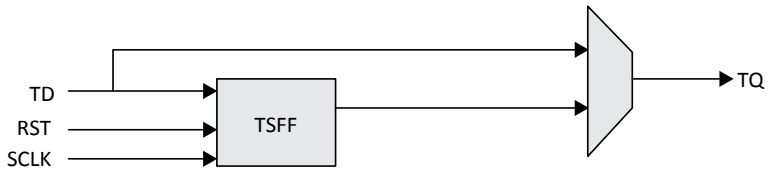

Figure 2.21. Tristate Register Block on Top Side

© 2014-2018 Lattice Semiconductor Corp. All Lattice trademarks, registered trademarks, patents, and disclaimers are as listed at www.latticesemi.com/legal.
All other brand or product names are trademarks or registered trademarks of their respective holders. The specifications and information herein are subject to change without notice.

2.14. sysI/O Buffer

Each I/O is associated with a flexible buffer referred to as a sysI/O buffer. These buffers are arranged around the periphery of the device in groups referred to as banks. The sysI/O buffers allow users to implement the wide variety of standards that are found in today's systems including LVDS, HSUL, BLVDS, SSTL Class I and II, LVCMOS, LVTTL, LVPECL, and MIPI.

2.14.1. sysI/O Buffer Banks

ECP5/ECP5-5G devices have seven sysI/O buffer banks, two banks per side at Top, Left and Right, plus one at the bottom left side. The bottom left side bank (Bank 8) is a shared I/O bank. The I/Os in that bank contains both dedicated and shared I/O for sysConfig function. When a shared pin is not used for configuration, it is available as a user I/O. For LFE5-85 devices, there is an additional I/O bank (Bank 4) that is not available in other device in the family.

In ECP5/ECP5-5G devices, the Left and Right sides are tailored to support high performance interfaces, such as DDR2, DDR3, LPDDR2, LPDDR3 and other high speed source synchronous standards. The banks on the Left and Right sides of the devices feature LVDS input and output buffers, data-width gearing, and DQSBUF block to support DDR2/3 and LPDDR2/3 interfaces. The I/Os on the top and bottom banks do not have LVDS input and output buffer, and gearing logic, but can use LVCMOS to emulate most of differential output signaling.

Each sysIO bank has its own I/O supply voltage (V_{CCIO}). In addition, the banks on the Left and Right sides of the device, have voltage reference input (shared I/O pin), VREF1 per bank, which allow it to be completely independent of each other. The V_{REF} voltage is used to set the threshold for the referenced input buffers, such as SSTL. Figure 2.25 shows the seven banks and their associated supplies.

In ECP5/ECP5-5G devices, single-ended output buffers and ratioed input buffers (LVTTL, and LVCMOS) are powered using V_{CCIO}. LVTTL, LVCMOS33, LVCMOS25 and LVCMOS12 can also be set as fixed threshold inputs independent of V_{CCIO}.

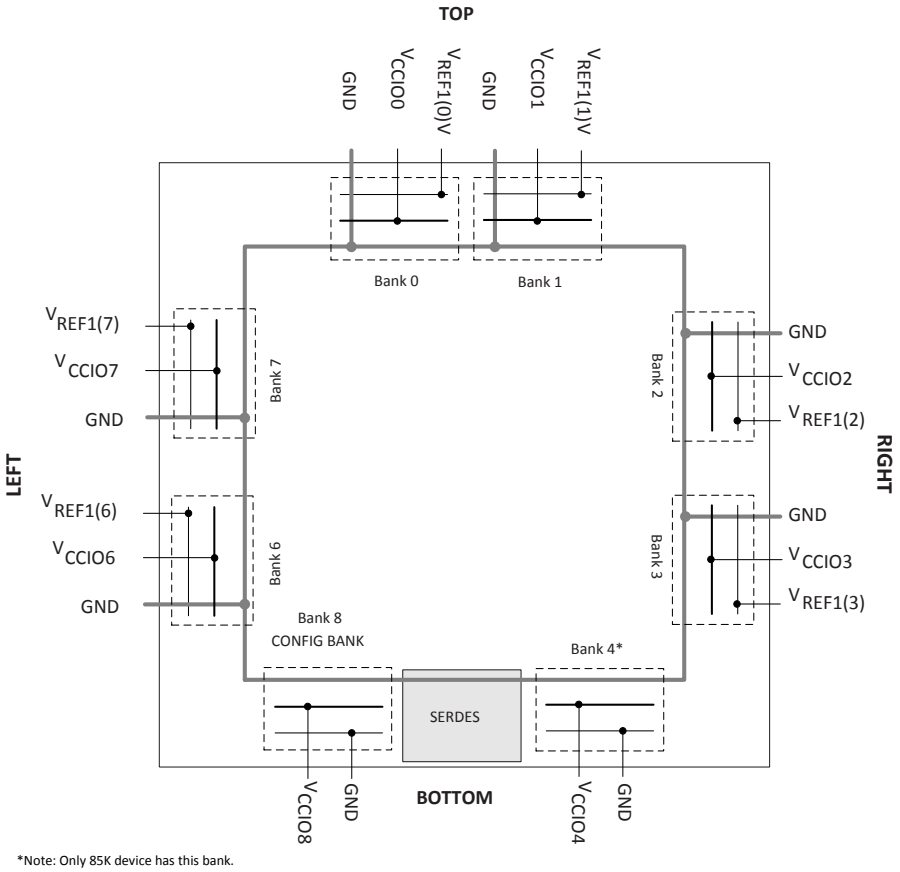

Figure 2.25. ECP5/ECP5-5G Device Family Banks

© 2014-2018 Lattice Semiconductor Corp. All Lattice trademarks, registered trademarks, patents, and disclaimers are as listed at www.latticesemi.com/legal.
All other brand or product names are trademarks or registered trademarks of their respective holders. The specifications and information herein are subject to change without notice.

2.14.4. On-Chip Programmable Termination

The ECP5/ECP5-5G devices support a variety of programmable on-chip terminations options, including:

- Dynamically switchable Single-Ended Termination with programmable resistor values of 50 Ω, 75 Ω, or 150 Ω.
- Common mode termination of 100 Ω for differential inputs.

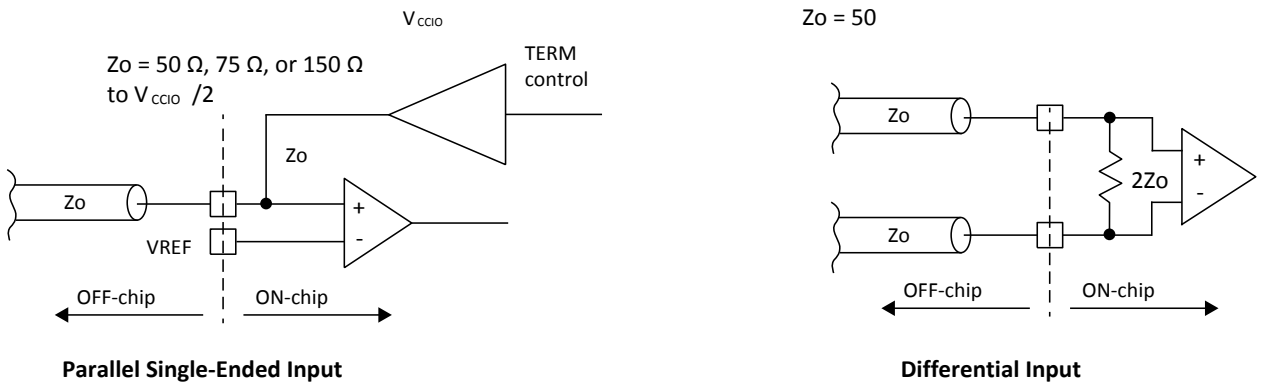

Parallel Single-Ended Input **Differential Input**

Figure 2.26. On-Chip Termination

See Table 2.12 for termination options for input modes.

Table 2.12. On-Chip Termination Options for Input Modes

IO_TYPE	Terminate to $V_{CCIO}/2$*	Differential Termination Resistor*
LVDS25	—	100
BLVDS25	—	100
MLVDS	—	100
LVPECL33	—	100
subLVDS	—	100
SLVS	—	100
HSUL12	50, 75, 150	—
HSUL12D	—	100
SSTL135_I / II	50, 75, 150	—
SSTL135D_I / II	—	100
SSTL15_I / II	50, 75, 150	—
SSTL15D_I / II	—	100
SSTL18_I / II	50, 75, 150	—
SSTL18D_I / II	—	100

***Notes**:

TERMINATE to $V_{CCIO}/2$ (Single-Ended) and DIFFRENTIAL TERMINATION RESISTOR when turned on can only have one setting per bank. Only left and right banks have this feature.

Use of TERMINATE to $V_{CCIO}/2$ and DIFFRENTIAL TERMINATION RESISTOR are mutually exclusive in an I/O bank. On-chip termination tolerance ±20%.

Refer to ECP5 and ECP5-5G sysIO Usage Guide (TN1262) for on-chip termination usage and value ranges.

2.14.5. Hot Socketing

ECP5/ECP5-5G devices have been carefully designed to ensure predictable behavior during power-up and power-down. During power-up and power-down sequences, the I/Os remain in tristate until the power supply voltage is high enough to ensure reliable operation. In addition, leakage into I/O pins is controlled within specified limits. See the Hot Socketing Specifications section on page 48.

© 2014-2018 Lattice Semiconductor Corp. All Lattice trademarks, registered trademarks, patents, and disclaimers are as listed at www.latticesemi.com/legal.
All other brand or product names are trademarks or registered trademarks of their respective holders. The specifications and information herein are subject to change without notice.

Table 2.14. Available SERDES Duals per LFE5UM/LFE5UM5G Devices

Package	LFE5UM/LFE5UM5G-25	LFE5UM/LFE5UM5G-45	LFE5UM/LFE5UM5G-85
285 csfBGA	1	1	1
381 caBGA	1	2	2
554 caBGA	—	2	2
756 caBGA	—	—	2

2.15.1. SERDES Block

A SERDES receiver channel may receive the serial differential data stream, equalize the signal, perform Clock and Data Recovery (CDR) and de-serialize the data stream before passing the 8- or 10-bit data to the PCS logic. The SERDES transmitter channel may receive the parallel 8- or 10-bit data, serialize the data and transmit the serial bit stream through the differential drivers. Figure 2.28 shows a single-channel SERDES/PCS block. Each SERDES channel provides a recovered clock and a SERDES transmit clock to the PCS block and to the FPGA core logic.

Each transmit channel, receiver channel, and SERDES PLL shares the same power supply (VCCA). The output and input buffers of each channel have their own independent power supplies (VCCHTX and VCCHRX).

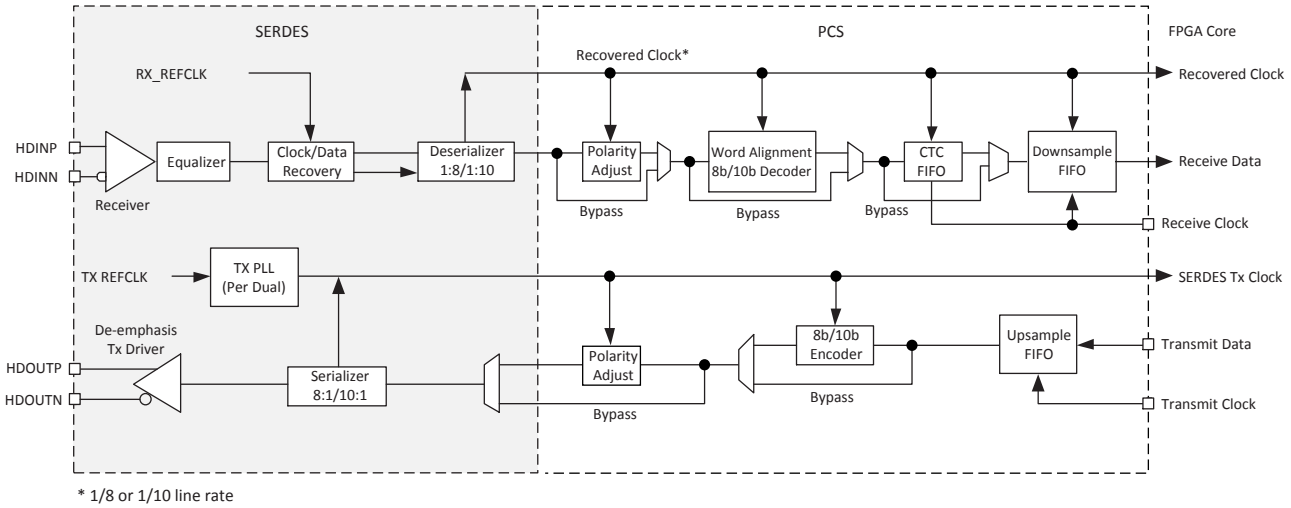

Figure 2.28. Simplified Channel Block Diagram for SERDES/PCS Block

2.15.2. PCS

As shown in Figure 2.28, the PCS receives the parallel digital data from the deserializer and selects the polarity, performs word alignment, decodes (8b/10b), provides Clock Tolerance Compensation and transfers the clock domain from the recovered clock to the FPGA clock via the Down Sample FIFO.

For the transmit channel, the PCS block receives the parallel data from the FPGA core, encodes it with 8b/10b, selects the polarity and passes the 8/10 bit data to the transmit SERDES channel.

The PCS also provides bypass modes that allow a direct 8-bit or 10-bit interface from the SERDES to the FPGA logic. The PCS interface to the FPGA can also be programmed to run at 1/2 speed for a 16-bit or 20-bit interface to the FPGA logic.

Some of the enhancements in LFE5UM/LFE5UM5G SERDES/PCS include:

- Higher clock/channel granularity: Dual channel architecture provides more clock resource per channel.
- Enhanced Tx de-emphasis: Programmable pre- and post-cursors improves Tx output signaling
- Bit-slip function in PCS: Improves logic needed to perform Word Alignment function

Refer to ECP5 and ECP5-5G SERDES/PCS Usage Guide (TN1261) for more information.

© 2014-2018 Lattice Semiconductor Corp. All Lattice trademarks, registered trademarks, patents, and disclaimers are as listed at www.latticesemi.com/legal.
All other brand or product names are trademarks or registered trademarks of their respective holders. The specifications and information herein are subject to change without notice.

3.3. Power Supply Ramp Rates

Table 3.3. Power Supply Ramp Rates

Symbol	Parameter	Min	Typ	Max	Unit
t_{RAMP}	Power Supply ramp rates for all supplies	0.01	—	10	V/ms

Note: Assumes monotonic ramp rates.

3.4. Power-On-Reset Voltage Levels

Table 3.4. Power-On-Reset Voltage Levels

Symbol	Parameter			Min	Typ	Max	Unit
V_{PORUP}	All Devices	Power-On-Reset ramp-up trip point (Monitoring V_{CC}, V_{CCAUX}, and V_{CCIO8})	V_{CC}	0.90	—	1.00	V
			V_{CCAUX}	2.00	—	2.20	V
			V_{CCIO8}	0.95	—	1.06	V
V_{PORDN}	All Devices	Power-On-Reset ramp-down trip point (Monitoring V_{CC}, and V_{CCAUX}	V_{CC}	0.77	—	0.87	V
			V_{CCAUX}	1.80	—	2.00	V

Notes:

- These POR trip points are only provided for guidance. Device operation is only characterized for power supply voltages specified under recommended operating conditions.
- Only V_{CCIO8} has a Power-On-Reset ramp up trip point. All other V_{CCIOs} do not have Power-On-Reset ramp up detection.
- V_{CCIO8} does not have a Power-On-Reset ramp down detection. V_{CCIO8} must remain within the Recommended Operating Conditions to ensure proper operation.

3.5. Power up Sequence

Power-On-Reset (POR) puts the ECP5/ECP5-5G device in a reset state. POR is released when V_{CC}, V_{CCAUX}, and V_{CCIO8} are ramped above the V_{PORUP} voltage, as specified above.

V_{CCIO8} controls the voltage on the configuration I/O pins. If the ECP5/ECP5-5G device is using Master SPI mode to download configuration data from external SPI Flash, it is required to ramp V_{CCIO8} above V_{IH} of the external SPI Flash, before at least one of the other two supplies (V_{CC} and/or V_{CCAUX}) is ramped to V_{PORUP} voltage level. If the system cannot meet this power up sequence requirement, and requires the V_{CCIO8} to be ramped last, then the system must keep either PROGRAMN or INITN pin LOW during power up, until V_{CCIO8} reaches V_{IH} of the external SPI Flash. This ensures the signals driven out on the configuration pins to the external SPI Flash meet the V_{IH} voltage requirement of the SPI Flash.

For LFE5UM/LFE5UM5G devices, it is required to power up V_{CCA}, before V_{CCAUXA} is powered up.

3.6. Hot Socketing Specifications

Table 3.5. Hot Socketing Specifications

Symbol	Parameter	Condition	Min	Typ	Max	Unit
IDK_HS	Input or I/O Leakage Current for Top and Bottom Banks Only	$0 \le V_{IN} \le V_{IH}$ (Max)	—	—	±1	mA
IDK	Input or I/O Leakage Current for Left and Right Banks Only	$0 \le V_{IN} < V_{CCIO}$	—	—	±1	mA
		$V_{CCIO} \le V_{IN} \le V_{CCIO} + 0.5$ V	—	18	—	mA

Notes:

1. V_{CC}, V_{CCAUX} and V_{CCIO} should rise/fall monotonically.
2. I_{DK} is additive to I_{PU}, I_{PW} or I_{BH}.
3. LVCMOS and LVTTL only.
4. Hot socket specification defines when the hot socketed device's junction temperature is at 85 °C or below. When the hot socketed device's junction temperature is above 85 °C, the I_{DK} current can exceed ±1 mA.

© 2014-2018 Lattice Semiconductor Corp. All Lattice trademarks, registered trademarks, patents, and disclaimers are as listed at www.latticesemi.com/legal.
All other brand or product names are trademarks or registered trademarks of their respective holders. The specifications and information herein are subject to change without notice.

Table 3.10. ECP5-5G

Symbol	Description	Typ	Max	Unit
Standby (Power Down)				
I_{CCA-SB}	V_{CCA} Power Supply Current (Per Channel)	4	9.5	mA
$I_{CCHRX-SB}$[4]	V_{CCHRX}, Input Buffer Current (Per Channel)	—	0.1	mA
$I_{CCHTX-SB}$	V_{CCHTX}, Output Buffer Current (Per Channel)	—	0.9	mA
Operating (Data Rate = 5 Gb/s)				
I_{CCA-OP}	V_{CCA} Power Supply Current (Per Channel)	58	67	mA
$I_{CCHRX-OP}$[5]	V_{CCHRX}, Input Buffer Current (Per Channel)	0.4	0.5	mA
$I_{CCHTX-OP}$	V_{CCHTX}, Output Buffer Current (Per Channel)	10	13	mA
Operating (Data Rate = 3.2 Gb/s)				
I_{CCA-OP}	V_{CCA} Power Supply Current (Per Channel)	48	57	mA
$I_{CCHRX-OP}$[5]	V_{CCHRX}, Input Buffer Current (Per Channel)	0.4	0.5	mA
$I_{CCHTX-OP}$	V_{CCHTX}, Output Buffer Current (Per Channel)	10	13	mA
Operating (Data Rate = 2.5 Gb/s)				
I_{CCA-OP}	V_{CCA} Power Supply Current (Per Channel)	44	53	mA
$I_{CCHRX-OP}$[5]	V_{CCHRX}, Input Buffer Current (Per Channel)	0.4	0.5	mA
$I_{CCHTX-OP}$	V_{CCHTX}, Output Buffer Current (Per Channel)	10	13	mA
Operating (Data Rate = 1.25 Gb/s)				
I_{CCA-OP}	V_{CCA} Power Supply Current (Per Channel)	36	46	mA
$I_{CCHRX-OP}$[5]	V_{CCHRX}, Input Buffer Current (Per Channel)	0.4	0.5	mA
$I_{CCHTX-OP}$	V_{CCHTX}, Output Buffer Current (Per Channel)	10	13	mA
Operating (Data Rate = 270 Mb/s)				
I_{CCA-OP}	V_{CCA} Power Supply Current (Per Channel)	30	40	mA
$I_{CCHRX-OP}$[5]	V_{CCHRX}, Input Buffer Current (Per Channel)	0.4	0.5	mA
$I_{CCHTX-OP}$	V_{CCHTX}, Output Buffer Current (Per Channel)	8	10	mA

Notes:

1. Rx Equalization enabled, Tx De-emphasis (pre-cursor and post-cursor) disabled
2. Per Channel current is calculated with both channels on in a Dual, and divide current by two. If only one channel is on, current will be higher.
3. To calculate with Tx De-emphasis enabled, use the Diamond Power Calculator tool.
4. For $I_{CCHRX-SB}$, during Standby, input termination on Rx are disabled.
5. For $I_{CCHRX-OP}$, during operational, the max specified when external AC coupling is used. If externally DC coupled, the power is based on current pulled down by external driver when the input is driven to LOW.

© 2014-2018 Lattice Semiconductor Corp. All Lattice trademarks, registered trademarks, patents, and disclaimers are as listed at www.latticesemi.com/legal.
All other brand or product names are trademarks or registered trademarks of their respective holders. The specifications and information herein are subject to change without notice.

3.14.4. LVDS25E

The top and bottom sides of ECP5/ECP5-5G devices support LVDS outputs via emulated complementary LVCMOS outputs in conjunction with a parallel resistor across the driver outputs. The scheme shown in Figure 3.1 is one possible solution for point-to-point signals.

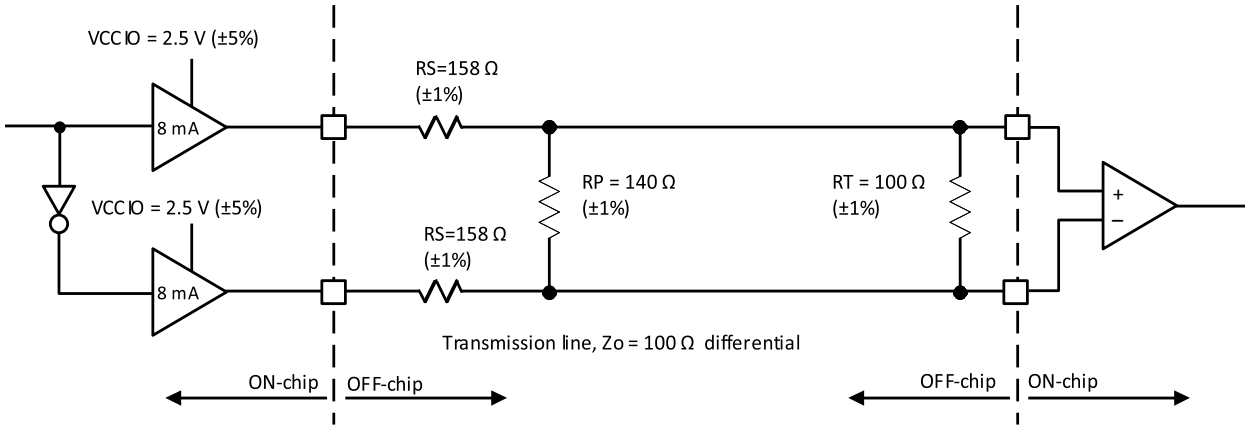

Figure 3.1. LVDS25E Output Termination Example

Table 3.14. LVDS25E DC Conditions

Parameter	Description	Typical	Unit
V_{CCIO}	Output Driver Supply (±5%)	2.50	V
Z_{OUT}	Driver Impedance	20	Ω
R_S	Driver Series Resistor (±1%)	158	Ω
R_P	Driver Parallel Resistor (±1%)	140	Ω
R_T	Receiver Termination (±1%)	100	Ω
V_{OH}	Output High Voltage	1.43	V
V_{OL}	Output Low Voltage	1.07	V
V_{OD}	Output Differential Voltage	0.35	V
V_{CM}	Output Common Mode Voltage	1.25	V
Z_{BACK}	Back Impedance	100.5	Ω
I_{DC}	DC Output Current	6.03	mA

Note: For input buffer, see LVDS Table 3.13 on page 55.

© 2014-2018 Lattice Semiconductor Corp. All Lattice trademarks, registered trademarks, patents, and disclaimers are as listed at www.latticesemi.com/legal.
All other brand or product names are trademarks or registered trademarks of their respective holders. The specifications and information herein are subject to change without notice.

3.18. External Switching Characteristics

Over recommended commercial operating conditions.

Table 3.22. ECP5/ECP5-5G External Switching Characteristics

Parameter	Description	Device	–8		–7		–6		Unit
			Min	Max	Min	Max	Min	Max	
Clocks									
Primary Clock									
f_{MAX_PRI}	Frequency for Primary Clock Tree	—	—	370	—	303	—	257	MHz
t_{W_PRI}	Clock Pulse Width for Primary Clock	—	0.8	—	0.9	—	1.0	—	ns
t_{SKEW_PRI}	Primary Clock Skew within a Device	—	—	420	—	462	—	505	ps
Edge Clock									
f_{MAX_EDGE}	Frequency for Edge Clock Tree	—	—	400	—	350	—	312	MHz
t_{W_EDGE}	Clock Pulse Width for Edge Clock	—	1.175	—	1.344	—	1.50	—	ns
t_{SKEW_EDGE}	Edge Clock Skew within a Bank	—	—	160	—	180	—	200	ps
Generic SDR Input									
General I/O Pin Parameters Using Dedicated Primary Clock Input without PLL									
t_{CO}	Clock to Output - PIO Output Register	All Devices	—	5.4	—	6.1	—	6.8	ns
t_{SU}	Clock to Data Setup - PIO Input Register	All Devices	0	—	0	—	0	—	ns
t_{H}	Clock to Data Hold - PIO Input Register	All Devices	2.7	—	3	—	3.3	—	ns
t_{SU_DEL}	Clock to Data Setup - PIO Input Register with Data Input Delay	All Devices	1.2	—	1.33	—	1.46	—	ns
t_{H_DEL}	Clock to Data Hold - PIO Input Register with Data Input Delay	All Devices	0	—	0	—	0	—	ns
f_{MAX_IO}	Clock Frequency of I/O and PFU Register	All Devices	—	400	—	350	—	312	MHz
General I/O Pin Parameters Using Dedicated Primary Clock Input with PLL									
t_{COPLL}	Clock to Output - PIO Output Register	All Devices	—	3.5	—	3.8	—	4.1	ns
t_{SUPLL}	Clock to Data Setup - PIO Input Register	All Devices	0.7	—	0.78	—	0.85	—	ns
t_{HPLL}	Clock to Data Hold - PIO Input Register	All Devices	0.8	—	0.89	—	0.98	—	ns
t_{SU_DELPLL}	Clock to Data Setup - PIO Input Register with Data Input Delay	All Devices	1.6	—	1.78	—	1.95	—	ns

© 2014-2018 Lattice Semiconductor Corp. All Lattice trademarks, registered trademarks, patents, and disclaimers are as listed at www.latticesemi.com/legal.
All other brand or product names are trademarks or registered trademarks of their respective holders. The specifications and information herein are subject to change without notice.

Table 3.22. ECP5/ECP5-5G External Switching Characteristics *(Continued)*

Parameter	Description	Device	–8		–7		–6		Unit
			Min	Max	Min	Max	Min	Max	
t_{H_DELPLL}	Clock to Data Hold - PIO Input Register with Data Input Delay	All Devices	0	—	0	—	0	—	ns
Generic DDR Input									
Generic DDRX1 Inputs With Clock and Data Centered at Pin (GDDRX1_RX.SCLK.Centered) Using PCLK Clock Input - Figure 3.6									
$t_{SU_GDDRX1_centered}$	Data Setup Before CLK Input	All Devices	0.52	—	0.52	—	0.52	—	ns
$t_{HD_GDDRX1_centered}$	Data Hold After CLK Input	All Devices	0.52	—	0.52	—	0.52	—	ns
$f_{DATA_GDDRX1_centered}$	GDDRX1 Data Rate	All Devices	—	500	—	500	—	500	Mb/s
$f_{MAX_GDDRX1_centered}$	GDDRX1 CLK Frequency (SCLK)	All Devices	—	250	—	250	—	250	MHz
Generic DDRX1 Inputs With Clock and Data Aligned at Pin (GDDRX1_RX.SCLK.Aligned) Using PCLK Clock Input - Figure 3.7									
$t_{SU_GDDRX1_aligned}$	Data Setup from CLK Input	All Devices	—	–0.55	—	–0.55	—	–0.55	ns + 1/2 UI
$t_{HD_GDDRX1_aligned}$	Data Hold from CLK Input	All Devices	0.55	—	0.55	—	0.55	—	ns + 1/2 UI
$f_{DATA_GDDRX1_aligned}$	GDDRX1 Data Rate	All Devices	—	500	—	500	—	500	Mb/s
$f_{MAX_GDDRX1_aligned}$	GDDRX1 CLK Frequency (SCLK)	All Devices	—	250	—	250	—	250	MHz
Generic DDRX2 Inputs With Clock and Data Centered at Pin (GDDRX2_RX.ECLK.Centered) Using PCLK Clock Input, Left and Right sides Only - Figure 3.6									
$t_{SU_GDDRX2_centered}$	Data Setup before CLK Input	All Devices	0.321	—	0.403	—	0.471	—	ns
$t_{HD_GDDRX2_centered}$	Data Hold after CLK Input	All Devices	0.321	—	0.403	—	0.471	—	ns
$f_{DATA_GDDRX2_centered}$	GDDRX2 Data Rate	All Devices	—	800	—	700	—	624	Mb/s
$f_{MAX_GDDRX2_centered}$	GDDRX2 CLK Frequency (ECLK)	All Devices	—	400	—	350	—	312	MHz
Generic DDRX2 Inputs With Clock and Data Aligned at Pin (GDDRX2_RX.ECLK.Aligned) Using PCLK Clock Input, Left and Right sides Only - Figure 3.7									
$t_{SU_GDDRX2_aligned}$	Data Setup from CLK Input	All Devices	—	–0.344	—	–0.42	—	-0.495	ns + 1/2 UI
$t_{HD_GDDRX2_aligned}$	Data Hold from CLK Input	All Devices	0.344	—	0.42	—	0.495	—	ns + 1/2 UI
$f_{DATA_GDDRX2_aligned}$	GDDRX2 Data Rate	All Devices	—	800	—	700	—	624	Mb/s
$f_{MAX_GDDRX2_aligned}$	GDDRX2 CLK Frequency	All Devices	—	400	—	350	—	312	MHz
Video DDRX71 Inputs With Clock and Data Aligned at Pin (GDDRX71_RX.ECLK) Using PLL Clock Input, Left and Right sides Only Figure 3.11									
$t_{SU_LVDS71_i}$	Data Setup from CLK Input (bit i)	All Devices	—	–0.271	—	–0.39	—	–0.41	ns+(1/2+i) * UI
$t_{HD_LVDS71_i}$	Data Hold from CLK Input (bit i)	All Devices	0.271	—	0.39	—	0.41	—	ns+(1/2+i) * UI
f_{DATA_LVDS71}	DDR71 Data Rate	All Devices	—	756	—	620	—	525	Mb/s
f_{MAX_LVDS71}	DDR71 CLK Frequency (ECLK)	All Devices	—	378	—	310	—	262.5	MHz

© 2014-2018 Lattice Semiconductor Corp. All Lattice trademarks, registered trademarks, patents, and disclaimers are as listed at www.latticesemi.com/legal.
All other brand or product names are trademarks or registered trademarks of their respective holders. The specifications and information herein are subject to change without notice.

Parameter	Description	Device	–8		–7		–6		Unit
			Min	Max	Min	Max	Min	Max	
f_{DATA_DDR2} f_{DATA_DDR3} f_{DATA_DDR3L} f_{DATA_LPDDR2} f_{DATA_LPDDR3}	DDR Memory Data Rate	All Devices	—	800	—	700	—	624	Mb/s
f_{MAX_DDR2} f_{MAX_DDR3} f_{MAX_DDR3L} f_{MAX_LPDDR2} f_{MAX_LPDDR3}	DDR Memory CLK Frequency (ECLK)	All Devices	—	400	—	350	—	312	MHz
DDR2/DDR3/DDR3L/LPDDR2/LPDDR3 WRITE (DQ Output Data are Centered to DQS)									
t_{DQVBS_DDR2} t_{DQVBS_DDR3} t_{DQVBS_DDR3L} t_{DQVBS_LPDDR2} t_{DQVBS_LPDDR3}	Data Output Valid before DQS Output	All Devices	—	–0.25	—	–0.25	—	-0.25	UI
t_{DQVAS_DDR2} t_{DQVAS_DDR3} t_{DQVAS_DDR3L} t_{DQVAS_LPDDR2} t_{DQVAS_LPDDR3}	Data Output Valid after DQS Output	All Devices	0.25	—	0.25	—	0.25	—	UI
f_{DATA_DDR2} f_{DATA_DDR3} f_{DATA_DDR3L} f_{DATA_LPDDR2} f_{DATA_LPDDR3}	DDR Memory Data Rate	All Devices	—	800	—	700	—	624	Mb/s
f_{MAX_DDR2} f_{MAX_DDR3} f_{MAX_DDR3L} f_{MAX_LPDDR2} f_{MAX_LPDDR3}	DDR Memory CLK Frequency (ECLK)	All Devices	—	400	—	350	—	312	MHz

Notes:

1. Commercial timing numbers are shown. Industrial numbers are typically slower and can be extracted from the Diamond software.
2. General I/O timing numbers are based on LVCMOS 2.5, 12 mA, Fast Slew Rate, 0pf load.
   Generic DDR timing are numbers based on LVDS I/O.
   DDR2 timing numbers are based on SSTL18.
   DDR3 timing numbers are based on SSTL15.
   LPDDR2 and LPDDR3 timing numbers are based on HSUL12.
3. Uses LVDS I/O standard for measurements.
4. Maximum clock frequencies are tested under best case conditions. System performance may vary upon the user environment.
5. All numbers are generated with the Diamond software.

© 2014-2018 Lattice Semiconductor Corp. All Lattice trademarks, registered trademarks, patents, and disclaimers are as listed at www.latticesemi.com/legal.
All other brand or product names are trademarks or registered trademarks of their respective holders. The specifications and information herein are subject to change without notice.

3.27. XAUI/CPRI LV E.30 Electrical and Timing Characteristics

3.27.1. AC and DC Characteristics

Over recommended operating conditions.

Table 3.33. Transmit

Symbol	Description	Test Conditions	Min	Typ	Max	Unit
T_{RF}	Differential rise/fall time	20% to 80%	—	80	—	ps
$Z_{TX_DIFF_DC}$	Differential impedance	—	80	100	120	Ω
J_{TX_DDJ}[2, 3]	Output data deterministic jitter	—	—	—	0.17	UI
J_{TX_TJ}[1, 2, 3]	Total output data jitter	—	—	—	0.35	UI

Notes:
1. Total jitter includes both deterministic jitter and random jitter.
2. Jitter values are measured with each CML output AC coupled into a 50 Ω impedance (100 Ω differential impedance).
3. Jitter and skew are specified between differential crossings of the 50% threshold of the reference signal.

Over recommended operating conditions.

Table 3.34. Receive and Jitter Tolerance

Symbol	Description	Test Conditions	Min	Typ	Max	Unit
RL_{RX_DIFF}	Differential return loss	From 100 MHz to 3.125 GHz	10	—	—	dB
RL_{RX_CM}	Common mode return loss	From 100 MHz to 3.125 GHz	6	—	—	dB
Z_{RX_DIFF}	Differential termination resistance	—	80	100	120	Ω
J_{RX_DJ}[1, 2, 3]	Deterministic jitter tolerance (peak-to-peak)	—	—	—	0.37	UI
J_{RX_RJ}[1, 2, 3]	Random jitter tolerance (peak-to-peak)	—	—	—	0.18	UI
J_{RX_SJ}[1, 2, 3]	Sinusoidal jitter tolerance (peak-to-peak)	—	—	—	0.10	UI
J_{RX_TJ}[1, 2, 3]	Total jitter tolerance (peak-to-peak)	—	—	—	0.65	UI
T_{RX_EYE}	Receiver eye opening	—	0.35	—	—	UI

Notes:
1. Total jitter includes deterministic jitter, random jitter and sinusoidal jitter.
2. Jitter values are measured with each high-speed input AC coupled into a 50 Ω impedance.
3. Jitter and skew are specified between differential crossings of the 50% threshold of the reference signal.

3.28. CPRI LV E.24/SGMII(2.5Gbps) Electrical and Timing Characteristics

3.28.1. AC and DC Characteristics

Table 3.35. Transmit

Symbol	Description	Test Conditions	Min	Typ	Max	Unit
T_{RF}[1]	Differential rise/fall time	20% to 80%	—	80	—	ps
$Z_{TX_DIFF_DC}$	Differential impedance	—	80	100	120	Ω
J_{TX_DDJ}[3, 4]	Output data deterministic jitter	—	—	—	0.17	UI
J_{TX_TJ}[2, 3, 4]	Total output data jitter	—	—	—	0.35	UI

Notes:
1. Rise and Fall times measured with board trace, connector and approximately 2.5 pf load.
2. Total jitter includes both deterministic jitter and random jitter. The random jitter is the total jitter minus the actual deterministic jitter.
3. Jitter values are measured with each CML output AC coupled into a 50 Ω impedance (100 Ω differential impedance).
4. Jitter and skew are specified between differential crossings of the 50% threshold of the reference signal.

© 2014-2018 Lattice Semiconductor Corp. All Lattice trademarks, registered trademarks, patents, and disclaimers are as listed at www.latticesemi.com/legal.
All other brand or product names are trademarks or registered trademarks of their respective holders. The specifications and information herein are subject to change without notice.

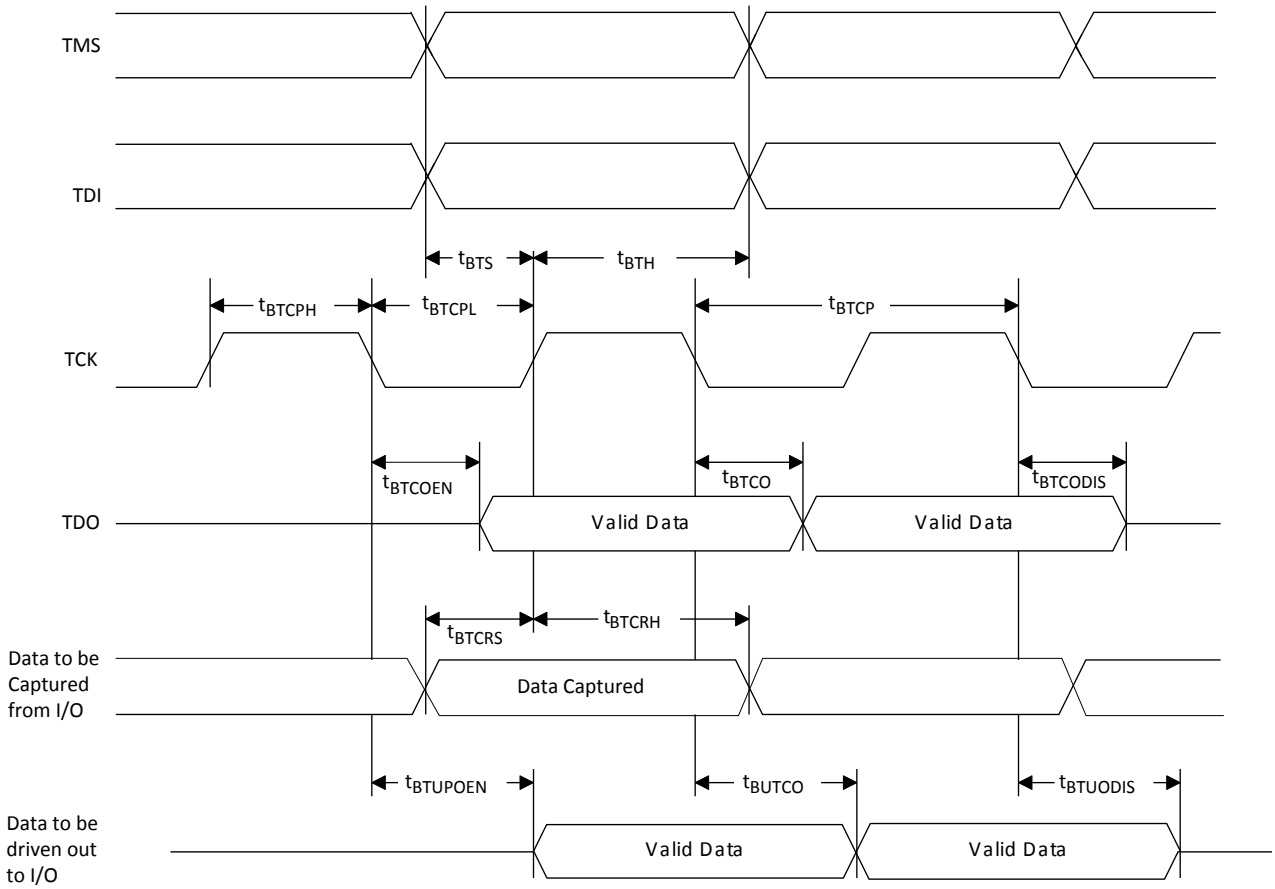

Figure 3.23. JTAG Port Timing Waveforms

3.33. Switching Test Conditions

Figure 3.24 shows the output test load that is used for AC testing. The specific values for resistance, capacitance, voltage, and other test conditions are listed in Table 3.44.

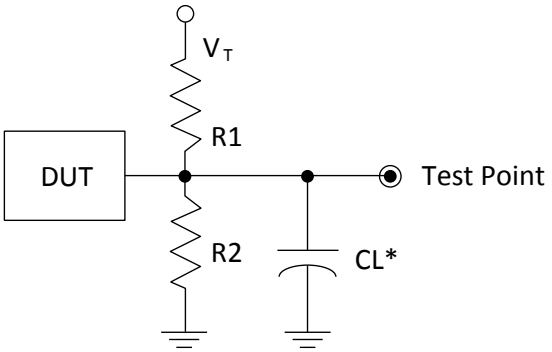

*CL Includes Test Fixture and Probe Capacitance

Figure 3.24. Output Test Load, LVTTL and LVCMOS Standards

© 2014-2018 Lattice Semiconductor Corp. All Lattice trademarks, registered trademarks, patents, and disclaimers are as listed at www.latticesemi.com/legal.
All other brand or product names are trademarks or registered trademarks of their respective holders. The specifications and information herein are subject to change without notice.

4.3.2. LFE5U

Pin Information Summary		LFE5U-12			LFE5U-25			LFE5U-45				LFE5U-85			
Pin Type		256 caBGA	285 csfBGA	381 caBGA	256 caBGA	285 csfBGA	381 caBGA	256 caBGA	285 csfBGA	381 caBGA	554 caBGA	285 csfBG	381 caBGA	554 caBGA	756 caBG
General Purpose Inputs/Outputs per Bank	Bank 0	24	6	24	24	6	24	24	6	27	32	6	27	32	56
	Bank 1	32	6	32	32	6	32	32	6	33	40	6	33	40	48
	Bank 2	32	21	32	32	21	32	32	21	32	32	21	34	32	48
	Bank 3	32	28	32	32	28	32	32	28	33	48	28	33	48	64
	Bank 4	0	0	0	0	0	0	0	0	0	0	0	0	14	24
	Bank 6	32	26	32	32	26	32	32	26	33	48	26	33	48	64
	Bank 7	32	18	32	32	18	32	32	18	32	32	18	32	32	48
	Bank 8	13	13	13	13	13	13	13	13	13	13	13	13	13	13
Total Single-Ended User		197	118	197	197	118	197	197	118	203	245	118	205	259	365
VCC		6	13	20	6	13	20	6	13	20	24	13	20	24	36
VCCAUX (Core)		2	3	4	2	3	4	2	3	4	9	3	4	9	8
VCCIO	Bank 0	2	1	2	2	1	2	2	1	2	3	1	2	3	4
	Bank 1	2	1	2	2	1	2	2	1	2	3	1	2	3	4
	Bank 2	2	2	3	2	2	3	2	2	3	4	2	3	4	4
	Bank 3	2	2	3	2	2	3	2	2	3	3	2	3	3	4
	Bank 4	0	0	0	0	0	0	0	0	0	0	0	0	2	2
	Bank 6	2	2	3	2	2	3	2	2	3	4	2	3	4	4
	Bank 7	2	2	3	2	2	3	2	2	3	3	2	3	3	4
	Bank 8	1	2	2	1	2	2	1	2	2	2	2	2	2	2
TAP		4	4	4	4	4	4	4	4	4	4	4	4	4	4
Miscellaneous Dedicated		7	7	7	7	7	7	7	7	7	7	7	7	7	7
GND		27	123	99	27	123	99	27	123	99	198	123	99	198	267
NC		0	1	26	0	1	26	0	1	26	33	1	26	33	29
Reserved		0	4	6	0	4	6	0	4	6	12	4	6	12	12
Total Balls		256	285	381	256	285	381	256	285	381	554	285	381	554	756
High Speed Differential Input / Output Pairs		Bank	0	0	0	0	0	0	0	0	0	0	0	0	0
		Bank	0	0	0	0	0	0	0	0	0	0	0	0	0
		Bank	16/8	10/8	16/8	16/8	10/8	16/8	16/8	10/8	16/8	16/8	10/8	17/9	16/8
		Bank	16/8	14/7	16/8	16/8	14/7	16/8	16/8	14/7	16/8	24/12	14/7	16/8	24/1
		Bank	0	0	0	0	0	0	0	0	0	0	0	0	0
		Bank	16/8	13/6	16/8	16/8	13/6	16/8	16/8	13/6	16/8	24/12	13/6	16/8	24/1
		Bank	16/8	8/6	16/8	16/8	8/6	16/8	16/8	8/6	16/8	16/8	8/6	16/8	16/8
		Bank	0	0	0	0	0	0	0	0	0	0	0	0	0
Total High Speed		64/32	45/27	64/32	64/32	45/27	64/32	64/32	45/27	64/32	80/40	45/27	65/33	80/40	112/
DQS Groups (> 11 pins in group)		Bank	0	0	0	0	0	0	0	0	0	0	0	0	0
		Bank	0	0	0	0	0	0	0	0	0	0	0	0	0
		Bank	2	1	2	2	1	2	2	1	2	2	1	2	2
		Bank	2	2	2	2	2	2	2	2	2	3	2	2	3
		Bank	0	0	0	0	0	0	0	0	0	0	0	0	0
		Bank	2	2	2	2	2	2	2	2	2	3	2	2	3
		Bank	2	1	2	2	1	2	2	1	2	2	1	2	2
		Bank	0	0	0	0	0	0	0	0	0	0	0	0	0
Total DQS Groups		8	6	8	8	6	8	8	6	8	10	6	8	10	14

© 2014-2018 Lattice Semiconductor Corp. All Lattice trademarks, registered trademarks, patents, and disclaimers are as listed at www.latticesemi.com/legal.
All other brand or product names are trademarks or registered trademarks of their respective holders. The specifications and information herein are subject to change without notice.

Revision History

Date	Version	Section	Change Summary
March 2018	1.9	All	Updated formatting and page referencing.
		General Description	Updated Table 1.1. ECP5 and ECP5-5G Family Selection Guide. Added caBGA256 package in LFE5U-45.
		Architecture	Added a row for SGMII in Table 2.13. LFE5UM/LFE5UM5G SERDES Standard Support. Updated footnote #1.
		DC and Switching Characteristics	Updated Table 3.2. Recommended Operating Conditions.
			Added 2 rows and updated values in Table 3.7. DC Electrical Characteristics.
			Updated Table 3.8. ECP5/ECP5-5G Supply Current (Standby).
			Updated Table 3.11. sysI/O Recommended Operating Conditions.
			Updated Table 3.12. Single-Ended DC Characteristics.
			Updated Table 3.13. LVDS.
			Updated Table 3.14. LVDS25E DC Conditions.
			Updated Table 3.21. ECP5/ECP5-5G Maximum I/O Buffer Speed.
			Updated Table 3.28. Receiver Total Jitter Tolerance Specification.
			Updated header name of section 3.28 CPRI LV E.24/SGMII(2.5Gbps) Electrical and Timing Characteristics.
			Updated header name of section 3.29 Gigabit Ethernet/SGMII(1.25Gbps)/CPRI LV E.12 Electrical and Timing Characteristics
		Pinout Information	Updated table in section 4.3.2 LFE5U.
		Ordering Information	Added table rows in 5.2.1 Commercial.
			Added table rows in 5.2.2 Industrial.
		Supplemental Information	Updated For Further Information section.
November 2017	1.8	General Description	Updated Table 1.1. ECP5 and ECP5-5G Family Selection Guide. Added caBGA256 package in LFE5U-12 and LFE5U-25.

© 2014-2018 Lattice Semiconductor Corp. All Lattice trademarks, registered trademarks, patents, and disclaimers are as listed at www.latticesemi.com/legal.
All other brand or product names are trademarks or registered trademarks of their respective holders. The specifications and information herein are subject to change without notice.

(Continued)

Date	Version	Section	Change Summary
August 2014	1.2	DC and Switching Characteristics	SERDES High-Speed Data Receiver section. Updated Table 3.26. Serial Input Data Specifications, Table 3.28. Receiver Total Jitter Tolerance Specification, and Table 3.29. External Reference Clock Specification (refclkp/refclkn).
			Modified section heading to XXAUI/CPRI LV E.30 Electrical and Timing Characteristics. Updated Table 3.33 Transmit and Table 3.34. Receive and Jitter Tolerance.
			Modified section heading to CPRI LV E.24 Electrical and Timing Characteristics. Updated Table 3.35. Transmit and Table 3.36. Receive and Jitter Tolerance.
			Modified section heading to Gigabit Ethernet/SGMII/CPRI LV E.12 Electrical and Timing Characteristics. Updated Table 3.37. Transmit and Table 3.38. Receive and Jitter Tolerance.
June 2014	1.1	Ordering Information	Updated ECP5/ECP5-5G Part Number Description and Ordering Part Numbers sections.
March 2014	1.0	All	Initial release.

© 2014-2018 Lattice Semiconductor Corp. All Lattice trademarks, registered trademarks, patents, and disclaimers are as listed at www.latticesemi.com/legal.
All other brand or product names are trademarks or registered trademarks of their respective holders. The specifications and information herein are subject to change without notice.