Lattice Semiconductor Corporation - LFE3-17EA-6LFN484C Datasheet

Welcome to E-XFL.COM

Understanding Embedded - FPGAs (Field Programmable Gate Array)

Embedded - FPGAs, or Field Programmable Gate Arrays, are advanced integrated circuits that offer unparalleled flexibility and performance for digital systems. Unlike traditional fixed-function logic devices, FPGAs can be programmed and reprogrammed to execute a wide array of logical operations, enabling customized functionality tailored to specific applications. This reprogrammability allows developers to iterate designs quickly and implement complex functions without the need for custom hardware.

Applications of Embedded - FPGAs

The versatility of Embedded - FPGAs makes them indispensable in numerous fields. In telecommunications.

Details	
Product Status	Active
Number of LABs/CLBs	2125
Number of Logic Elements/Cells	17000
Total RAM Bits	716800
Number of I/O	222
Number of Gates	-
Voltage - Supply	1.14V ~ 1.26V
Mounting Type	Surface Mount
Operating Temperature	0°C ~ 85°C (TJ)
Package / Case	484-BBGA
Supplier Device Package	484-FPBGA (23x23)
Purchase URL	https://www.e-xfl.com/product-detail/lattice-semiconductor/lfe3-17ea-6lfn484c

LatticeECP3 Family Data Sheet Architecture

June 2013 Data Sheet DS1021

Architecture Overview

Each LatticeECP3 device contains an array of logic blocks surrounded by Programmable I/O Cells (PIC). Interspersed between the rows of logic blocks are rows of sysMEM™ Embedded Block RAM (EBR) and rows of sysDSP™ Digital Signal Processing slices, as shown in Figure 2-1. The LatticeECP3-150 has four rows of DSP slices; all other LatticeECP3 devices have two rows of DSP slices. In addition, the LatticeECP3 family contains SERDES Quads on the bottom of the device.

There are two kinds of logic blocks, the Programmable Functional Unit (PFU) and Programmable Functional Unit without RAM (PFF). The PFU contains the building blocks for logic, arithmetic, RAM and ROM functions. The PFF block contains building blocks for logic, arithmetic and ROM functions. Both PFU and PFF blocks are optimized for flexibility, allowing complex designs to be implemented quickly and efficiently. Logic Blocks are arranged in a two-dimensional array. Only one type of block is used per row.

The LatticeECP3 devices contain one or more rows of sysMEM EBR blocks. sysMEM EBRs are large, dedicated 18Kbit fast memory blocks. Each sysMEM block can be configured in a variety of depths and widths as RAM or ROM. In addition, LatticeECP3 devices contain up to two rows of DSP slices. Each DSP slice has multipliers and adder/accumulators, which are the building blocks for complex signal processing capabilities.

The LatticeECP3 devices feature up to 16 embedded 3.2 Gbps SERDES (Serializer / Deserializer) channels. Each SERDES channel contains independent 8b/10b encoding / decoding, polarity adjust and elastic buffer logic. Each group of four SERDES channels, along with its Physical Coding Sub-layer (PCS) block, creates a quad. The functionality of the SERDES/PCS quads can be controlled by memory cells set during device configuration or by registers that are addressable during device operation. The registers in every quad can be programmed via the SERDES Client Interface (SCI). These quads (up to four) are located at the bottom of the devices.

Each PIC block encompasses two PIOs (PIO pairs) with their respective sysI/O buffers. The sysI/O buffers of the LatticeECP3 devices are arranged in seven banks, allowing the implementation of a wide variety of I/O standards. In addition, a separate I/O bank is provided for the programming interfaces. 50% of the PIO pairs on the left and right edges of the device can be configured as LVDS transmit/receive pairs. The PIC logic also includes pre-engineered support to aid in the implementation of high speed source synchronous standards such as XGMII, 7:1 LVDS, along with memory interfaces including DDR3.

The LatticeECP3 registers in PFU and sysI/O can be configured to be SET or RESET. After power up and the device is configured, it enters into user mode with these registers SET/RESET according to the configuration setting, allowing the device entering to a known state for predictable system function.

Other blocks provided include PLLs, DLLs and configuration functions. The LatticeECP3 architecture provides two Delay Locked Loops (DLLs) and up to ten Phase Locked Loops (PLLs). The PLL and DLL blocks are located at the end of the EBR/DSP rows.

The configuration block that supports features such as configuration bit-stream decryption, transparent updates and dual-boot support is located toward the center of this EBR row. Every device in the LatticeECP3 family supports a sysCONFIG™ port located in the corner between banks one and two, which allows for serial or parallel device configuration.

In addition, every device in the family has a JTAG port. This family also provides an on-chip oscillator and soft error detect capability. The LatticeECP3 devices use 1.2 V as their core voltage.

© 2013 Lattice Semiconductor Corp. All Lattice trademarks, registered trademarks, patents, and disclaimers are as listed at www.latticesemi.com/legal. All other brand or product names are trademarks or registered trademarks of their respective holders. The specifications and information herein are subject to change without notice.

chain in order to better match the reference and feedback signals. This digital code from the ALU is also transmitted via the Digital Control bus (DCNTL) bus to its associated Slave Delay lines (two per DLL). The ALUHOLD input allows the user to suspend the ALU output at its current value. The UDDCNTL signal allows the user to latch the current value on the DCNTL bus.

The DLL has two clock outputs, CLKOP and CLKOS. These outputs can individually select one of the outputs from the tapped delay line. The CLKOS has optional fine delay shift and divider blocks to allow this output to be further modified, if required. The fine delay shift block allows the CLKOS output to phase shifted a further 45, 22.5 or 11.25 degrees relative to its normal position. Both the CLKOS and CLKOP outputs are available with optional duty cycle correction. Divide by two and divide by four frequencies are available at CLKOS. The LOCK output signal is asserted when the DLL is locked. Figure 2-5 shows the DLL block diagram and Table 2-5 provides a description of the DLL inputs and outputs.

The user can configure the DLL for many common functions such as time reference delay mode and clock injection removal mode. Lattice provides primitives in its design tools for these functions.

Figure 2-5. Delay Locked Loop Diagram (DLL)

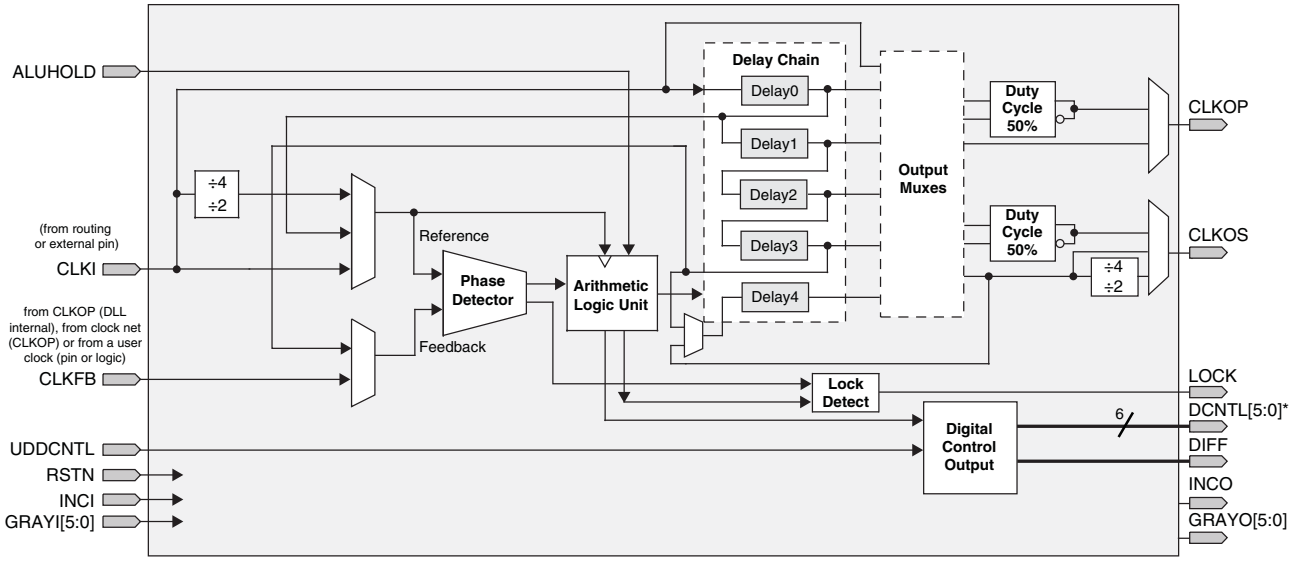

* This signal is not user accessible. This can only be used to feed the slave delay line.

Figure 2-10. Primary Clock Sources for LatticeECP3-35

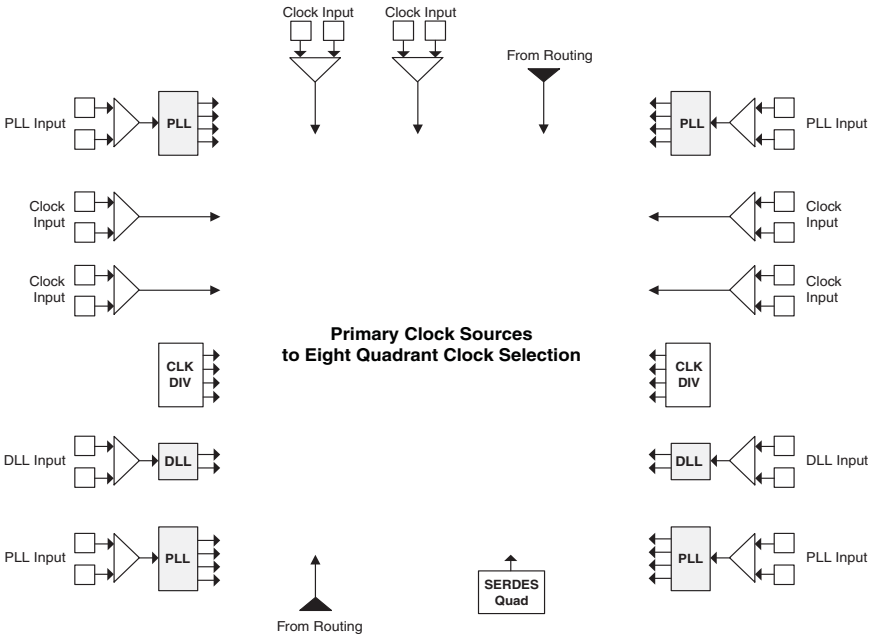

Note: Clock inputs can be configured in differential or single-ended mode.

Figure 2-11. Primary Clock Sources for LatticeECP3-70, -95, -150

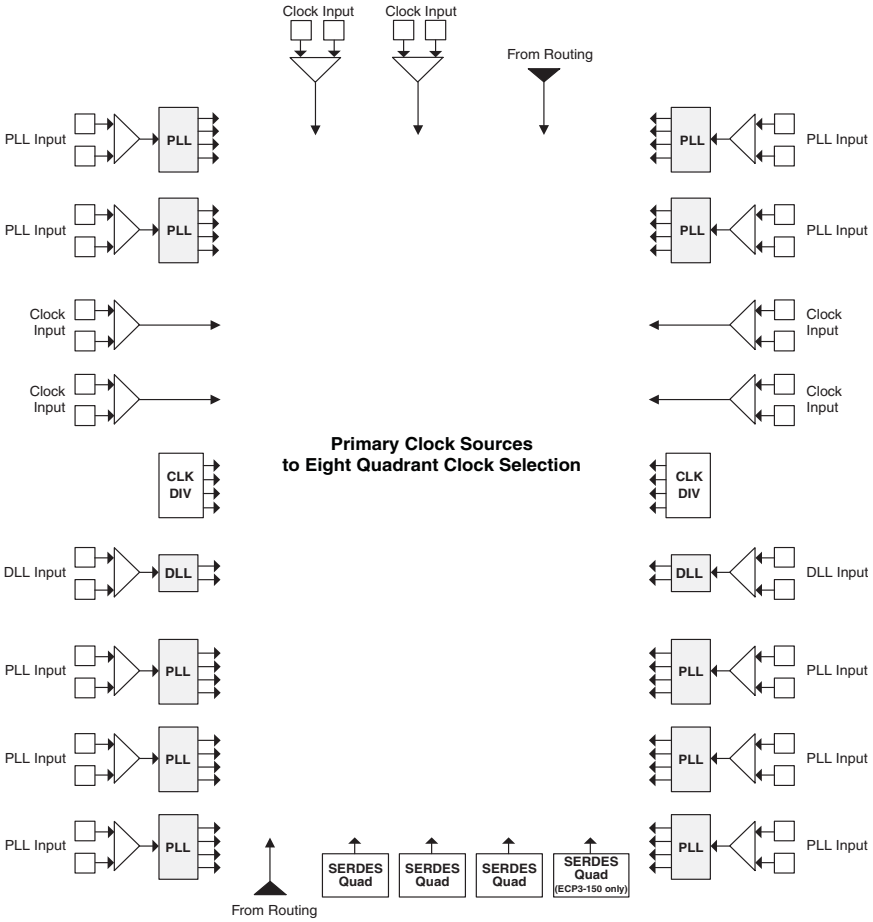

Note: Clock inputs can be configured in differential or single-ended mode.

Figure 2-37. DQS Local Bus

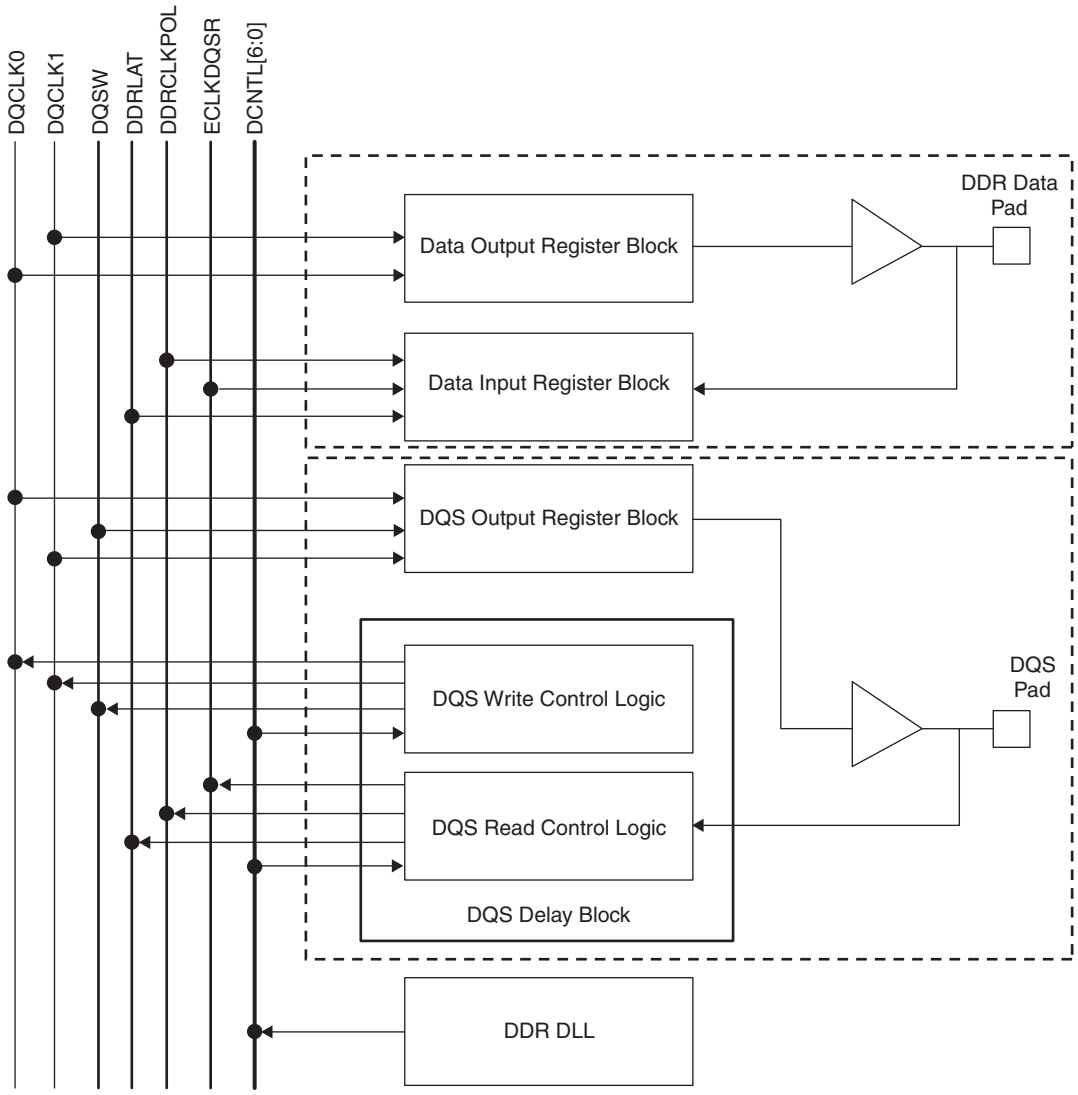

Polarity Control Logic

In a typical DDR Memory interface design, the phase relationship between the incoming delayed DQS strobe and the internal system clock (during the READ cycle) is unknown. The LatticeECP3 family contains dedicated circuits to transfer data between these domains. A clock polarity selector is used to prevent set-up and hold violations at the domain transfer between DQS (delayed) and the system clock. This changes the edge on which the data is registered in the synchronizing registers in the input register block. This requires evaluation at the start of each READ cycle for the correct clock polarity.

Prior to the READ operation in DDR memories, DQS is in tristate (pulled by termination). The DDR memory device drives DQS low at the start of the preamble state. A dedicated circuit detects the first DQS rising edge after the preamble state. This signal is used to control the polarity of the clock to the synchronizing registers.

DDR3 Memory Support

LatticeECP3 supports the read and write leveling required for DDR3 memory interfaces.

Read leveling is supported by the use of the DDRCLKPOL and the DDRLAT signals generated in the DQS Read Control logic block. These signals dynamically control the capture of the data with respect to the DQS at the input register block.

To accomplish write leveling in DDR3, each DQS group has a slightly different delay that is set by DYN DELAY[7:0] in the DQS Write Control logic block. The DYN DELAY can set 128 possible delay step settings. In addition, the most significant bit will invert the clock for a 180-degree shift of the incoming clock.

LatticeECP3 input and output registers can also support DDR gearing that is used to receive and transmit the high speed DDR data from and to the DDR3 Memory.

LatticeECP3 supports the 1.5V SSTL I/O standard required for the DDR3 memory interface. For more information, refer to the sysIO section of this data sheet.

Please see TN1180, LatticeECP3 High-Speed I/O Interface for more information on DDR Memory interface implementation in LatticeECP3.

sysI/O Buffer

Each I/O is associated with a flexible buffer referred to as a sysI/O buffer. These buffers are arranged around the periphery of the device in groups referred to as banks. The sysI/O buffers allow users to implement the wide variety of standards that are found in today's systems including LVDS, BLVDS, HSTL, SSTL Class I & II, LVCMOS, LVTTL, LVPECL, PCI.

sysI/O Buffer Banks

LatticeECP3 devices have six sysI/O buffer banks: six banks for user I/Os arranged two per side. The banks on the bottom side are wraparounds of the banks on the lower right and left sides. The seventh sysI/O buffer bank (Configuration Bank) is located adjacent to Bank 2 and has dedicated/shared I/Os for configuration. When a shared pin is not used for configuration it is available as a user I/O. Each bank is capable of supporting multiple I/O standards. Each sysI/O bank has its own I/O supply voltage (V_{CCIO}). In addition, each bank, except the Configuration Bank, has voltage references, V_{REF1} and V_{REF2}, which allow it to be completely independent from the others. Figure 2-38 shows the seven banks and their associated supplies.

In LatticeECP3 devices, single-ended output buffers and ratioed input buffers (LVTTL, LVCMOS and PCI) are powered using V_{CCIO}. LVTTL, LVCMOS33, LVCMOS25 and LVCMOS12 can also be set as fixed threshold inputs independent of V_{CCIO}.

Each bank can support up to two separate V_{REF} voltages, V_{REF1} and V_{REF2}, that set the threshold for the referenced input buffers. Some dedicated I/O pins in a bank can be configured to be a reference voltage supply pin. Each I/O is individually configurable based on the bank's supply and reference voltages.

Please see TN1177, LatticeECP3 sysIO Usage Guide for on-chip termination usage and value ranges.

Equalization Filter

Equalization filtering is available for single-ended inputs on both true and complementary I/Os, and for differential inputs on the true I/Os on the left, right, and top sides. Equalization is required to compensate for the difficulty of sampling alternating logic transitions with a relatively slow slew rate. It is considered the most useful for the Input DDRX2 modes, used in DDR3 memory, LVDS, or TRLVDS signaling. Equalization filter acts as a tunable filter with settings to determine the level of correction. In the LatticeECP3 devices, there are four settings available: 0 (none), 1, 2 and 3. The default setting is 0. The equalization logic resides in the sysI/O buffers, the two bits of setting is set uniquely in each input IOLOGIC block. Therefore, each sysI/O can have a unique equalization setting within a DQS-12 group.

Hot Socketing

LatticeECP3 devices have been carefully designed to ensure predictable behavior during power-up and power-down. During power-up and power-down sequences, the I/Os remain in tri-state until the power supply voltage is high enough to ensure reliable operation. In addition, leakage into I/O pins is controlled within specified limits. Please refer to the Hot Socketing Specifications in the DC and Switching Characteristics in this data sheet.

SERDES and PCS (Physical Coding Sublayer)

LatticeECP3 devices feature up to 16 channels of embedded SERDES/PCS arranged in quads at the bottom of the devices supporting up to 3.2Gbps data rate. Figure 2-40 shows the position of the quad blocks for the LatticeECP3-150 devices. Table 2-14 shows the location of available SERDES Quads for all devices.

The LatticeECP3 SERDES/PCS supports a range of popular serial protocols, including:

- PCI Express 1.1
- Ethernet (XAUI, GbE - 1000 Base CS/SX/LX and SGMII)
- Serial RapidIO
- SMPTE SDI (3G, HD, SD)
- CPRI
- SONET/SDH (STS-3, STS-12, STS-48)

Each quad contains four dedicated SERDES for high speed, full duplex serial data transfer. Each quad also has a PCS block that interfaces to the SERDES channels and contains protocol specific digital logic to support the standards listed above. The PCS block also contains interface logic to the FPGA fabric. All PCS logic for dedicated protocol support can also be bypassed to allow raw 8-bit or 10-bit interfaces to the FPGA fabric.

Even though the SERDES/PCS blocks are arranged in quads, multiple baud rates can be supported within a quad with the use of dedicated, per channel ÷1, ÷2 and ÷11 rate dividers. Additionally, multiple quads can be arranged together to form larger data pipes.

For information on how to use the SERDES/PCS blocks to support specific protocols, as well on how to combine multiple protocols and baud rates within a device, please refer to TN1176, LatticeECP3 SERDES/PCS Usage Guide.

Table 2-14. Available SERDES Quads per LatticeECP3 Devices

Package	ECP3-17	ECP3-35	ECP3-70	ECP3-95	ECP3-150
256 ftBGA	1	1	—	—	—
328 csBGA	2 channels	—	—	—	—
484 fpBGA	1	1	1	1	
672 fpBGA	—	1	2	2	2
1156 fpBGA	—	—	3	3	4

SERDES Block

A SERDES receiver channel may receive the serial differential data stream, equalize the signal, perform Clock and Data Recovery (CDR) and de-serialize the data stream before passing the 8- or 10-bit data to the PCS logic. The SERDES transmitter channel may receive the parallel 8- or 10-bit data, serialize the data and transmit the serial bit stream through the differential drivers. Figure 2-41 shows a single-channel SERDES/PCS block. Each SERDES channel provides a recovered clock and a SERDES transmit clock to the PCS block and to the FPGA core logic.

Each transmit channel, receiver channel, and SERDES PLL shares the same power supply (VCCA). The output and input buffers of each channel have their own independent power supplies (VCCOB and VCCIB).

Figure 2-41. Simplified Channel Block Diagram for SERDES/PCS Block

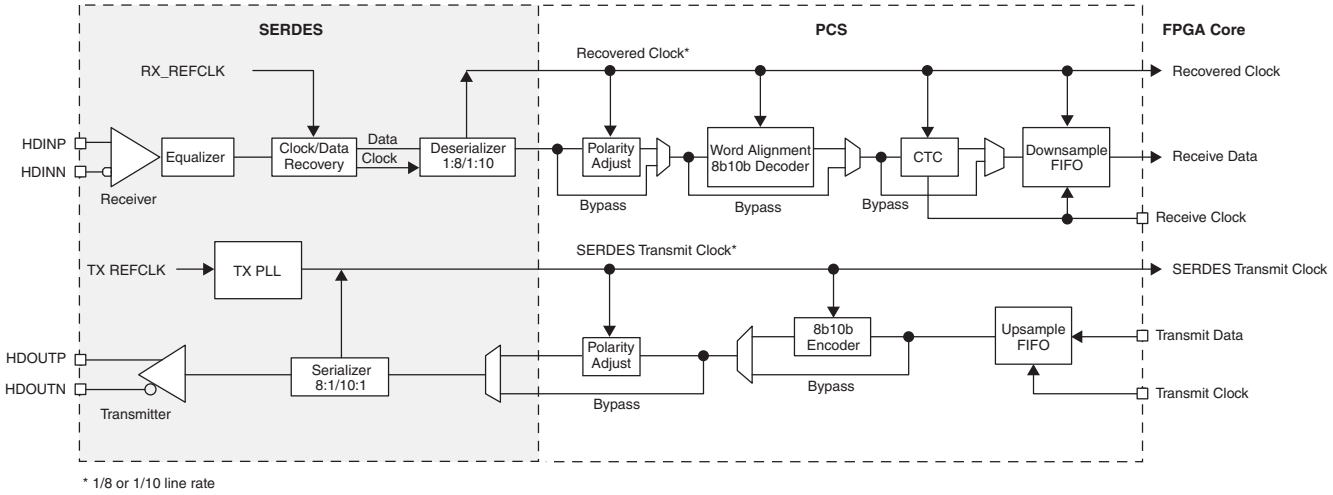

PCS

As shown in Figure 2-41, the PCS receives the parallel digital data from the deserializer and selects the polarity, performs word alignment, decodes (8b/10b), provides Clock Tolerance Compensation and transfers the clock domain from the recovered clock to the FPGA clock via the Down Sample FIFO.

For the transmit channel, the PCS block receives the parallel data from the FPGA core, encodes it with 8b/10b, selects the polarity and passes the 8/10 bit data to the transmit SERDES channel.

The PCS also provides bypass modes that allow a direct 8-bit or 10-bit interface from the SERDES to the FPGA logic. The PCS interface to the FPGA can also be programmed to run at 1/2 speed for a 16-bit or 20-bit interface to the FPGA logic.

SCI (SERDES Client Interface) Bus

The SERDES Client Interface (SCI) is an IP interface that allows the SERDES/PCS Quad block to be controlled by registers rather than the configuration memory cells. It is a simple register configuration interface that allows SERDES/PCS configuration without power cycling the device.

The Diamond and ispLEVER design tools support all modes of the PCS. Most modes are dedicated to applications associated with a specific industry standard data protocol. Other more general purpose modes allow users to define their own operation. With these tools, the user can define the mode for each quad in a design.

Popular standards such as 10Gb Ethernet, x4 PCI Express and 4x Serial RapidIO can be implemented using IP (available through Lattice), a single quad (Four SERDES channels and PCS) and some additional logic from the core.

The LatticeECP3 family also supports a wide range of primary and secondary protocols. Within the same quad, the LatticeECP3 family can support mixed protocols with semi-independent clocking as long as the required clock frequencies are integer x1, x2, or x11 multiples of each other. Table 2-15 lists the allowable combination of primary and secondary protocol combinations.

Flexible Quad SERDES Architecture

The LatticeECP3 family SERDES architecture is a quad-based architecture. For most SERDES settings and standards, the whole quad (consisting of four SERDES) is treated as a unit. This helps in silicon area savings, better utilization and overall lower cost.

However, for some specific standards, the LatticeECP3 quad architecture provides flexibility; more than one standard can be supported within the same quad.

Table 2-15 shows the standards can be mixed and matched within the same quad. In general, the SERDES standards whose nominal data rates are either the same or a defined subset of each other, can be supported within the same quad. In Table 2-15, the Primary Protocol column refers to the standard that determines the reference clock and PLL settings. The Secondary Protocol column shows the other standard that can be supported within the same quad.

Furthermore, Table 2-15 also implies that more than two standards in the same quad can be supported, as long as they conform to the data rate and reference clock requirements. For example, a quad may contain PCI Express 1.1, SGMII, Serial RapidIO Type I and Serial RapidIO Type II, all in the same quad.

Table 2-15. LatticeECP3 Primary and Secondary Protocol Support

Primary Protocol	Secondary Protocol
PCI Express 1.1	SGMII
PCI Express 1.1	Gigabit Ethernet
PCI Express 1.1	Serial RapidIO Type I
PCI Express 1.1	Serial RapidIO Type II
Serial RapidIO Type I	SGMII
Serial RapidIO Type I	Gigabit Ethernet
Serial RapidIO Type II	SGMII
Serial RapidIO Type II	Gigabit Ethernet
Serial RapidIO Type II	Serial RapidIO Type I
CPRI-3	CPRI-2 and CPRI-1
3G-SDI	HD-SDI and SD-SDI

There are some restrictions to be aware of when using spread spectrum. When a quad shares a PCI Express x1 channel with a non-PCI Express channel, ensure that the reference clock for the quad is compatible with all protocols within the quad. For example, a PCI Express spread spectrum reference clock is not compatible with most Gigabit Ethernet applications because of tight CTC ppm requirements.

While the LatticeECP3 architecture will allow the mixing of a PCI Express channel and a Gigabit Ethernet, Serial RapidIO or SGMII channel within the same quad, using a PCI Express spread spectrum clocking as the transmit reference clock will cause a violation of the Gigabit Ethernet, Serial RapidIO and SGMII transmit jitter specifications.

For further information on SERDES, please see TN1176, LatticeECP3 SERDES/PCS Usage Guide.

IEEE 1149.1-Compliant Boundary Scan Testability

All LatticeECP3 devices have boundary scan cells that are accessed through an IEEE 1149.1 compliant Test Access Port (TAP). This allows functional testing of the circuit board on which the device is mounted through a serial scan path that can access all critical logic nodes. Internal registers are linked internally, allowing test data to be shifted in and loaded directly onto test nodes, or test data to be captured and shifted out for verification. The test access port consists of dedicated I/Os: TDI, TDO, TCK and TMS. The test access port has its own supply voltage V_{CCJ} and can operate with LVCMOS3.3, 2.5, 1.8, 1.5 and 1.2 standards.

For more information, please see TN1169, LatticeECP3 sysCONFIG Usage Guide.

Device Configuration

All LatticeECP3 devices contain two ports that can be used for device configuration. The Test Access Port (TAP), which supports bit-wide configuration, and the sysCONFIG port, support dual-byte, byte and serial configuration. The TAP supports both the IEEE Standard 1149.1 Boundary Scan specification and the IEEE Standard 1532 In-System Configuration specification. The sysCONFIG port includes seven I/Os used as dedicated pins with the remaining pins used as dual-use pins. See TN1169, LatticeECP3 sysCONFIG Usage Guide for more information about using the dual-use pins as general purpose I/Os.

There are various ways to configure a LatticeECP3 device:

1. JTAG
2. Standard Serial Peripheral Interface (SPI and SPIm modes) - interface to boot PROM memory
3. System microprocessor to drive a x8 CPU port (PCM mode)
4. System microprocessor to drive a serial slave SPI port (SSPI mode)
5. Generic byte wide flash with a MachXO™ device, providing control and addressing

On power-up, the FPGA SRAM is ready to be configured using the selected sysCONFIG port. Once a configuration port is selected, it will remain active throughout that configuration cycle. The IEEE 1149.1 port can be activated any time after power-up by sending the appropriate command through the TAP port.

LatticeECP3 devices also support the Slave SPI Interface. In this mode, the FPGA behaves like a SPI Flash device (slave mode) with the SPI port of the FPGA to perform read-write operations.

SERDES Power Supply Requirements[1, 2, 3]

Over Recommended Operating Conditions

Symbol	Description	Typ.	Max.	Units
Standby (Power Down)				
I_{CCA-SB}	V_{CCA} current (per channel)	3	5	mA
$I_{CCIB-SB}$	Input buffer current (per channel)	—	—	mA
$I_{CCOB-SB}$	Output buffer current (per channel)	—	—	mA
Operating (Data Rate = 3.2 Gbps)				
I_{CCA-OP}	V_{CCA} current (per channel)	68	77	mA
$I_{CCIB-OP}$	Input buffer current (per channel)	5	7	mA
$I_{CCOB-OP}$	Output buffer current (per channel)	19	25	mA
Operating (Data Rate = 2.5 Gbps)				
I_{CCA-OP}	V_{CCA} current (per channel)	66	76	mA
$I_{CCIB-OP}$	Input buffer current (per channel)	4	5	mA
$I_{CCOB-OP}$	Output buffer current (per channel)	15	18	mA
Operating (Data Rate = 1.25 Gbps)				
I_{CCA-OP}	V_{CCA} current (per channel)	62	72	mA
$I_{CCIB-OP}$	Input buffer current (per channel)	4	5	mA
$I_{CCOB-OP}$	Output buffer current (per channel)	15	18	mA
Operating (Data Rate = 250 Mbps)				
I_{CCA-OP}	V_{CCA} current (per channel)	55	65	mA
$I_{CCIB-OP}$	Input buffer current (per channel)	4	5	mA
$I_{CCOB-OP}$	Output buffer current (per channel)	14	17	mA
Operating (Data Rate = 150 Mbps)				
I_{CCA-OP}	V_{CCA} current (per channel)	55	65	mA
$I_{CCIB-OP}$	Input buffer current (per channel)	4	5	mA
$I_{CCOB-OP}$	Output buffer current (per channel)	14	17	mA

1. Equalization enabled, pre-emphasis disabled.
2. One quarter of the total quad power (includes contribution from common circuits, all channels in the quad operating, pre-emphasis disabled, equalization enabled).
3. Pre-emphasis adds 20 mA to ICCA-OP data.

LVDS25E

The top and bottom sides of LatticeECP3 devices support LVDS outputs via emulated complementary LVCMOS outputs in conjunction with a parallel resistor across the driver outputs. The scheme shown in Figure 3-1 is one possible solution for point-to-point signals.

Figure 3-1. LVDS25E Output Termination Example

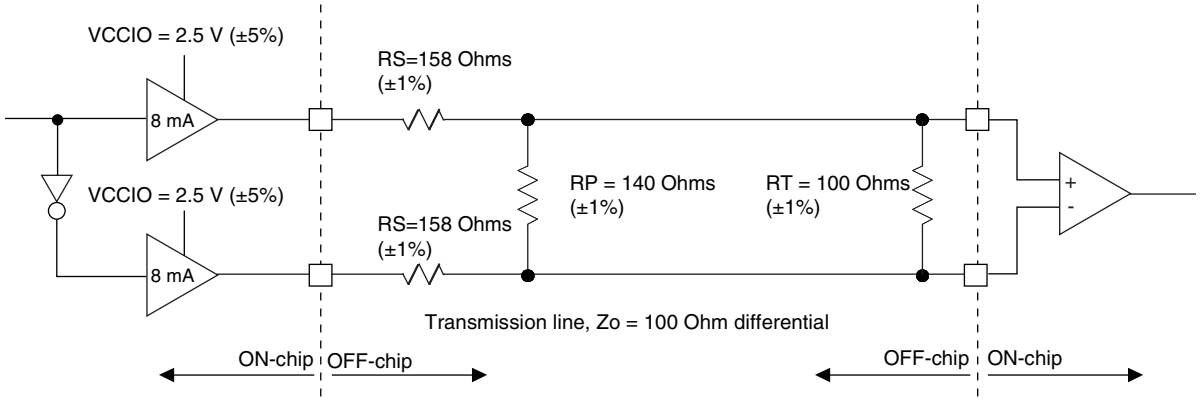

Table 3-1. LVDS25E DC Conditions

Parameter	Description	Typical	Units
V_{CCIO}	Output Driver Supply (+/–5%)	2.50	V
Z_{OUT}	Driver Impedance	20	Ω
R_S	Driver Series Resistor (+/–1%)	158	Ω
R_P	Driver Parallel Resistor (+/–1%)	140	Ω
R_T	Receiver Termination (+/–1%)	100	Ω
V_{OH}	Output High Voltage	1.43	V
V_{OL}	Output Low Voltage	1.07	V
V_{OD}	Output Differential Voltage	0.35	V
V_{CM}	Output Common Mode Voltage	1.25	V
Z_{BACK}	Back Impedance	100.5	Ω
I_{DC}	DC Output Current	6.03	mA

LVCMOS33D

All I/O banks support emulated differential I/O using the LVCMOS33D I/O type. This option, along with the external resistor network, provides the system designer the flexibility to place differential outputs on an I/O bank with 3.3 V V_{CCIO}. The default drive current for LVCMOS33D output is 12 mA with the option to change the device strength to 4 mA, 8 mA, 16 mA or 20 mA. Follow the LVCMOS33 specifications for the DC characteristics of the LVCMOS33D.

BLVDS25

The LatticeECP3 devices support the BLVDS standard. This standard is emulated using complementary LVCMOS outputs in conjunction with a parallel external resistor across the driver outputs. BLVDS is intended for use when multi-drop and bi-directional multi-point differential signaling is required. The scheme shown in Figure 3-2 is one possible solution for bi-directional multi-point differential signals.

Figure 3-2. BLVDS25 Multi-point Output Example

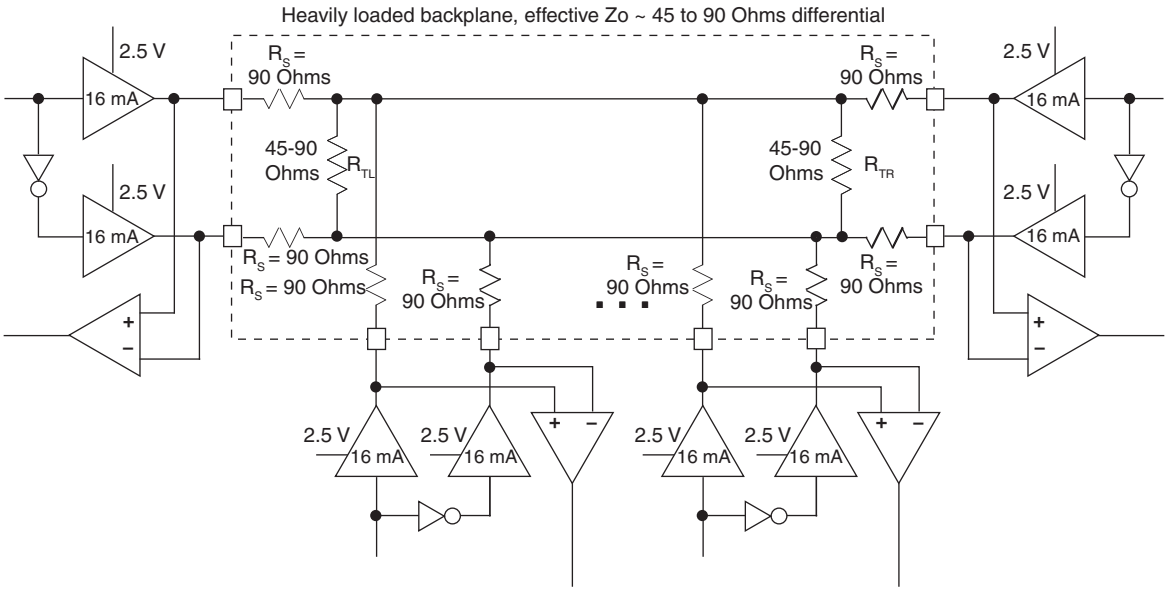

Table 3-2. BLVDS25 DC Conditions[1]

Over Recommended Operating Conditions

Parameter	Description	Typical		Units
		Zo = 45Ω	Zo = 90Ω	
V_{CCIO}	Output Driver Supply (+/– 5%)	2.50	2.50	V
Z_{OUT}	Driver Impedance	10.00	10.00	Ω
R_S	Driver Series Resistor (+/– 1%)	90.00	90.00	Ω
R_{TL}	Driver Parallel Resistor (+/– 1%)	45.00	90.00	Ω
R_{TR}	Receiver Termination (+/– 1%)	45.00	90.00	Ω
V_{OH}	Output High Voltage	1.38	1.48	V
V_{OL}	Output Low Voltage	1.12	1.02	V
V_{OD}	Output Differential Voltage	0.25	0.46	V
V_{CM}	Output Common Mode Voltage	1.25	1.25	V
I_{DC}	DC Output Current	11.24	10.20	mA

1. For input buffer, see LVDS table.

Typical Building Block Function Performance

Pin-to-Pin Performance (LVCMOS25 12 mA Drive)[1, 2, 3]

Function	–8 Timing	Units
Basic Functions		
16-bit Decoder	4.7	ns
32-bit Decoder	4.7	ns
64-bit Decoder	5.7	ns
4:1 MUX	4.1	ns
8:1 MUX	4.3	ns
16:1 MUX	4.7	ns
32:1 MUX	4.8	ns

1. These functions were generated using the ispLEVER design tool. Exact performance may vary with device and tool version. The tool uses internal parameters that have been characterized but are not tested on every device.
2. Commercial timing numbers are shown. Industrial numbers are typically slower and can be extracted from the Diamond or ispLEVER software.

Register-to-Register Performance[1, 2, 3]

Function	–8 Timing	Units
Basic Functions		
16-bit Decoder	500	MHz
32-bit Decoder	500	MHz
64-bit Decoder	500	MHz
4:1 MUX	500	MHz
8:1 MUX	500	MHz
16:1 MUX	500	MHz
32:1 MUX	445	MHz
8-bit adder	500	MHz
16-bit adder	500	MHz
64-bit adder	305	MHz
16-bit counter	500	MHz
32-bit counter	460	MHz
64-bit counter	320	MHz
64-bit accumulator	315	MHz
Embedded Memory Functions		
512x36 Single Port RAM, EBR Output Registers	340	MHz
1024x18 True-Dual Port RAM (Write Through or Normal, EBR Output Registers)	340	MHz
1024x18 True-Dual Port RAM (Read-Before-Write, EBR Output Registers	130	MHz
1024x18 True-Dual Port RAM (Write Through or Normal, PLC Output Registers)	245	MHz
Distributed Memory Functions		
16x4 Pseudo-Dual Port RAM (One PFU)	500	MHz
32x4 Pseudo-Dual Port RAM	500	MHz
64x8 Pseudo-Dual Port RAM	400	MHz
DSP Function		
18x18 Multiplier (All Registers)	400	MHz
9x9 Multiplier (All Registers)	400	MHz
36x36 Multiply (All Registers)	260	MHz