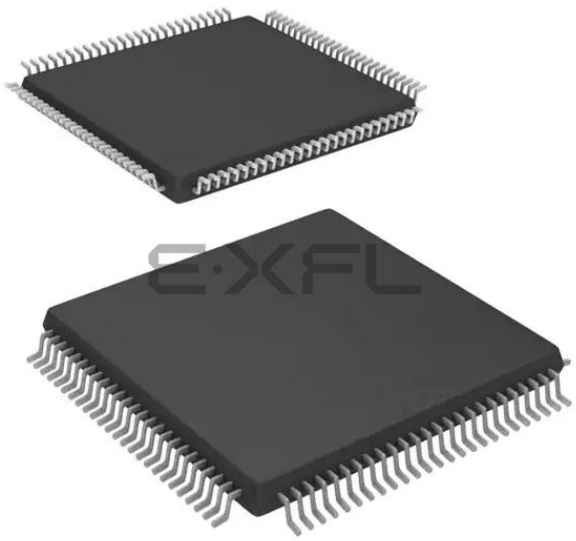

Welcome to E-XFL.COM

What is "Embedded - Microcontrollers"?

"Embedded - Microcontrollers" refer to small, integrated circuits designed to perform specific tasks within larger systems. These microcontrollers are essentially compact computers on a single chip, containing a processor core, memory, and programmable input/output peripherals. They are called "embedded" because they are embedded within electronic devices to control various functions, rather than serving as standalone computers. Microcontrollers are crucial in modern electronics, providing the intelligence and control needed for a wide range of applications.

Applications of "Embedded - Microcontrollers"

Details	
Product Status	Active
Core Processor	ARM® Cortex®-M4
Core Size	32-Bit Single-Core
Speed	72MHz
Connectivity	CANbus, EBI/EMI, I²C, IrDA, LINbus, SmartCard, SPI, UART/USART
Peripherals	Brown-out Detect/Reset, DMA, LCD, POR, PWM, WDT
Number of I/O	83
Program Memory Size	2MB (2M x 8)
Program Memory Type	FLASH
EEPROM Size	-
RAM Size	384K x 8
Voltage - Supply (Vcc/Vdd)	1.8V ~ 3.8V
Data Converters	A/D 16x12b SAR; D/A 2x12b
Oscillator Type	Internal
Operating Temperature	-40°C ~ 125°C (TA)
Mounting Type	Surface Mount
Package / Case	100-TQFP
Supplier Device Package	100-TQFP (14x14)
Purchase URL	https://www.e-xfl.com/product-detail/silicon-labs/efm32gg11b510f2048iq100-b

2. Ordering Information

Table 2.1. Ordering Information

Ordering Code	Flash (kB)	RAM (kB)	DC-DC Converter	USB	Ethernet	QSPI	SDIO	LCD	GPIO	Package	Temp Range
EFM32GG11B820F2048GL192-A	2048	512	Yes	Yes	Yes	Yes	Yes	Yes	144	BGA192	-40 to +85°C
EFM32GG11B840F1024GL192-A	1024	512	Yes	Yes	Yes	Yes	Yes	Yes	144	BGA192	-40 to +85°C
EFM32GG11B820F2048GL152-A	2048	512	Yes	Yes	Yes	Yes	Yes	Yes	121	BGA152	-40 to +85°C
EFM32GG11B820F2048IL152-A	2048	512	Yes	Yes	Yes	Yes	Yes	Yes	121	BGA152	-40 to +125°C
EFM32GG11B840F1024GL152-A	1024	512	Yes	Yes	Yes	Yes	Yes	Yes	121	BGA152	-40 to +85°C
EFM32GG11B840F1024IL152-A	1024	512	Yes	Yes	Yes	Yes	Yes	Yes	121	BGA152	-40 to +125°C
EFM32GG11B820F2048GL120-A	2048	512	Yes	Yes	Yes	Yes	Yes	Yes	95	BGA120	-40 to +85°C
EFM32GG11B820F2048IL120-A	2048	512	Yes	Yes	Yes	Yes	Yes	Yes	95	BGA120	-40 to +125°C
EFM32GG11B840F1024GL120-A	1024	512	Yes	Yes	Yes	Yes	Yes	Yes	95	BGA120	-40 to +85°C
EFM32GG11B840F1024IL120-A	1024	512	Yes	Yes	Yes	Yes	Yes	Yes	95	BGA120	-40 to +125°C
EFM32GG11B820F2048GQ100-A	2048	512	Yes	Yes	Yes	Yes	Yes	Yes	80	QFP100	-40 to +85°C
EFM32GG11B820F2048IQ100-A	2048	512	Yes	Yes	Yes	Yes	Yes	Yes	80	QFP100	-40 to +125°C
EFM32GG11B840F1024GQ100-A	1024	512	Yes	Yes	Yes	Yes	Yes	Yes	80	QFP100	-40 to +85°C
EFM32GG11B840F1024IQ100-A	1024	512	Yes	Yes	Yes	Yes	Yes	Yes	80	QFP100	-40 to +125°C
EFM32GG11B820F2048GQ64-A	2048	512	Yes	Yes	Yes	Yes	Yes	Yes	47	QFP64	-40 to +85°C
EFM32GG11B820F2048GM64-A	2048	512	Yes	Yes	Yes	Yes	Yes	Yes	50	QFN64	-40 to +85°C
EFM32GG11B820F2048IQ64-A	2048	512	Yes	Yes	Yes	Yes	Yes	Yes	47	QFP64	-40 to +125°C
EFM32GG11B820F2048IM64-A	2048	512	Yes	Yes	Yes	Yes	Yes	Yes	50	QFN64	-40 to +125°C
EFM32GG11B840F1024GQ64-A	1024	512	Yes	Yes	Yes	Yes	Yes	Yes	47	QFP64	-40 to +85°C
EFM32GG11B840F1024GM64-A	1024	512	Yes	Yes	Yes	Yes	Yes	Yes	50	QFN64	-40 to +85°C
EFM32GG11B840F1024IQ64-A	1024	512	Yes	Yes	Yes	Yes	Yes	Yes	47	QFP64	-40 to +125°C
EFM32GG11B840F1024IM64-A	1024	512	Yes	Yes	Yes	Yes	Yes	Yes	50	QFN64	-40 to +125°C
EFM32GG11B520F2048GL120-A	2048	512	Yes	No	No	No	No	Yes	95	BGA120	-40 to +85°C
EFM32GG11B510F2048GL120-A	2048	384	Yes	No	No	No	No	Yes	95	BGA120	-40 to +85°C
EFM32GG11B520F2048IL120-A	2048	512	Yes	No	No	No	No	Yes	95	BGA120	-40 to +125°C
EFM32GG11B510F2048IL120-A	2048	384	Yes	No	No	No	No	Yes	95	BGA120	-40 to +125°C
EFM32GG11B520F2048GQ100-A	2048	512	Yes	No	No	No	No	Yes	83	QFP100	-40 to +85°C
EFM32GG11B510F2048GQ100-A	2048	384	Yes	No	No	No	No	Yes	83	QFP100	-40 to +85°C
EFM32GG11B520F2048IQ100-A	2048	512	Yes	No	No	No	No	Yes	83	QFP100	-40 to +125°C
EFM32GG11B510F2048IQ100-A	2048	384	Yes	No	No	No	No	Yes	83	QFP100	-40 to +125°C

4.1.10.5 Auxiliary High-Frequency RC Oscillator (AUXHFRCO)

Table 4.16. Auxiliary High-Frequency RC Oscillator (AUXHFRCO)

Parameter	Symbol	Test Condition	Min	Typ	Max	Unit
Frequency accuracy	$f_{AUXHFRCO_ACC}$	At production calibrated frequencies, across supply voltage and temperature	TBD	—	TBD	%
Start-up time	$t_{AUXHFRCO}$	$f_{AUXHFRCO} \geq 19$ MHz	—	400	—	ns
		$4 < f_{AUXHFRCO} < 19$ MHz	—	1.4	—	µs
		$f_{AUXHFRCO} \leq 4$ MHz	—	2.5	—	µs
Current consumption on all supplies	$I_{AUXHFRCO}$	$f_{AUXHFRCO} = 50$ MHz	—	289	TBD	µA
		$f_{AUXHFRCO} = 48$ MHz	—	276	TBD	µA
		$f_{AUXHFRCO} = 38$ MHz	—	227	TBD	µA
		$f_{AUXHFRCO} = 32$ MHz	—	186	TBD	µA
		$f_{AUXHFRCO} = 26$ MHz	—	158	TBD	µA
		$f_{AUXHFRCO} = 19$ MHz	—	126	TBD	µA
		$f_{AUXHFRCO} = 16$ MHz	—	114	TBD	µA
		$f_{AUXHFRCO} = 13$ MHz	—	88	TBD	µA
		$f_{AUXHFRCO} = 7$ MHz	—	59	TBD	µA
		$f_{AUXHFRCO} = 4$ MHz	—	33	TBD	µA
		$f_{AUXHFRCO} = 2$ MHz	—	28	TBD	µA
		$f_{AUXHFRCO} = 1$ MHz	—	26	TBD	µA
Coarse trim step size (% of period)	$SS_{AUXHFRCO_COARSE}$		—	0.8	—	%
Fine trim step size (% of period)	$SS_{AUXHFRCO_FINE}$		—	0.1	—	%
Period jitter	$PJ_{AUXHFRCO}$		—	0.2	—	% RMS

Parameter	Symbol	Test Condition	Min	Typ	Max	Unit
ADC clock frequency	f_{ADCCLK}		—	—	16	MHz
Throughput rate	$f_{ADCRATE}$		—	—	1	Msps
Conversion time[1]	$t_{ADCCONV}$	6 bit	—	7	—	cycles
		8 bit	—	9	—	cycles
		12 bit	—	13	—	cycles
Startup time of reference generator and ADC core	$t_{ADCSTART}$	WARMUPMODE[4] = NORMAL	—	—	5	µs
		WARMUPMODE[4] = KEEPIN-STANDBY	—	—	2	µs
		WARMUPMODE[4] = KEEPINSLO-WACC	—	—	1	µs
SNDR at 1Msps and f_{IN} = 10kHz	$SNDR_{ADC}$	Internal reference[7], differential measurement	TBD	67	—	dB
		External reference[6], differential measurement	—	68	—	dB
Spurious-free dynamic range (SFDR)	$SFDR_{ADC}$	1 MSamples/s, 10 kHz full-scale sine wave	—	75	—	dB
Differential non-linearity (DNL)	DNL_{ADC}	12 bit resolution, No missing co-des	TBD	—	TBD	LSB
Integral non-linearity (INL), End point method	INL_{ADC}	12 bit resolution	TBD	—	TBD	LSB
Offset error	$V_{ADCOFFSETERR}$		TBD	0	TBD	LSB
Gain error in ADC	$V_{ADCGAIN}$	Using internal reference	—	-0.2	TBD	%
		Using external reference	—	-1	—	%
Temperature sensor slope	V_{TS_SLOPE}		—	-1.84	—	mV/°C

Note:

1. Derived from ADCCLK.
2. PSRR is referenced to AVDD when ANASW=0 and to DVDD when ANASW=1 in EMU_PWRCTRL.
3. In ADCn_BIASPROG register.
4. In ADCn_CNTL register.
5. The absolute voltage allowed at any ADC input is dictated by the power rail supplied to on-chip circuitry, and may be lower than the effective full scale voltage. All ADC inputs are limited to the ADC supply (AVDD or DVDD depending on EMU_PWRCTRL_ANASW). Any ADC input routed through the APORT will further be limited by the IOVDD supply to the pin.
6. External reference is 1.25 V applied externally to ADCnEXTREFP, with the selection CONF in the SINGLECTRL_REF or SCANCTRL_REF register field and VREFP in the SINGLECTRLX_VREFSEL or SCANCTRLX_VREFSEL field. The differential input range with this configuration is ± 1.25 V.
7. Internal reference option used corresponds to selection 2V5 in the SINGLECTRL_REF or SCANCTRL_REF register field. The differential input range with this configuration is ± 1.25 V. Typical value is characterized using full-scale sine wave input. Minimum value is production-tested using sine wave input at 1.5 dB lower than full scale.

Parameter	Symbol	Test Condition	Min	Typ	Max	Unit
Hysteresis (V_{CM} = 1.25 V, BIASPROG[4] = 0x10, FULL-BIAS[4] = 1)	$V_{ACMPHYST}$	HYSTSEL[5] = HYST0	TBD	0	TBD	mV
		HYSTSEL[5] = HYST1	TBD	18	TBD	mV
		HYSTSEL[5] = HYST2	TBD	33	TBD	mV
		HYSTSEL[5] = HYST3	TBD	46	TBD	mV
		HYSTSEL[5] = HYST4	TBD	57	TBD	mV
		HYSTSEL[5] = HYST5	TBD	68	TBD	mV
		HYSTSEL[5] = HYST6	TBD	79	TBD	mV
		HYSTSEL[5] = HYST7	TBD	90	TBD	mV
		HYSTSEL[5] = HYST8	TBD	0	TBD	mV
		HYSTSEL[5] = HYST9	TBD	-18	TBD	mV
		HYSTSEL[5] = HYST10	TBD	-33	TBD	mV
		HYSTSEL[5] = HYST11	TBD	-45	TBD	mV
		HYSTSEL[5] = HYST12	TBD	-57	TBD	mV
		HYSTSEL[5] = HYST13	TBD	-67	TBD	mV
		HYSTSEL[5] = HYST14	TBD	-78	TBD	mV
		HYSTSEL[5] = HYST15	TBD	-88	TBD	mV
Comparator delay[3]	$t_{ACMPDELAY}$	BIASPROG[4] = 1, FULLBIAS[4] = 0	—	30	—	µs
		BIASPROG[4] = 0x10, FULLBIAS[4] = 0	—	3.7	—	µs
		BIASPROG[4] = 0x02, FULLBIAS[4] = 1	—	360	—	ns
		BIASPROG[4] = 0x20, FULLBIAS[4] = 1	—	35	—	ns
Offset voltage	$V_{ACMPOFFSET}$	BIASPROG[4] =0x10, FULLBIAS[4] = 1	TBD	—	TBD	mV
Reference voltage	$V_{ACMPREF}$	Internal 1.25 V reference	TBD	1.25	TBD	V
		Internal 2.5 V reference	TBD	2.5	TBD	V
Capacitive sense internal re-sistance	R_{CSRES}	CSRESSEL[6] = 0	—	infinite	—	kΩ
		CSRESSEL[6] = 1	—	15	—	kΩ
		CSRESSEL[6] = 2	—	27	—	kΩ
		CSRESSEL[6] = 3	—	39	—	kΩ
		CSRESSEL[6] = 4	—	51	—	kΩ
		CSRESSEL[6] = 5	—	100	—	kΩ
		CSRESSEL[6] = 6	—	162	—	kΩ
		CSRESSEL[6] = 7	—	235	—	kΩ

Parameter	Symbol	Test Condition	Min	Typ	Max	Unit
Supply current, continuous conversions, WARMUP-MODE=KEEPCSENWARM	I_{CSEN_ACTIVE}	SAR or Delta Modulation conversions of 33 pF capacitor, CS0CG=0 (Gain = 10x), always on	—	90.5	—	µA
HFPERCLK supply current	$I_{CSEN_HFPERCLK}$	Current contribution from HFPERCLK when clock to CSEN block is enabled.	—	2.25	—	µA/MHz

Note:

1. Current is specified with a total external capacitance of 33 pF per channel. Average current is dependent on how long the module is actively sampling channels within the scan period, and scales with the number of samples acquired. Supply current for a specific application can be estimated by multiplying the current per sample by the total number of samples per period (total_current = single_sample_current * (number_of_channels * accumulation)).

EBI Read Enable Output Timing

Timing applies to both EBI_REn and EBI_NANDREn for all addressing modes and both polarities. Output timing for EBI_AD applies only to multiplexed addressing modes D8A24ALE and D16A16ALE. All numbers are based on route locations 0,1,2 only (with all EBI alternate functions using the same location at the same time). Timing is specified at 10% and 90% of IOVDD, 25 pF external loading, and slew rate for all GPIO set to 6.

Table 4.38. EBI Read Enable Output Timing

Parameter	Symbol	Test Condition	Min	Typ	Max	Unit
Output hold time, from trailing EBI_REn / EBI_NANDREn edge to EBI_AD, EBI_A, EBI_CSn, EBI_BLn invalid	t_{OH_REn}	IOVDD ≥ 1.62 V	-23 + (RDHOLD * $t_{HFCORECLK}$)	—	—	ns
		IOVDD ≥ 3.0 V	-13 + (RDHOLD * $t_{HFCORECLK}$)	—	—	ns
Output setup time, from EBI_AD, EBI_A, EBI_CSn, EBI_BLn valid to leading EBI_REn / EBI_NANDREn edge [1]	t_{OSU_REn}	IOVDD ≥ 1.62 V	-12 + (RDSETUP * $t_{HFCORECLK}$)	—	—	ns
		IOVDD ≥ 3.0 V	-11 + (RDSETUP * $t_{HFCORECLK}$)	—	—	ns
EBI_REn pulse width[1] [2]	t_{WIDTH_REn}	IOVDD ≥ 1.62 V	-6 + (MAX(1, RDSTRB) * $t_{HFCORECLK}$)	—	—	ns
		IOVDD ≥ 3.0 V	-4 + (MAX(1, RDSTRB) * $t_{HFCORECLK}$)	—	—	ns

Note:

1. The figure shows the timing for the case that the half strobe length functionality is not used, i.e. HALFRE=0. The leading edge of EBI_REn can be moved to the right by setting HALFRE=1. This decreases the length of t_{WIDTH_REn} and increases the length of t_{OSU_REn} by 1/2 * $t_{HFCLKNODIV}$.
2. When page mode is used, RDSTRB is replaced by RDPA for page hits.

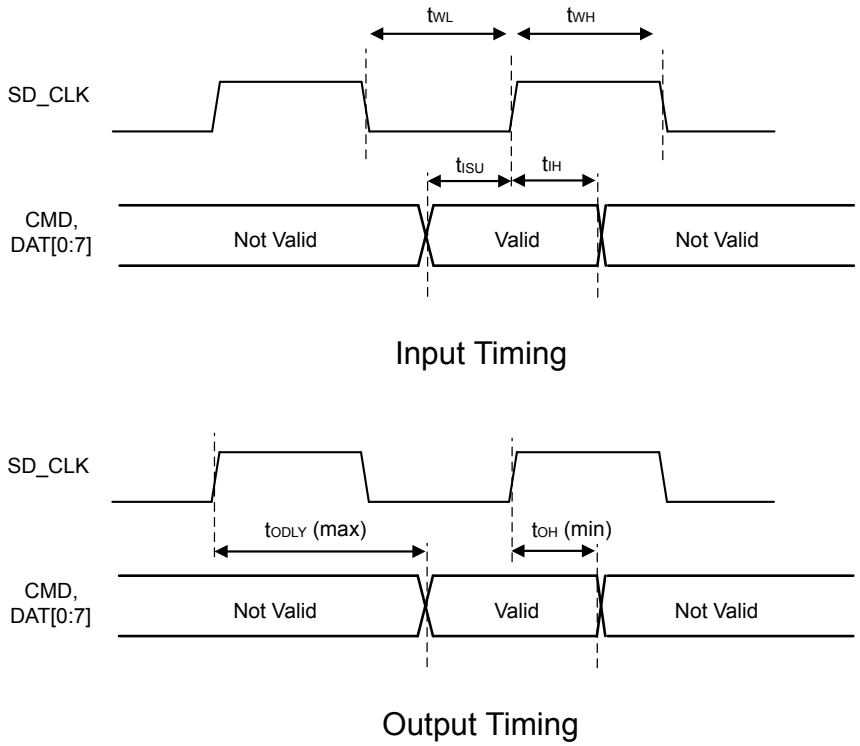

Figure 4.18. SDIO MMC SDR Mode Timing

QSPI DDR Mode Timing (Locations 1, 2)

Timing is specified with voltage scaling disabled, PHY-mode, route locations other than 0, TX DLL = 53, RX DLL = 88, 20-25 pF loading per GPIO, and slew rate for all GPIO set to 6, DRIVESTRENGTH = STRONG.

Table 4.57. QSPI DDR Mode Timing (Locations 1, 2)

Parameter	Symbol	Test Condition	Min	Typ	Max	Unit
Half SCLK period	T/2	HFXO	$(1/F_{SCLK})$ * 0.4 - 0.4	—	—	ns
		HFRCO, AUXHFRCO, USHFRCO	$(1/F_{SCLK})$ * 0.44	—	—	ns
Output valid	t_{OV}		—	—	T/2 - 6.6	ns
Output hold	t_{OH}		T/2 - 52.2	—	—	ns
Input setup	t_{SU}		44.8	—	—	ns
Input hold	t_H		-2.4	—	—	ns

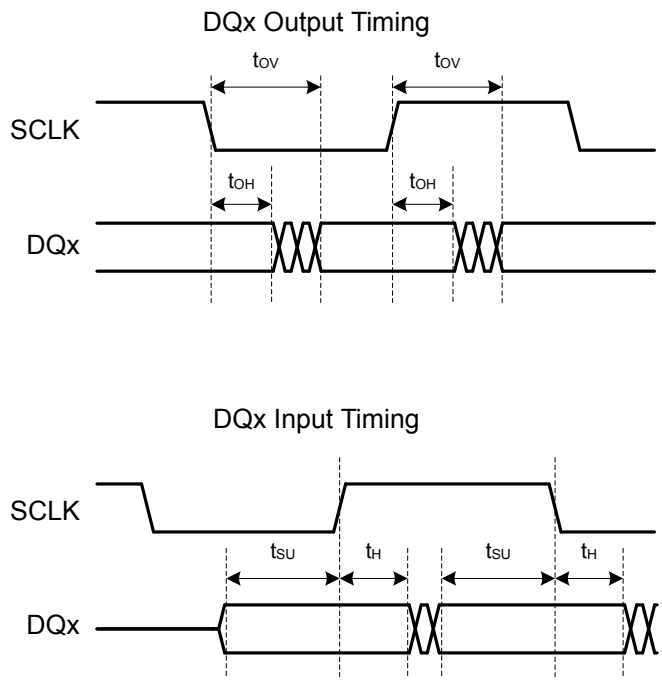

Figure 4.22. QSPI DDR Timing Diagrams

QSPI DDR Flash Timing Example

This example uses timing values for location 0 (DDR mode) to demonstrate the calculation of allowable flash timing using the QSPI in DDR mode.

- Using a configured SCLK frequency (F_{SCLK}) of 8 MHz from the HFXO clock source:
- The resulting minimum half-period, T/2(min) = $(1/F_{SCLK})$ * 0.4 - 0.4 = 49.6 ns.
- Flash will see a minimum setup time of T/2 – t_{OV} = T/2 – (T/2 – 5.0) = 5.0 ns.
- Flash will see a minimum hold time of t_{OH} = T/2 – 39.4 = 49.6 – 39.4 = 10.2 ns.
- Flash can have a maximum output valid time of T/2 – t_{SU} = T/2 – 33.1 = 49.6 – 33.1 = 16.5 ns.
- Flash can have a minimum output hold time of t_H = - 0.9 ns.

Pin Name	Pin(s)	Description	Pin Name	Pin(s)	Description
PA15	B1	GPIO	PE14	B2	GPIO
PE12	B3	GPIO	PE8	B4	GPIO
PD11	B5	GPIO	PD9	B6	GPIO
PF8	B7	GPIO	PF6	B8	GPIO
PF14	B9	GPIO (5V)	PF12	B10	GPIO
PF2	B11	GPIO	PF0	B12	GPIO (5V)
PC14	B13	GPIO (5V)	VREGO	B14	Decoupling for 5 V regulator and regulator output. Power for USB PHY in USB-enabled OPNs
PA1	C1	GPIO	PA0	C2	GPIO
PD13	C3	GPIO (5V)	PE10	C4	GPIO
PI8	C5	GPIO (5V)	PI7	C6	GPIO (5V)
PI6	C7	GPIO (5V)	PF5	C8	GPIO
PF15	C9	GPIO (5V)	PF4	C10	GPIO
PF3	C11	GPIO	PC13	C12	GPIO (5V)
PC12	C13	GPIO (5V)	VREGI	C14	Input to 5 V regulator.
PA3	D1	GPIO	PA2	D2	GPIO
PD14	D3	GPIO (5V)	PC11	D12	GPIO (5V)
PC10	D13	GPIO (5V)	PC9	D14	GPIO (5V)
PA5	E1	GPIO	PA4	E2	GPIO
PD15	E3	GPIO (5V)	IOVDD1	E6	Digital IO power supply 1.
VSS	E7 E8 G5 G7 G8 G10 H5 H7 H8 H10 K7 K8	Ground	IOVDD0	E9 F10 J5 J10 K6 K9	Digital IO power supply 0.
PC8	E12	GPIO (5V)	PI5	E13	GPIO (5V)
PI4	E14	GPIO (5V)	PG0	F1	GPIO (5V)
PA6	F2	GPIO	PG1	F3	GPIO (5V)
IOVDD2	F5	Digital IO power supply 2.	PI3	F12	GPIO (5V)
PI2	F13	GPIO (5V)	PI1	F14	GPIO (5V)
PG3	G1	GPIO (5V)	PG4	G2	GPIO (5V)
PG2	G3	GPIO (5V)	PE7	G12	GPIO
PI0	G13	GPIO (5V)	DECOUPLE	G14	Decouple output for on-chip voltage regulator. An external decoupling capacitor is required at this pin.

5.4 EFM32GG11B5xx in BGA120 Device Pinout

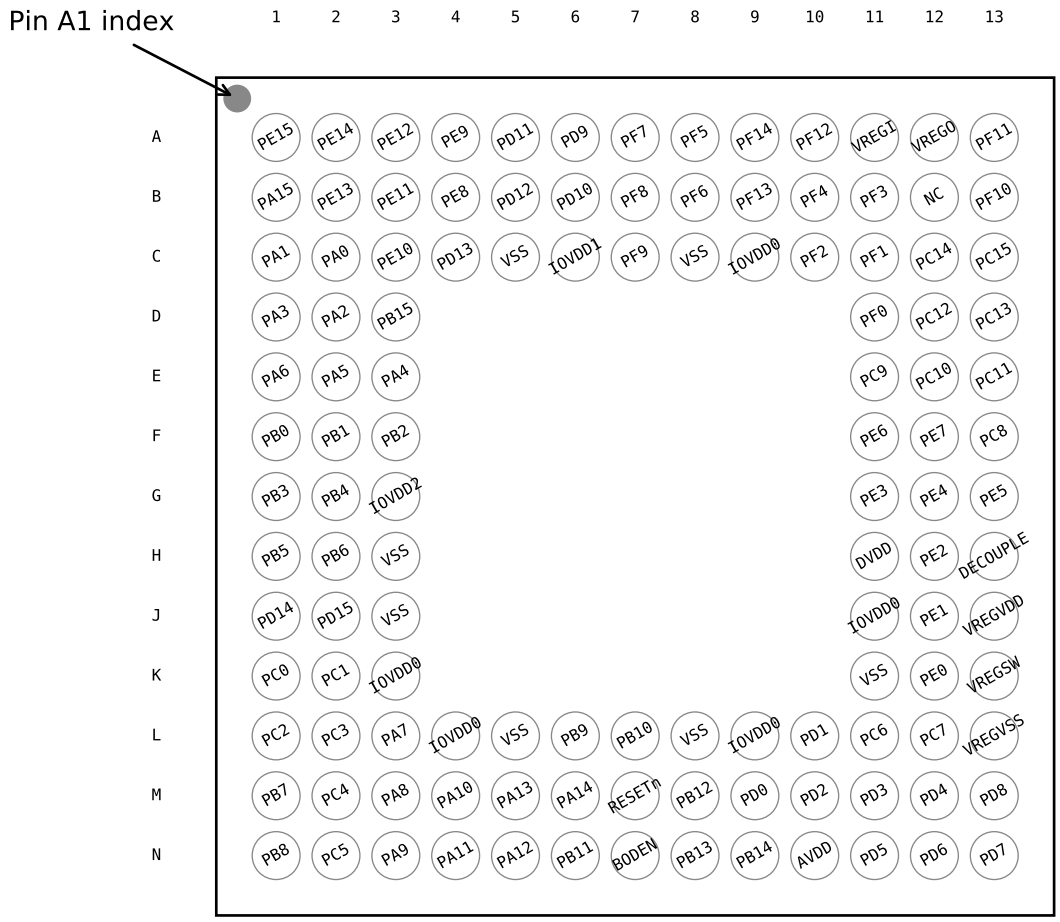

Figure 5.4. EFM32GG11B5xx in BGA120 Device Pinout

The following table provides package pin connections and general descriptions of pin functionality. For detailed information on the supported features for each GPIO pin, see 5.20 GPIO Functionality Table or 5.21 Alternate Functionality Overview.

Table 5.4. EFM32GG11B5xx in BGA120 Device Pinout

Pin Name	Pin(s)	Description	Pin Name	Pin(s)	Description
PE15	A1	GPIO	PE14	A2	GPIO
PE12	A3	GPIO	PE9	A4	GPIO
PD11	A5	GPIO	PD9	A6	GPIO
PF7	A7	GPIO	PF5	A8	GPIO
PF14	A9	GPIO (5V)	PF12	A10	GPIO
VREGI	A11	Input to 5 V regulator.	VREGO	A12	Decoupling for 5 V regulator and regulator output. Power for USB PHY in USB-enabled OPNs

Pin Name	Pin(s)	Description	Pin Name	Pin(s)	Description
PD8	H8	GPIO	PD5	H9	GPIO
PD6	H10	GPIO	PD7	H11	GPIO
PC1	J1	GPIO (5V)	PC3	J2	GPIO (5V)
PD15	J3	GPIO (5V)	PA12	J4	GPIO (5V)
PA9	J5	GPIO	PA10	J6	GPIO
PB9	J7	GPIO (5V)	PB10	J8	GPIO (5V)
PD2	J9	GPIO (5V)	PD3	J10	GPIO
PD4	J11	GPIO	PB7	K1	GPIO
PC4	K2	GPIO	PA13	K3	GPIO (5V)
PA11	K5	GPIO	RESETn	K6	Reset input, active low. To apply an external reset source to this pin, it is required to only drive this pin low during reset, and let the internal pull-up ensure that reset is released.
AVDD	K8 K9 L10	Analog power supply.	PD1	K11	GPIO
PB8	L1	GPIO	PC5	L2	GPIO
PA14	L3	GPIO	PB11	L5	GPIO
PB12	L6	GPIO	PB13	L8	GPIO
PB14	L9	GPIO	PD0	L11	GPIO (5V)

Note:

1. GPIO with 5V tolerance are indicated by (5V).
2. The pins PD13, PD14, and PD15 will not be 5V tolerant on all future devices. In order to preserve upgrade options with full hardware compatibility, do not use these pins with 5V domains.

Pin Name	Pin(s)	Description	Pin Name	Pin(s)	Description
PE8	B4	GPIO	PD11	B5	GPIO
PF8	B6	GPIO	PF6	B7	GPIO
PF3	B8	GPIO	PE5	B9	GPIO
PC12	B10	GPIO (5V)	PC13	B11	GPIO (5V)
PA1	C1	GPIO	PA0	C2	GPIO
PE10	C3	GPIO	PD13	C4	GPIO (5V)
PD12	C5	GPIO	PF9	C6	GPIO
VSS	C7 D4 F9 G3 G9 H6 K4 K7 K10 L7	Ground	PF2	C8	GPIO
PE6	C9	GPIO	PC10	C10	GPIO (5V)
PC11	C11	GPIO (5V)	PA3	D1	GPIO
PA2	D2	GPIO	PB15	D3	GPIO (5V)
IOVDD1	D5	Digital IO power supply 1.	PD9	D6	GPIO
IOVDD0	D7 G8 H7 L4	Digital IO power supply 0.	PF1	D8	GPIO (5V)
PE7	D9	GPIO	PC8	D10	GPIO (5V)
PC9	D11	GPIO (5V)	PA6	E1	GPIO
PA5	E2	GPIO	PA4	E3	GPIO
PB0	E4	GPIO	PF0	E8	GPIO (5V)
PE0	E9	GPIO (5V)	PE1	E10	GPIO (5V)
PE3	E11	GPIO	PB1	F1	GPIO
PB2	F2	GPIO	PB3	F3	GPIO
PB4	F4	GPIO	DVDD	F8	Digital power supply.
PE2	F10	GPIO	DECOUPLE	F11	Decouple output for on-chip voltage regulator. An external decoupling capacitor is required at this pin.
PB5	G1	GPIO	PB6	G2	GPIO
IOVDD2	G4	Digital IO power supply 2.	PC6	G10	GPIO
PC7	G11	GPIO	PC0	H1	GPIO (5V)
PC2	H2	GPIO (5V)	PD14	H3	GPIO (5V)
PA7	H4	GPIO	PA8	H5	GPIO
PD8	H8	GPIO	PD5	H9	GPIO
PD6	H10	GPIO	PD7	H11	GPIO

Pin Name	Pin(s)	Description	Pin Name	Pin(s)	Description
PB2	11	GPIO	PB3	12	GPIO
PB4	13	GPIO	PB5	14	GPIO
PB6	15	GPIO	VSS	16 32 58 83	Ground
PC0	18	GPIO (5V)	PC1	19	GPIO (5V)
PC2	20	GPIO (5V)	PC3	21	GPIO (5V)
PC4	22	GPIO	PC5	23	GPIO
PB7	24	GPIO	PB8	25	GPIO
PA7	26	GPIO	PA8	27	GPIO
PA9	28	GPIO	PA10	29	GPIO
PA11	30	GPIO	PA12	33	GPIO (5V)
PA13	34	GPIO (5V)	PA14	35	GPIO
RESETn	36	Reset input, active low. To apply an external reset source to this pin, it is required to only drive this pin low during reset, and let the internal pull-up ensure that reset is released.	PB9	37	GPIO (5V)
PB10	38	GPIO (5V)	PB11	39	GPIO
PB12	40	GPIO	AVDD	41 45	Analog power supply.
PB13	42	GPIO	PB14	43	GPIO
PD0	46	GPIO (5V)	PD1	47	GPIO
PD2	48	GPIO (5V)	PD3	49	GPIO
PD4	50	GPIO	PD5	51	GPIO
PD6	52	GPIO	PD7	53	GPIO
PD8	54	GPIO	PC6	55	GPIO
PC7	56	GPIO	DVDD	57	Digital power supply.
DECOUPLE	59	Decouple output for on-chip voltage regulator. An external decoupling capacitor is required at this pin.	PE0	60	GPIO (5V)
PE1	61	GPIO (5V)	PE2	62	GPIO
PE3	63	GPIO	PE4	64	GPIO
PE5	65	GPIO	PE6	66	GPIO
PE7	67	GPIO	PC8	68	GPIO (5V)
PC9	69	GPIO (5V)	PC10	70	GPIO (5V)
PC11	71	GPIO (5V)	VREGI	72	Input to 5 V regulator.
VREGO	73	Decoupling for 5 V regulator and regulator output. Power for USB PHY in USB-enabled OPNs	PF10	74	GPIO (5V)
PF11	75	GPIO (5V)	PF0	76	GPIO (5V)

5.13 EFM32GG11B5xx in QFP64 Device Pinout

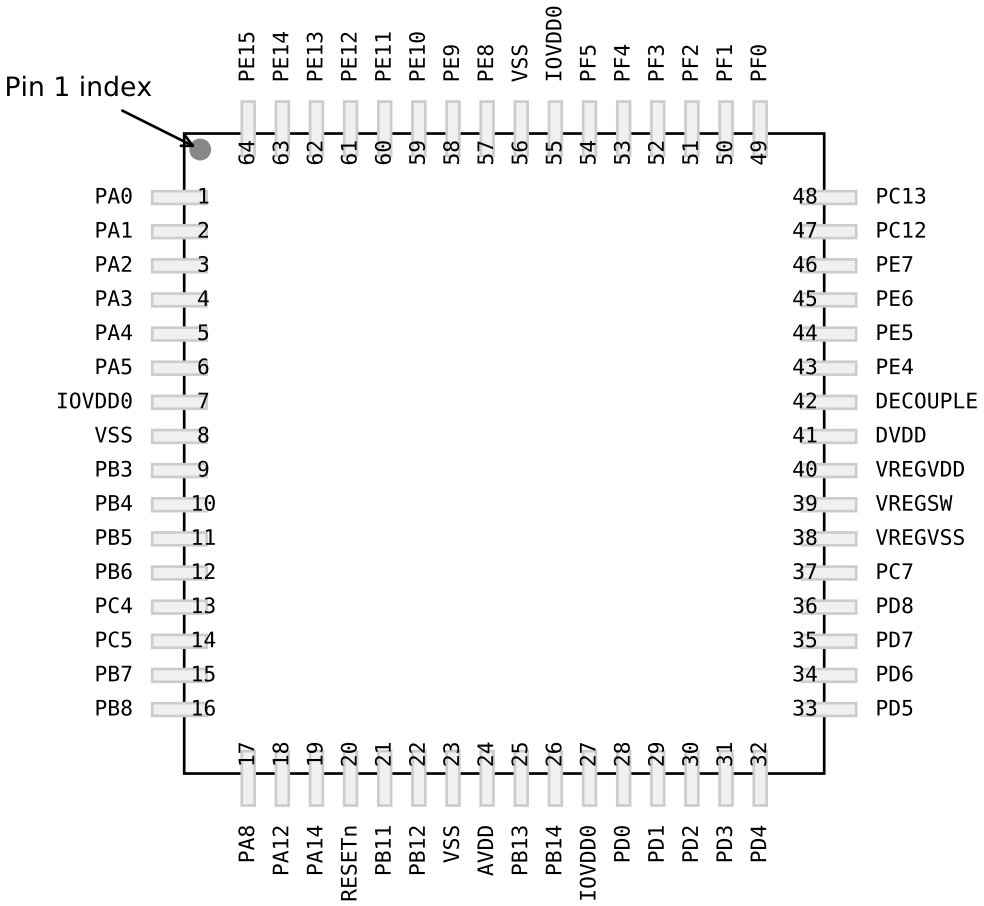

Figure 5.13. EFM32GG11B5xx in QFP64 Device Pinout

The following table provides package pin connections and general descriptions of pin functionality. For detailed information on the supported features for each GPIO pin, see 5.20 GPIO Functionality Table or 5.21 Alternate Functionality Overview.

Table 5.13. EFM32GG11B5xx in QFP64 Device Pinout

Pin Name	Pin(s)	Description	Pin Name	Pin(s)	Description
PA0	1	GPIO	PA1	2	GPIO
PA2	3	GPIO	PA3	4	GPIO
PA4	5	GPIO	PA5	6	GPIO
IOVDD0	7 27 55	Digital IO power supply 0.	VSS	8 23 56	Ground
PB3	9	GPIO	PB4	10	GPIO
PB5	11	GPIO	PB6	12	GPIO

Alternate	LOCATION		
Functionality	0 - 3	4 - 7	Description
ETH_MDIO	0: PB3 1: PD13 2: PC0 3: PA15		Ethernet Management Data I/O.
ETH_MIICOL	0: PB2 1: PG15 2: PB4		Ethernet MII Collision Detect.
ETH_MIICRS	0: PB1 1: PG14 2: PB3		Ethernet MII Carrier Sense.
ETH_MIIRXCLK	0: PA15 1: PG7 2: PD12		Ethernet MII Receive Clock.
ETH_MIIRXD0	0: PE12 1: PG11 2: PF9		Ethernet MII Receive Data Bit 0.
ETH_MIIRXD1	0: PE13 1: PG10 2: PD9		Ethernet MII Receive Data Bit 1.
ETH_MIIRXD2	0: PE14 1: PG9 2: PD10		Ethernet MII Receive Data Bit 2.
ETH_MIIRXD3	0: PE15 1: PG8 2: PD11		Ethernet MII Receive Data Bit 3.
ETH_MIIRXDV	0: PE11 1: PG12 2: PF8		Ethernet MII Receive Data Valid.
ETH_MIIRXER	0: PE10 1: PG13 2: PF7		Ethernet MII Receive Error.
ETH_MIITXCLK	0: PA0 1: PG0		Ethernet MII Transmit Clock.
ETH_MIITXD0	0: PA4 1: PG4		Ethernet MII Transmit Data Bit 0.
ETH_MIITXD1	0: PA3 1: PG3		Ethernet MII Transmit Data Bit 1.

Alternate	LOCATION		
Functionality	0 - 3	4 - 7	Description
WTIM3_CC2	0: PD11 1: PC10 2: PC13 3: PF11	4: PI5 5: PF6 6: PF12 7: PF15	Wide timer 3 Capture Compare input / output channel 2.

Certain alternate function locations may have non-interference priority. These locations will take precedence over any other functions selected on that pin (i.e. another alternate function enabled to the same pin inadvertently).

Some alternate functions may also have high speed priority on certain locations. These locations ensure the fastest possible paths to the pins for timing-critical signals.

The following table lists the alternate functions and locations with special priority.

Table 5.22. Alternate Functionality Priority

Alternate Functionality	Location	Priority
CMU_CLK2	1: PA3 5: PD10	High Speed High Speed
CMU_CLKI0	1: PA3 5: PD10	High Speed High Speed
ETH_RMIICRSDV	0: PA4 1: PD11	High Speed High Speed
ETH_RMIIREFCLK	0: PA3 1: PD10	High Speed High Speed
ETH_RMIIRXD0	0: PA2 1: PD9	High Speed High Speed
ETH_RMIIRXD1	0: PA1 1: PF9	High Speed High Speed
ETH_RMIIRXER	0: PA5 1: PD12	High Speed High Speed
ETH_RMIITXD0	0: PE15 1: PF7	High Speed High Speed
ETH_RMIITXD1	0: PE14 1: PF6	High Speed High Speed
ETH_RMIITXEN	0: PA0 1: PF8	High Speed High Speed
QSPI0_CS0	0: PF7	High Speed
QSPI0_CS1	0: PF8	High Speed
QSPI0_DQ0	0: PD9	High Speed
QSPI0_DQ1	0: PD10	High Speed
QSPI0_DQ2	0: PD11	High Speed
QSPI0_DQ3	0: PD12	High Speed
QSPI0_DQ4	0: PE8	High Speed
QSPI0_DQ5	0: PE9	High Speed
QSPI0_DQ6	0: PE10	High Speed
QSPI0_DQ7	0: PE11	High Speed

Table 5.31. VDAC0 / OPA Bus and Pin Mapping

Port	Bus	OPA0_N	OPA0_P														
CH31		APORT1Y BUSAY		APORT2Y BUSBY		APORT3Y BUSCY		APORT4Y BUSDY		APORT1X BUSAX		APORT2X BUSBX		APORT3X BUSCX		APORT4X BUSDX	
CH30					PB15		PF15				PB15		PF15				
CH29				PB14		PF14				PB14		PF14					
CH28		PB13					PF13				PB13		PF13				
CH27				PB12		PF12				PB12		PF12					
CH26		PB11					PF11				PB11		PF11				
CH25				PB10		PF10				PB10		PF10					
CH24		PB9					PF9				PB9		PF9				
CH23						PF8						PF8					
CH22							PF7						PF7				
CH21				PB6		PF6				PB6		PF6					
CH20		PB5					PF5				PB5		PF5				
CH19				PB4		PF4				PB4		PF4					
CH18		PB3					PF3				PB3		PF3				
CH17				PB2		PF2				PB2		PF2					
CH16		PB1					PF1				PB1		PF1				
CH15				PB0		PF0				PB0		PF0					
CH14		PA15					PE15				PA15		PE15				
CH13				PA14		PE14				PA14		PE14					
CH12		PA13					PE13				PA13		PE13				
CH11				PA12		PE12				PA12		PE12					
CH10		PA11					PE11				PA11		PE11				
CH9				PA10		PE10				PA10		PE10					
CH8		PA9					PE9				PA9		PE9				
CH7				PA8		PE8				PA8		PE8					
CH6		PA7					PE7				PA7		PE7				
CH5				PA6		PE6				PA6		PE6					
CH4		PA5					PE5				PA5		PE5				
CH3				PA4		PE4				PA4		PE4					
CH2		PA3									PA3						
CH1				PA2						PA2							
CH0		PA1					PE1				PA1		PE1				
				PA0		PE0				PA0		PE0					

Table 7.2. BGA152 PCB Land Pattern Dimensions

Dimension	Min	Nom	Max
X		0.20	
C1		6.50	
C2		6.50	
E1		0.5	
E2		0.5	

Note:

1. All dimensions shown are in millimeters (mm) unless otherwise noted.
2. Dimensioning and Tolerancing is per the ANSI Y14.5M-1994 specification.
3. This Land Pattern Design is based on the IPC-7351 guidelines.
4. All metal pads are to be non-solder mask defined (NSMD). Clearance between the solder mask and the metal pad is to be 60 µm minimum, all the way around the pad.
5. A stainless steel, laser-cut and electro-polished stencil with trapezoidal walls should be used to assure good solder paste release.
6. The stencil thickness should be 0.125 mm (5 mils).
7. The ratio of stencil aperture to land pad size should be 1:1.
8. A No-Clean, Type-3 solder paste is recommended.
9. The recommended card reflow profile is per the JEDEC/IPC J-STD-020C specification for Small Body Components.

Table 11.1. TQFP64 Package Dimensions

Dimension	Min	Typ	Max
A	—	1.15	1.20
A1	0.05	—	0.15
A2	0.95	1.00	1.05
b	0.17	0.22	0.27
b1	0.17	0.20	0.23
c	0.09	—	0.20
c1	0.09	—	0.16
D	12.00 BSC		
D1	10.00 BSC		
e	0.50 BSC		
E	12.00 BSC		
E1	10.00 BSC		
L	0.45	0.60	0.75
L1	1.00 REF		
R1	0.08	—	—
R2	0.08	—	0.20
S	0.20	—	—
θ	0	3.5	7
Θ1	0	—	0.10
Θ2	11	12	13
Θ3	11	12	13

Note:

1. All dimensions shown are in millimeters (mm) unless otherwise noted.
2. Dimensioning and Tolerancing per ANSI Y14.5M-1994.
3. Recommended card reflow profile is per the JEDEC/IPC J-STD-020 specification for Small Body Components.

Table 12.2. QFN64 PCB Land Pattern Dimensions

Dimension	Typ
C1	8.90
C2	8.90
E	0.50
X1	0.30
Y1	0.85
X2	7.30
Y2	7.30

Note:

1. All dimensions shown are in millimeters (mm) unless otherwise noted.
2. This Land Pattern Design is based on the IPC-7351 guidelines.
3. All dimensions shown are at Maximum Material Condition (MMC). Least Material Condition (LMC) is calculated based on a Fabrication Allowance of 0.05mm.
4. All metal pads are to be non-solder mask defined (NSMD). Clearance between the solder mask and the metal pad is to be 60 µm minimum, all the way around the pad.
5. A stainless steel, laser-cut and electro-polished stencil with trapezoidal walls should be used to assure good solder paste release.
6. The stencil thickness should be 0.125 mm (5 mils).
7. The ratio of stencil aperture to land pad size can be 1:1 for all pads.
8. A 3x3 array of 1.45 mm square openings on a 2.00 mm pitch can be used for the center ground pad.
9. A No-Clean, Type-3 solder paste is recommended.
10. The recommended card reflow profile is per the JEDEC/IPC J-STD-020 specification for Small Body Components.