Lattice Semiconductor Corporation - LFE3-95E-6FN484I Datasheet

Welcome to E-XFL.COM

Understanding Embedded - FPGAs (Field Programmable Gate Array)

Embedded - FPGAs, or Field Programmable Gate Arrays, are advanced integrated circuits that offer unparalleled flexibility and performance for digital systems. Unlike traditional fixed-function logic devices, FPGAs can be programmed and reprogrammed to execute a wide array of logical operations, enabling customized functionality tailored to specific applications. This reprogrammability allows developers to iterate designs quickly and implement complex functions without the need for custom hardware.

Applications of Embedded - FPGAs

The versatility of Embedded - FPGAs makes them indispensable in numerous fields. In telecommunications.

Details	
Product Status	Obsolete
Number of LABs/CLBs	11500
Number of Logic Elements/Cells	92000
Total RAM Bits	4526080
Number of I/O	295
Number of Gates	-
Voltage - Supply	1.14V ~ 1.26V
Mounting Type	Surface Mount
Operating Temperature	-40°C ~ 100°C (TJ)
Package / Case	484-BBGA
Supplier Device Package	484-FPBGA (23x23)
Purchase URL	https://www.e-xfl.com/product-detail/lattice-semiconductor/lfe3-95e-6fn484i

Figure 2-4. General Purpose PLL Diagram

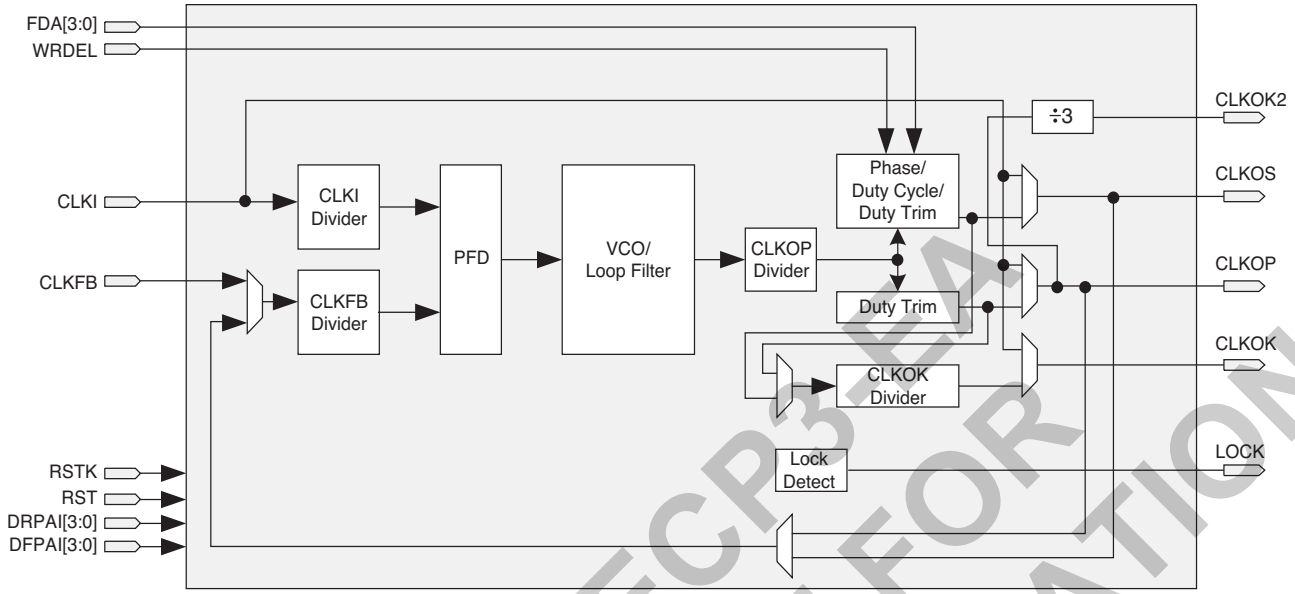

Table 2-4 provides a description of the signals in the PLL blocks.

Table 2-4. PLL Blocks Signal Descriptions

Signal	I/O	Description
CLKI	I	Clock input from external pin or routing
CLKFB	I	PLL feedback input from CLKOP, CLKOS, or from a user clock (pin or logic)
RST	I	“1” to reset PLL counters, VCO, charge pumps and M-dividers
RSTK	I	“1” to reset K-divider
WRDEL	I	DPA Fine Delay Adjust input
CLKOS	O	PLL output to clock tree (phase shifted/duty cycle changed)
CLKOP	O	PLL output to clock tree (no phase shift)
CLKOK	O	PLL output to clock tree through secondary clock divider
CLKOK2	O	PLL output to clock tree (CLKOP divided by 3)
LOCK	O	“1” indicates PLL LOCK to CLKI
FDA [3:0]	I	Dynamic fine delay adjustment on CLKOS output
DRPAI[3:0]	I	Dynamic coarse phase shift, rising edge setting
DFPAI[3:0]	I	Dynamic coarse phase shift, falling edge setting

Delay Locked Loops (DLL)

In addition to PLLs, the LatticeECP3 family of devices has two DLLs per device.

CLKI is the input frequency (generated either from the pin or routing) for the DLL. CLKI feeds into the output muxes block to bypass the DLL, directly to the DELAY CHAIN block and (directly or through divider circuit) to the reference input of the Phase Detector (PD) input mux. The reference signal for the PD can also be generated from the Delay Chain signals. The feedback input to the PD is generated from the CLKFB pin or from a tapped signal from the Delay chain.

The PD produces a binary number proportional to the phase and frequency difference between the reference and feedback signals. Based on these inputs, the ALU determines the correct digital control codes to send to the delay

SEE LatticeECP3 EA DATA SHEET FOR CURRENT INFORMATION

PLL/DLL Cascading

LatticeECP3 devices have been designed to allow certain combinations of PLL and DLL cascading. The allowable combinations are:

- PLL to PLL supported
- PLL to DLL supported

The DLLs in the LatticeECP3 are used to shift the clock in relation to the data for source synchronous inputs. PLLs are used for frequency synthesis and clock generation for source synchronous interfaces. Cascading PLL and DLL blocks allows applications to utilize the unique benefits of both DLLs and PLLs.

For further information about the DLL, please see the list of technical documentation at the end of this data sheet.

PLL/DLL PIO Input Pin Connections

All LatticeECP3 devices contains two DLLs and up to ten PLLs, arranged in quadrants. If a PLL and a DLL are next to each other, they share input pins as shown in the Figure 2-7.

Figure 2-7. Sharing of PIO Pins by PLLs and DLLs in LatticeECP3 Devices

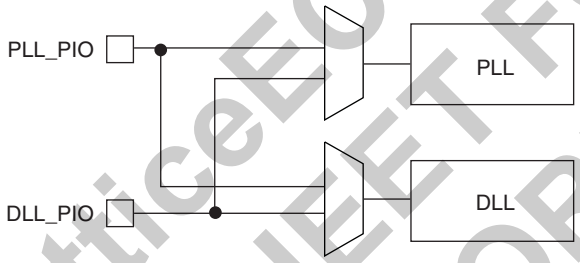

Note: Not every PLL has an associated DLL.

Clock Dividers

LatticeECP3 devices have two clock dividers, one on the left side and one on the right side of the device. These are intended to generate a slower-speed system clock from a high-speed edge clock. The block operates in a ÷2, ÷4 or ÷8 mode and maintains a known phase relationship between the divided down clock and the high-speed clock based on the release of its reset signal. The clock dividers can be fed from selected PLL/DLL outputs, the Slave Delay lines, routing or from an external clock input. The clock divider outputs serve as primary clock sources and feed into the clock distribution network. The Reset (RST) control signal resets input and asynchronously forces all outputs to low. The RELEASE signal releases outputs synchronously to the input clock. For further information on clock dividers, please see TN1178, LatticeECP3 sysCLOCK PLL/DLL Design and Usage Guide. Figure 2-8 shows the clock divider connections.

SEE LatticeECP3-EA DATA SHEET FOR CURRENT INFORMATION

Figure 2-8. Clock Divider Connections

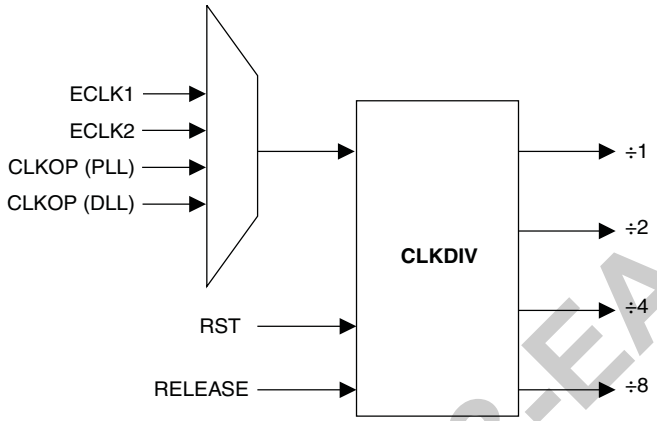

Clock Distribution Network

LatticeECP3 devices have eight quadrant-based primary clocks and eight secondary clock/control sources. Two high performance edge clocks are available on the top, left, and right edges of the device to support high speed interfaces. These clock sources are selected from external I/Os, the sysCLOCK PLLs, DLLs or routing. These clock sources are fed throughout the chip via a clock distribution system.

Primary Clock Sources

LatticeECP3 devices derive clocks from six primary source types: PLL outputs, DLL outputs, CLKDIV outputs, dedicated clock inputs, routing and SERDES Quads. LatticeECP3 devices have two to ten sysCLOCK PLLs and two DLLs, located on the left and right sides of the device. There are six dedicated clock inputs: two on the top side, two on the left side and two on the right side of the device. Figures 2-9, 2-10 and 2-11 show the primary clock sources for LatticeECP3 devices.

Figure 2-9. Primary Clock Sources for LatticeECP3-17

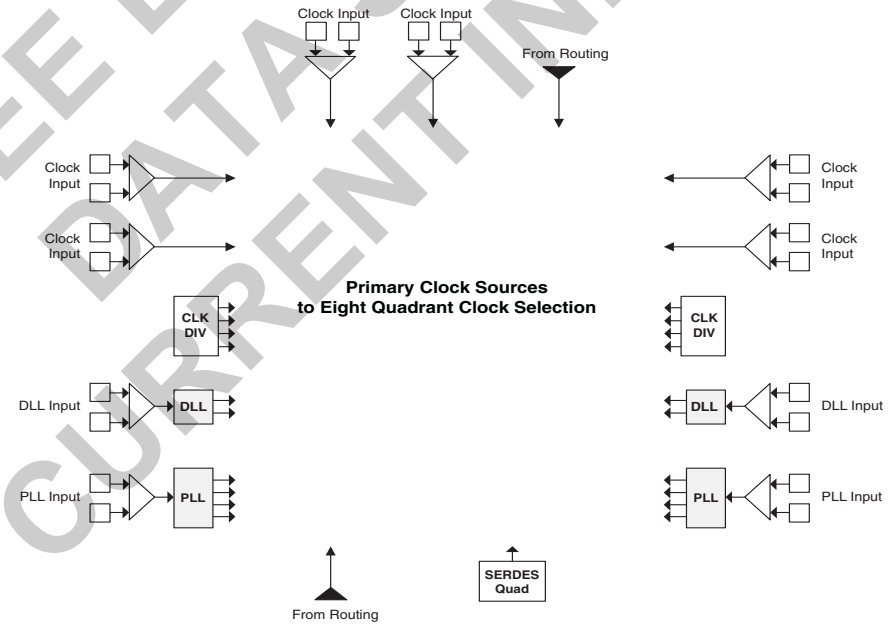

Note: Clock inputs can be configured in differential or single-ended mode.

SEE LatticeECP3-EA DATASHEET FOR CURRENT INFORMATION

Figure 2-20. Sources of Edge Clock (Left and Right Edges)

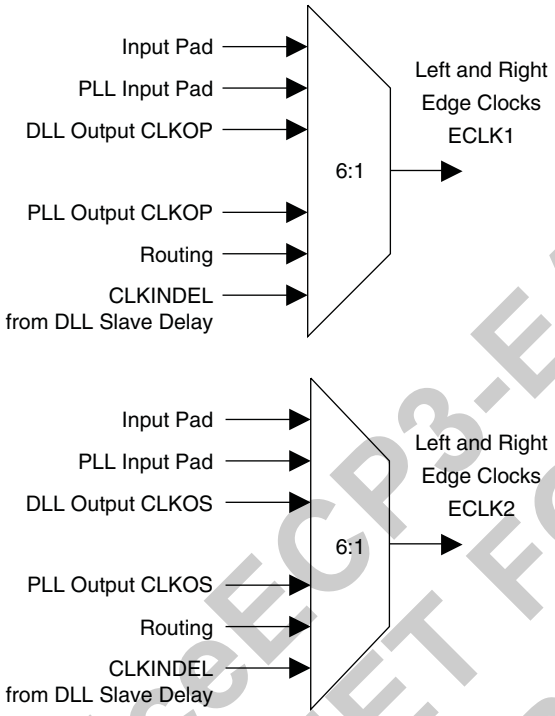

Figure 2-21. Sources of Edge Clock (Top Edge)

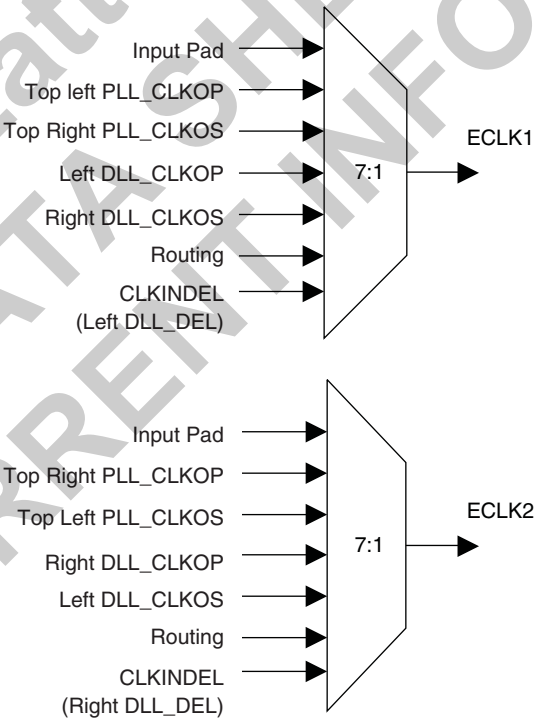

SEE LatticeECP3-EA DATA SHEET FOR CURRENT INFORMATION

The edge clocks have low injection delay and low skew. They are used to clock the I/O registers and thus are ideal for creating I/O interfaces with a single clock signal and a wide data bus. They are also used for DDR Memory or Generic DDR interfaces.

Single, Dual and Pseudo-Dual Port Modes

In all the sysMEM RAM modes the input data and address for the ports are registered at the input of the memory array. The output data of the memory is optionally registered at the output.

EBR memory supports the following forms of write behavior for single port or dual port operation:

1. **Normal** – Data on the output appears only during a read cycle. During a write cycle, the data (at the current address) does not appear on the output. This mode is supported for all data widths.
2. **Write Through** – A copy of the input data appears at the output of the same port during a write cycle. This mode is supported for all data widths.
3. **Read-Before-Write (EA devices only)** – When new data is written, the old content of the address appears at the output. This mode is supported for x9, x18, and x36 data widths.

Memory Core Reset

The memory array in the EBR utilizes latches at the A and B output ports. These latches can be reset asynchronously or synchronously. RSTA and RSTB are local signals, which reset the output latches associated with Port A and Port B, respectively. The Global Reset (GSRN) signal can reset both ports. The output data latches and associated resets for both ports are as shown in Figure 2-22.

Figure 2-22. Memory Core Reset

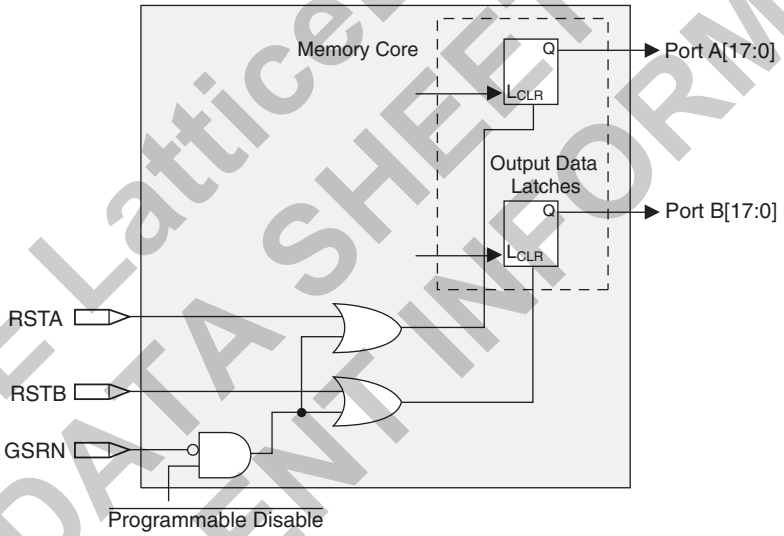

For further information on the sysMEM EBR block, please see the list of technical documentation at the end of this data sheet.

sysDSP™ Slice

The LatticeECP3 family provides an enhanced sysDSP architecture, making it ideally suited for low-cost, high-performance Digital Signal Processing (DSP) applications. Typical functions used in these applications are Finite Impulse Response (FIR) filters, Fast Fourier Transforms (FFT) functions, Correlators, Reed-Solomon/Turbo/Convolution encoders and decoders. These complex signal processing functions use similar building blocks such as multiply-adders and multiply-accumulators.

sysDSP Slice Approach Compared to General DSP

Conventional general-purpose DSP chips typically contain one to four (Multiply and Accumulate) MAC units with fixed data-width multipliers; this leads to limited parallelism and limited throughput. Their throughput is increased by higher clock speeds. The LatticeECP3, on the other hand, has many DSP slices that support different data widths.

SEE LatticeECP3-EA DATA SHEET FOR CURRENT INFORMATION

This allows designers to use highly parallel implementations of DSP functions. Designers can optimize DSP performance vs. area by choosing appropriate levels of parallelism. Figure 2-23 compares the fully serial implementation to the mixed parallel and serial implementation.

Figure 2-23. Comparison of General DSP and LatticeECP3 Approaches

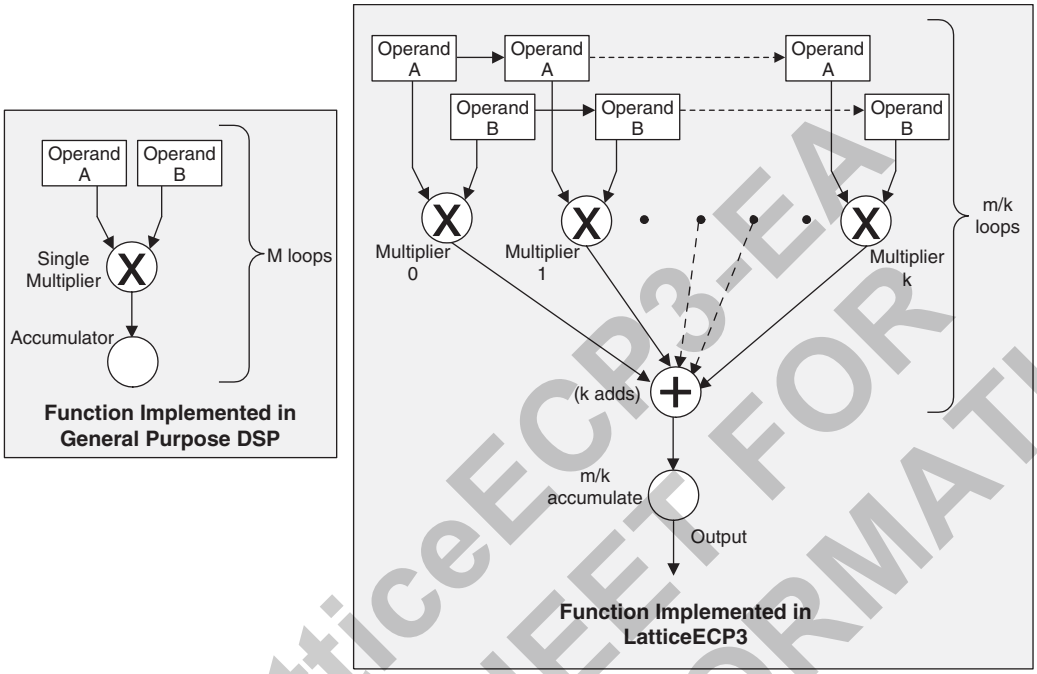

SEE LatticeECP3-EA DATA SHEET FOR CURRENT INFORMATION

LatticeECP3 sysDSP Slice Architecture Features

The LatticeECP3 sysDSP Slice has been significantly enhanced to provide functions needed for advanced processing applications. These enhancements provide improved flexibility and resource utilization.

The LatticeECP3 sysDSP Slice supports many functions that include the following:

- Multiply (one 18x36, two 18x18 or four 9x9 Multiplies per Slice)
- Multiply (36x36 by cascading across two sysDSP slices)
- Multiply Accumulate (up to 18x36 Multipliers feeding an Accumulator that can have up to 54-bit resolution)
- Two Multiplies feeding one Accumulate per cycle for increased processing with lower latency (two 18x18 Multiplies feed into an accumulator that can accumulate up to 52 bits)
- Flexible saturation and rounding options to satisfy a diverse set of applications situations
- Flexible cascading across DSP slices
  - Minimizes fabric use for common DSP and ALU functions
  - Enables implementation of FIR Filter or similar structures using dedicated sysDSP slice resources only
  - Provides matching pipeline registers
  - Can be configured to continue cascading from one row of sysDSP slices to another for longer cascade chains
- Flexible and Powerful Arithmetic Logic Unit (ALU) Supports:
  - Dynamically selectable ALU OPCODE
  - Ternary arithmetic (addition/subtraction of three inputs)
  - Bit-wise two-input logic operations (AND, OR, NAND, NOR, XOR and XNOR)
  - Eight flexible and programmable ALU flags that can be used for multiple pattern detection scenarios, such

On-Chip Programmable Termination

The LatticeECP3 supports a variety of programmable on-chip terminations options, including:

- Dynamically switchable Single Ended Termination for SSTL15 inputs with programmable resistor values of 40, 50, or 60 ohms. This is particularly useful for low power JEDEC compliant DDR3 memory controller implementations. External termination to Vtt should be used for DDR2 memory controller implementation.
- Common mode termination of 80, 100, 120 ohms for differential inputs

Figure 2-39. On-Chip Termination

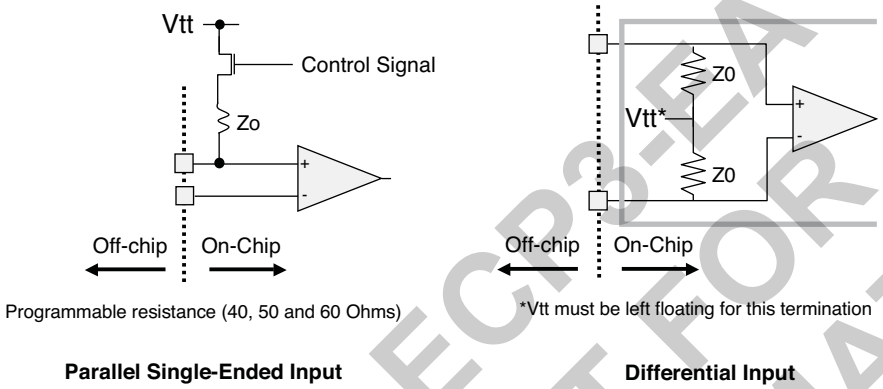

See Table 2-12 for termination options for input modes.

Table 2-12. On-Chip Termination Options for Input Modes

IO_TYPE	TERMINATE to VTT[1, 2]	DIFFRENTIAL TERMINATION RESISTOR[1]
LVDS25	þ	80, 100, 120
BLVDS25	þ	80, 100, 120
MLVDS	þ	80, 100, 120
HSTL18_I	40, 50, 60	þ
HSTL18_II	40, 50, 60	þ
HSTL18D_I	40, 50, 60	þ
HSTL18D_II	40, 50, 60	þ
HSTL15_I	40, 50, 60	þ
HSTL15D_I	40, 50, 60	þ
SSTL25_I	40, 50, 60	þ
SSTL25_II	40, 50, 60	þ
SSTL25D_I	40, 50, 60	þ
SSTL25D_II	40, 50, 60	þ
SSTL18_I	40, 50, 60	þ
SSTL18_II	40, 50, 60	þ
SSTL18D_I	40, 50, 60	þ
SSTL18D_II	40, 50, 60	þ
SSTL15	40, 50, 60	þ
SSTL15D	40, 50, 60	þ

1. TERMINATE to VTT and DIFFRENTIAL TERMINATION RESISTOR when turn on can only have one setting per bank. Only left and right banks have this feature.
   Use of TERMINATE to VTT and DIFFRENTIAL TERMINATION RESISTOR are mutually exclusive in an I/O bank.
   On-chip termination tolerance +/- 20%
2. External termination to VTT should be used when implementing DDR2 memory controller.

SEE LatticeECP3-EA DATASHEET FOR CURRENT INFORMATION

can also be programmed to utilize a Soft Error Detect (SED) mode that checks for soft errors in configuration SRAM. The SED operation can be run in the background during user mode. If a soft error occurs, during user mode (normal operation) the device can be programmed to generate an error signal.

For further information on SED support, please see TN1184, LatticeECP3 Soft Error Detection (SED) Usage Guide.

External Resistor

LatticeECP3 devices require a single external, 10K ohm ±1% value between the XRES pin and ground. Device configuration will not be completed if this resistor is missing. There is no boundary scan register on the external resistor pad.

On-Chip Oscillator

Every LatticeECP3 device has an internal CMOS oscillator which is used to derive a Master Clock (MCLK) for configuration. The oscillator and the MCLK run continuously and are available to user logic after configuration is completed. The software default value of the MCLK is nominally 2.5MHz. Table 2-16 lists all the available MCLK frequencies. When a different Master Clock is selected during the design process, the following sequence takes place:

1. Device powers up with a nominal Master Clock frequency of 3.1MHz.
2. During configuration, users select a different master clock frequency.
3. The Master Clock frequency changes to the selected frequency once the clock configuration bits are received.
4. If the user does not select a master clock frequency, then the configuration bitstream defaults to the MCLK frequency of 2.5MHz.

This internal CMOS oscillator is available to the user by routing it as an input clock to the clock tree. For further information on the use of this oscillator for configuration or user mode, please see TN1169, LatticeECP3 sysCONFIG Usage Guide.

Table 2-16. Selectable Master Clock (MCLK) Frequencies During Configuration (Nominal)

MCLK (MHz)	MCLK (MHz)	MCLK (MHz)
2.5[1]	10	41
3.1	13	45
4.3	15	51
5.4	20	55
6.9	26	60
8.1	30	130
9.2	34	—

1. Software default MCLK frequency. Hardware default is 3.1MHz.

Density Shifting

The LatticeECP3 family is designed to ensure that different density devices in the same family and in the same package have the same pinout. Furthermore, the architecture ensures a high success rate when performing design migration from lower density devices to higher density devices. In many cases, it is also possible to shift a lower utilization design targeted for a high-density device to a lower density device. However, the exact details of the final resource utilization will impact the likelihood of success in each case. An example is that some user I/Os may become No Connects in smaller devices in the same packge.

SEE LatticeECP3-EA DATA SHEET FOR CURRENT INFORMATION

DC Electrical Characteristics

Over Recommended Operating Conditions

Symbol	Parameter	Condition	Min.	Typ.	Max.	Units
I_{IL}, I_{IH}[1, 4]	Input or I/O Low Leakage	$0 \le V_{IN} \le (V_{CCIO} - 0.2V)$	—	—	10	µA
I_{IH}[1, 3]	Input or I/O High Leakage	$(V_{CCIO} - 0.2V) < V_{IN} \le 3.6V$	—	—	150	µA
I_{PU}	I/O Active Pull-up Current	$0 \le V_{IN} \le 0.7\ V_{CCIO}$	-30	—	-210	µA
I_{PD}	I/O Active Pull-down Current	V_{IL} (MAX) $\le V_{IN} \le V_{CCIO}$	30	—	210	µA
I_{BHLS}	Bus Hold Low Sustaining Current	$V_{IN} = V_{IL}$ (MAX)	30	—	—	µA
I_{BHHS}	Bus Hold High Sustaining Current	$V_{IN} = 0.7\ V_{CCIO}$	-30	—	—	µA
I_{BHLO}	Bus Hold Low Overdrive Current	$0 \le V_{IN} \le V_{CCIO}$	—	—	210	µA
I_{BHHO}	Bus Hold High Overdrive Current	$0 \le V_{IN} \le V_{CCIO}$	—	—	-210	µA
V_{BHT}	Bus Hold Trip Points	$0 \le V_{IN} \le V_{IH}$ (MAX)	V_{IL} (MAX)	—	V_{IH} (MIN)	V
C1	I/O Capacitance[2]	V_{CCIO} = 3.3V, 2.5V, 1.8V, 1.5V, 1.2V, V_{CC} = 1.2V, V_{IO} = 0 to V_{IH} (MAX)	—	8	—	pf
C2	Dedicated Input Capacitance[2]	V_{CCIO} = 3.3V, 2.5V, 1.8V, 1.5V, 1.2V, V_{CC} = 1.2V, V_{IO} = 0 to V_{IH} (MAX)	—	6	—	pf

1. Input or I/O leakage current is measured with the pin configured as an input or as an I/O with the output driver tri-stated. It is not measured with the output driver active. Bus maintenance circuits are disabled.
2. T_A 25°C, f = 1.0MHz.
3. Applicable to general purpose I/Os in top and bottom banks.
4. When used as V_{REF}, maximum leakage= 25µA.

SEE LatticeECP3-EA DATA SHEET FOR CURRENT INFORMATION

sysI/O Recommended Operating Conditions

Standard	V_{CCIO}			V_{REF} (V)		
	Min.	Typ.	Max.	Min.	Typ.	Max.
LVCMOS33[2]	3.135	3.3	3.465	—	—	—
LVCMOS25[2]	2.375	2.5	2.625	—	—	—
LVCMOS18	1.71	1.8	1.89	—	—	—
LVCMOS15	1.425	1.5	1.575	—	—	—
LVCMOS12[2]	1.14	1.2	1.26	—	—	—
LVTTL33[2]	3.135	3.3	3.465	—	—	—
PCI33	3.135	3.3	3.465	—	—	—
SSTL15[3]	1.43	1.5	1.57	0.68	0.75	0.9
SSTL18_I, II[2]	1.71	1.8	1.89	0.833	0.9	0.969
SSTL25_I, II[2]	2.375	2.5	2.625	1.15	1.25	1.35
SSTL33_I, II[2]	3.135	3.3	3.465	1.3	1.5	1.7
HSTL15_I[2]	1.425	1.5	1.575	0.68	0.75	0.9
HSTL18_I, II[2]	1.71	1.8	1.89	0.816	0.9	1.08
LVDS25[2]	2.375	2.5	2.625	—	—	—
MLVDS25[1]	2.375	2.5	2.625	—	—	—
LVPECL33[1, 2]	3.135	3.3	3.465	—	—	—
Mini LVDS	—	—	—	—	—	—
BLVDS25[1, 2]	2.375	2.5	2.625	—	—	—
RSDS25[1, 2]	2.375	2.5	2.625	—	—	—
RSDS25E[1, 2]	2.375	2.5	2.625	—	—	—
TRLVDS	3.14	3.3	3.47	—	—	—
PPLVDS	3.14/2.25	3.3/2.5	3.47/2.75	—	—	—
SSTL15D	1.43	1.5	1.57	—	—	—
SSTL18D_I[2], II[2]	1.71	1.8	1.89	—	—	—
SSTL25D_ I[2], II[2]	2.375	2.5	2.625	—	—	—
SSTL33D_ I[2], II[2]	3.135	3.3	3.465	—	—	—
HSTL15D_ I[2]	1.425	1.5	1.575	—	—	—
HSTL18D_ I[2], II[2]	1.71	1.8	1.89	—	—	—

1. Inputs on chip. Outputs are implemented with the addition of external resistors.
2. For input voltage compatibility, refer to the "Mixed Voltage Support" section of TN1177, LatticeECP3 sysIO Usage Guide.

SEE LatticeECP3 EA DATASHEET FOR CURRENT INFORMATION

sysI/O Differential Electrical Characteristics

LVDS25

Over Recommended Operating Conditions

Parameter	Description	Test Conditions	Min.	Typ.	Max.	Units
V_{INP}, V_{INM}	Input Voltage		0	—	2.4	V
V_{CM}	Input Common Mode Voltage	Half the Sum of the Two Inputs	0.05	—	2.35	V
V_{THD}	Differential Input Threshold	Difference Between the Two Inputs	+/-100	—	—	mV
I_{IN}	Input Current	Power On or Power Off	—	—	+/-10	µA
V_{OH}	Output High Voltage for V_{OP} or V_{OM}	R_T = 100 Ohm	—	1.38	1.60	V
V_{OL}	Output Low Voltage for V_{OP} or V_{OM}	R_T = 100 Ohm	0.9V	1.03	—	V
V_{OD}	Output Voltage Differential	(V_{OP} - V_{OM}), R_T = 100 Ohm	250	350	450	mV
ΔV_{OD}	Change in V_{OD} Between High and Low		—	—	50	mV
V_{OS}	Output Voltage Offset	(V_{OP} + V_{OM})/2, R_T = 100 Ohm	1.125	1.20	1.375	V
ΔV_{OS}	Change in V_{OS} Between H and L		—	—	50	mV
I_{SAB}	Output Short Circuit Current	V_{OD} = 0V Driver Outputs Shorted to Each Other	—	—	12	mA

Differential HSTL and SSTL

Differential HSTL and SSTL outputs are implemented as a pair of complementary single-ended outputs. All allowable single-ended output classes (class I and class II) are supported in this mode.

SEE LatticeECP3-EA DATA SHEET FOR CURRENT INFORMATION

sysCLOCK PLL Timing

Over Recommended Operating Conditions

Parameter	Descriptions	Conditions	Clock	Min.	Typ.	Max.	Units
f_{IN}	Input clock frequency (CLKI, CLKFB)		Edge clock	2	—	500	MHz
			Primary clock	2	—	420	MHz
f_{OUT}	Output clock frequency (CLKOP, CLKOS)		Edge clock	4	—	500	MHz
			Primary clock	4	—	420	MHz
f_{OUT1}	K-Divider output frequency	CLKOK		0.03125	—	250	MHz
f_{OUT2}	K2-Divider output frequency	CLKOK2		0.667	—	166	MHz
f_{VCO}	PLL VCO frequency			500	—	1000	MHz
f_{PFD}[3]	Phase detector input frequency		Edge clock	2	—	500	MHz
			Primary clock	2	—	420	MHz
AC Characteristics							
t_{PA}	Programmable delay unit			65	130	260	ps
t_{DT}	Output clock duty cycle (CLKOS, at 50% setting)		Edge clock	45	50	55	%
		$f_{OUT} \leq 250$ MHz	Primary clock	45	50	55	%
		$f_{OUT} > 250$MHz	Primary clock	30	50	70	%
t_{CPA}	Coarse phase shift error (CLKOS, at all settings)			-5	0	+5	% of period
t_{OPW}	Output clock pulse width high or low (CLKOS)			1.8	—	—	ns
t_{OPJIT}[1]	Output clock period jitter	$f_{OUT} \geq 420$MHz		—	—	200	p-p
		420MHz > $f_{OUT} \geq 100$MHz		—	—	250	p-p
		$f_{OUT} < 100$MHz		—	—	0.025	UIPP
t_{SK}	Input clock to output clock skew when N/M = integer			—	—	500	p-p
t_{LOCK}[2]	Lock time	2 to 25 MHz		—	—	200	us
		25 to 500 MHz		—	—	50	us
t_{UNLOCK}	Reset to PLL unlock time to ensure fast reset			—	—	50	ns
t_{HI}	Input clock high time	90% to 90%		0.5	—	—	ns
t_{LO}	Input clock low time	10% to 10%		0.5	—	—	ns
t_{IPJIT}	Input clock period jitter			—	—	400	p-p
t_{RST}	Reset signal pulse width high, RESETM, RESETK			10	—	—	ns
	Reset signal pulse width high, CNTRST			500	—	—	ns

1. Jitter sample is taken over 10,000 samples of the primary PLL output with clean reference clock with no additional I/O toggling.
2. Output clock is valid after t_{LOCK} for PLL reset and dynamic delay adjustment.
3. Period jitter and cycle-to-cycle jitter numbers are guaranteed for f_{PFD} > 4MHz. For f_{PFD} < 4MHz, the jitter numbers may not be met in certain conditions. Please contact the factory for f_{PFD} < 4MHz.

SEE LatticeECP3 EA DATA SHEET FOR CURRENT INFORMATION

PCI Express Electrical and Timing Characteristics

AC and DC Characteristics

Over Recommended Operating Conditions

Symbol	Description	Test Conditions	Min	Typ	Max	Units
Transmit[1]						
UI	Unit interval		399.88	400	400.12	ps
$V_{TX-DIFF_P-P}$	Differential peak-to-peak output voltage		0.8	1.0	1.2	V
$V_{TX-DE-RATIO}$	De-emphasis differential output voltage ratio		-3	-3.5	-4	dB
$V_{TX-CM-AC_P}$	RMS AC peak common-mode output voltage		—	—	20	mV
$V_{TX-RCV-DETECT}$	Amount of voltage change allowed during receiver detection		—	—	600	mV
$V_{TX-DC-CM}$	Tx DC common mode voltage		0	—	V_{CCOB} + 5%	V
$I_{TX-SHORT}$	Output short circuit current	V_{TX-D+}=0.0V V_{TX-D-}=0.0V	—	—	90	mA
$Z_{TX-DIFF-DC}$	Differential output impedance		80	100	120	Ohms
$RL_{TX-DIFF}$	Differential return loss		10	—	—	dB
RL_{TX-CM}	Common mode return loss		6.0	—	—	dB
$T_{TX-RISE}$	Tx output rise time	20 to 80%	0.125	—	—	UI
$T_{TX-FALL}$	Tx output fall time	20 to 80%	0.125	—	—	UI
$L_{TX-SKEW}$	Lane-to-lane static output skew for all lanes in port/link		—	—	1.3	ns
T_{TX-EYE}	Transmitter eye width		0.75	—	—	UI
$T_{TX-EYE-MEDIAN-TO-MAX-JITTER}$	Maximum time between jitter median and maximum deviation from median		—	—	0.125	UI
Receive[1, 2]						
UI	Unit Interval		399.88	400	400.12	ps
$V_{RX-DIFF_P-P}$	Differential peak-to-peak input voltage		0.34[3]	—	1.2	V
$V_{RX-IDLE-DET-DIFF_P-P}$	Idle detect threshold voltage		65	—	340[3]	mV
$V_{RX-CM-AC_P}$	Receiver common mode voltage for AC coupling		—	—	150	mV
$Z_{RX-DIFF-DC}$	DC differential input impedance		80	100	120	Ohms
Z_{RX-DC}	DC input impedance		40	50	60	Ohms
$Z_{RX-HIGH-IMP-DC}$	Power-down DC input impedance		200K	—	—	Ohms
$RL_{RX-DIFF}$	Differential return loss		10	—	—	dB
RL_{RX-CM}	Common mode return loss		6.0	—	—	dB
$T_{RX-IDLE-DET-DIFF-ENTERTIME}$	Maximum time required for receiver to recognize and signal an unexpected idle on link		—	—	—	ms

1. Values are measured at 2.5 Gbps.
2. Measured with external AC-coupling on the receiver.
3.Not in compliance with PCI Express 1.1 standard.

SEE LatticeECP3-EA DATA SHEET FOR CURRENT INFORMATION

SMPTE SD/HD-SDI/3G-SDI (Serial Digital Interface) Electrical and Timing Characteristics

AC and DC Characteristics

Table 3-19. Transmit

Symbol	Description	Test Conditions	Min.	Typ.	Max.	Units
BR_{SDO}	Serial data rate		270	—	2975	Mbps
$T_{JALIGNMENT}$ [2]	Serial output jitter, alignment	270 Mbps	—	—	0.20	UI
$T_{JALIGNMENT}$ [2]	Serial output jitter, alignment	1485 Mbps	—	—	0.20	UI
$T_{JALIGNMENT}$ [1, 2]	Serial output jitter, alignment	2970Mbps	—	—	0.30	UI
$T_{JTIMING}$	Serial output jitter, timing	270 Mbps	—	—	0.20	UI
$T_{JTIMING}$	Serial output jitter, timing	1485 Mbps	—	—	1.0	UI
$T_{JTIMING}$	Serial output jitter, timing	2970 Mbps	—	—	2.0	UI

Notes:
1. Timing jitter is measured in accordance with SMPTE RP 184-1996, SMPTE RP 192-1996 and the applicable serial data transmission standard, SMPTE 259M-1997 or SMPTE 292M (proposed). A color bar test pattern is used.The value of f_{SCLK} is 270 MHz or 360 MHz for SMPTE 259M, 540 MHz for SMPTE 344M or 1485 MHz for SMPTE 292M serial data rates. See the Timing Jitter Bandpass section.
2. Jitter is defined in accordance with SMPTE RP1 184-1996 as: jitter at an equipment output in the absence of input jitter.
3. All Tx jitter is measured at the output of an industry standard cable driver; connection to the cable driver is via a 50 ohm impedance differential signal from the Lattice SERDES device.
4. The cable driver drives: RL=75 ohm, AC-coupled at 270, 1485, or 2970 Mbps, RREFLVL=RREFPRE=4.75kohm 1%.

Table 3-20. Receive

Symbol	Description	Test Conditions	Min.	Typ.	Max.	Units
BR_{SDI}	Serial input data rate		270	—	2970	Mbps
CID	Stream of non-transitions (=Consecutive Identical Digits)		7(3G)/26(SMPTE Triple rates) @ 10-12 BER	—	—	Bits

Table 3-21. Reference Clock

Symbol	Description	Test Conditions	Min.	Typ.	Max.	Units
F_{VCLK}	Video output clock frequency		27	—	74.25	MHz
DC_V	Duty cycle, video clock		45	50	55	%

SEE LatticeECP3-EA DATA SHEET FOR CURRENT INFORMATION

Figure 3-15. Test Loads

Test Loads

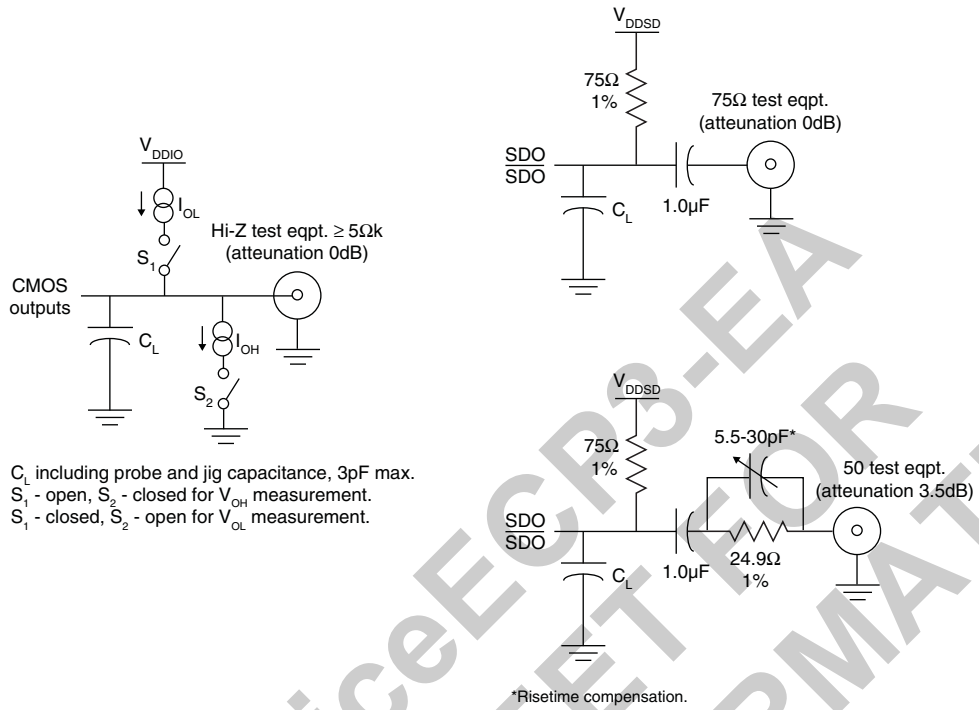

Timing Jitter Bandpass

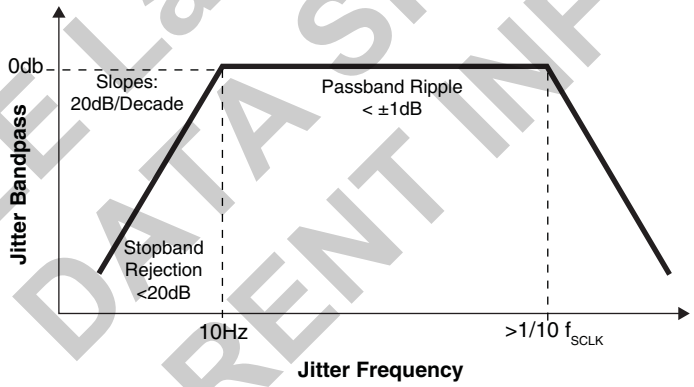

SEE LatticeECP3-EA DATA SHEET FOR CURRENT INFORMATION

Figure 3-20. Power-On-Reset (POR) Timing

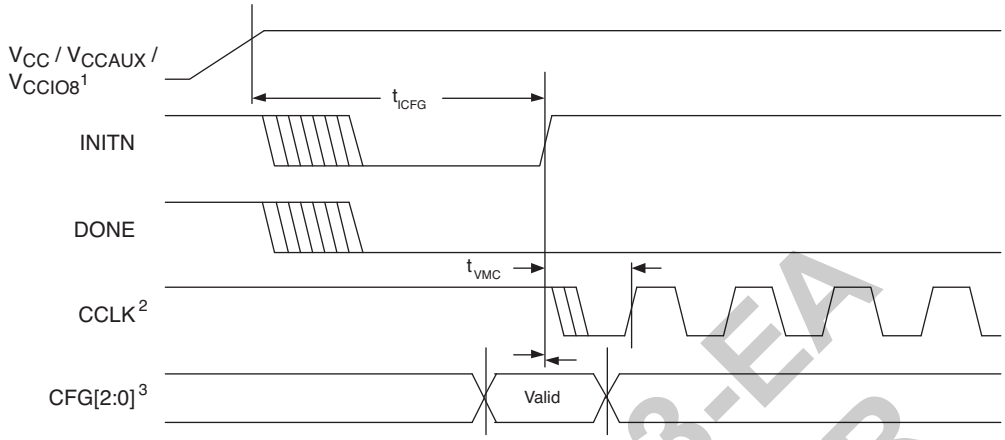

1. Time taken from V_{CC}, V_{CCAUX} or V_{CCIO8}, whichever is the last to cross the POR trip point.
2. Device is in a Master Mode (SPI, SPIm).
3. The CFG pins are normally static (hard wired).

Figure 3-21. sysCONFIG Port Timing

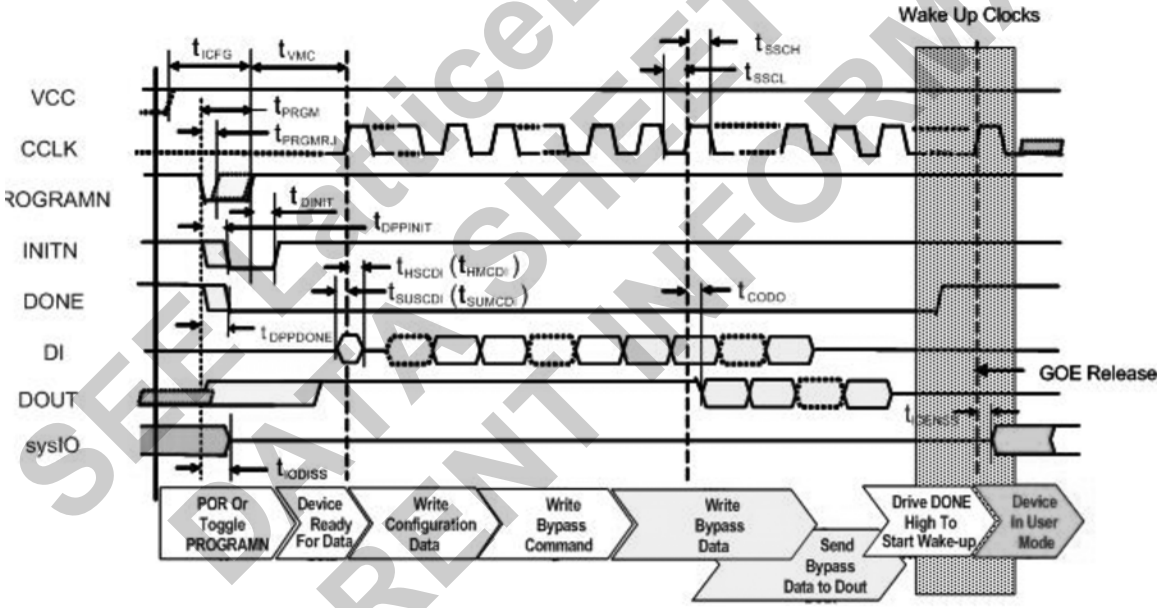

SEE LatticeECP3-EA DATASHEET FOR CURRENT INFORMATION

Point-to-Point LVDS (PPLVDS)

Over Recommended Operating Conditions

Description	Min.	Typ.	Max.	Units
Output driver supply (+/- 5%)	3.14	3.3	3.47	V
	2.25	2.5	2.75	V
Input differential voltage	100		400	mV
Input common mode voltage	0.2		2.3	V
Output differential voltage	130		400	mV
Output common mode voltage	0.5	0.8	1.4	V

RSDS

Over Recommended Operating Conditions

Parameter Symbol	Description	Min.	Typ.	Max.	Units
V_{OD}	Output voltage, differential, R_T = 100 ohms	100	200	600	mV
V_{OS}	Output voltage, common mode	0.5	1.2	1.5	V
I_{RSDS}	Differential driver output current	1	2	6	mA
V_{THD}	Input voltage differential	100	—	—	mV
V_{CM}	Input common mode voltage	0.3	—	1.5	V
T_R, T_F	Output rise and fall times, 20% to 80%	—	500	—	ps
T_{ODUTY}	Output clock duty cycle	35	50	65	%

Note: Data is for 2mA drive. Other differential driver current options are available.

SEE LatticeECP3-EA DATA SHEET FOR CURRENT INFORMATION

Signal Descriptions

Signal Name	I/O	Description
General Purpose		
P[Edge] [Row/Column Number]_[A/B]	I/O	[Edge] indicates the edge of the device on which the pad is located. Valid edge designations are L (Left), B (Bottom), R (Right), T (Top). [Row/Column Number] indicates the PFU row or the column of the device on which the PIC exists. When Edge is T (Top) or B (Bottom), only need to specify Column Number. When Edge is L (Left) or R (Right), only need to specify Row Number. [A/B] indicates the PIO within the PIC to which the pad is connected. Some of these user-programmable pins are shared with special function pins. These pins, when not used as special purpose pins, can be programmed as I/Os for user logic. During configuration the user-programmable I/Os are tri-stated with an internal pull-up resistor enabled. If any pin is not used (or not bonded to a package pin), it is also tri-stated with an internal pull-up resistor enabled after configuration.
P[Edge][Row Number]E_[A/B/C/D]	I	These general purpose signals are input-only pins and are located near the PLLs.
GSRN	I	Global RESET signal (active low). Any I/O pin can be GSRN.
NC	—	No connect.
RESERVED	—	This pin is reserved and should not be connected to anything on the board.
GND	—	Ground. Dedicated pins.
V_{CC}	—	Power supply pins for core logic. Dedicated pins.
V_{CCAUX}	—	Auxiliary power supply pin. This dedicated pin powers all the differential and referenced input buffers.
V_{CCIOx}	—	Dedicated power supply pins for I/O bank x.
V_{CCA}	—	SERDES, transmit, receive, PLL and reference clock buffer power supply.
$V_{CCPLL_[LOC]}$	—	General purpose PLL supply pins where LOC=L (left) or R (right).
V_{REF1_x}, V_{REF2_x}	—	Reference supply pins for I/O bank x. Pre-determined pins in each bank are assigned as V_{REF} inputs. When not used, they may be used as I/O pins.
VTTx	—	Power supply for on-chip termination of I/Os (Required for DDR3 and LVDS at 1.25Gbps).
XRES[1]	—	10K ohm +/-1% resistor must be connected between this pad and ground.
PLL, DLL and Clock Functions		
[LOC][num]_GPLL[T, C]_IN_[index]	I	General Purpose PLL (GPLL) input pads: LUM, LLM, RUM, RLM, num = row from center, T = true and C = complement, index A,B,C...at each side.
[LOC][num]_GPLL[T, C]_FB_[index]	I	Optional feedback GPLL input pads: LUM, LLM, RUM, RLM, num = row from center, T = true and C = complement, index A,B,C...at each side.
[LOC]0_GDLLT_IN_[index]	I/O	General Purpose DLL (GDLL) input pads where LOC=RUM or LUM, T is True Complement, index is A or B.
[LOC]0_GDLLT_FB_[index]	I/O	Optional feedback GDLL input pads where LOC=RUM or LUM, T is True Complement, index is A or B.
PCLK[T, C][n:0]_[3:0]	I	Primary Clock pads, T = true and C = complement, n per side, indexed by bank and 0, 1, 2, 3 within bank.

SEE Lattice ECP3-EA DATA SHEET FOR CURRENT INFORMATION

© 2010 Lattice Semiconductor Corp. All Lattice trademarks, registered trademarks, patents, and disclaimers are as listed at www.latticesemi.com/legal. All other brand or product names are trademarks or registered trademarks of their respective holders. The specifications and information herein are subject to change without notice.

Part Number	Voltage	Grade	Package	Pins	Temp.	LUTs (K)
LFE3-150EA-6FN672CTW*	1.2V	-6	Lead-Free fpBGA	672	COM	149
LFE3-150EA-7FN672CTW*	1.2V	-7	Lead-Free fpBGA	672	COM	149
LFE3-150EA-8FN672CTW*	1.2V	-8	Lead-Free fpBGA	672	COM	149
LFE3-150EA-6FN1156CTW*	1.2V	-6	Lead-Free fpBGA	1156	COM	149
LFE3-150EA-7FN1156CTW*	1.2V	-7	Lead-Free fpBGA	1156	COM	149
LFE3-150EA-8FN1156CTW*	1.2V	-8	Lead-Free fpBGA	1156	COM	149

*Note: Specifications for the LFE3-150EA-*sp*FN*pkg*CTW and LFE3-150EA-*sp*FN*pkg*ITW devices, (where *sp* is the speed and *pkg* is the package), are the same as the LFE3-150EA-*sp*FN*pkg*C and LFE3-150EA-*sp*FN*pkg*I devices respectively, except as specified below.

- The CTC (Clock Tolerance Circuit) inside the SERDES hard PCS in the TW device is not functional but it can be bypassed and implemented in soft IP.
- The SERDES XRES pin on the TW device passes CDM testing at 250V.

SEE LatticeECP3-EA DATA SHEET FOR CURRENT INFORMATION

LatticeECP3 Family Data Sheet Revision History

Date	Version	Section	Change Summary
February 2009	01.0	—	Initial release.
May 2009	01.1	All	Removed references to Parallel burst mode Flash.
		Introduction	Features - Changed 250 Mbps to 230 Mbps in Embedded SERDES bulleted section and added a footnote to indicate 230 Mbps applies to 8b10b and 10b12b applications.
			Updated data for ECP3-17 in LatticeECP3 Family Selection Guide table.
			Changed embedded memory from 552 to 700 Kbits in LatticeECP3 Family Selection Guide table.
		Architecture	Updated description for CLKFB in General Purpose PLL Diagram.
			Corrected Primary Clock Sources text section.
			Corrected Secondary Clock/Control Sources text section.
			Corrected Secondary Clock Regions table.
			Corrected note below Detailed sysDSP Slice Diagram.
			Corrected Clock, Clock Enable, and Reset Resources text section.
			Corrected ECP3-17 EBR number in Embedded SRAM in the LatticeECP3 Family table.
			Added On-Chip Termination Options for Input Modes table.
			Updated Available SERDES Quads per LatticeECP3 Devices table.
			Updated Simplified Channel Block Diagram for SERDES/PCS Block diagram.
			Updated Device Configuration text section.
			Corrected software default value of MCLK to be 2.5 MHz.
		DC and Switching Characteristics	Updated VCCOB Min/Max data in Recommended Operating Conditions table.
			Corrected footnote 2 in sysIO Recommended Operating Conditions table.
			Added added footnote 7 for t_{SKEW_PRIB} to External Switching Characteristics table.
			Added 2-to-1 Gearing text section and table.
			Updated External Reference Clock Specification (refclkp/refclkn) table.
			LatticeECP3 sysCONFIG Port Timing Specifications - updated t_{DINIT} information.
			Added sysCONFIG Port Timing waveform.
			Serial Input Data Specifications table, delete Typ data for $V_{RX\text{-}DIFF\text{-}S}$.
			Added footnote 4 to sysCLOCK PLL Timing table for t_{PFD}.
			Added SERDES/PCS Block Latency Breakdown table.
			External Reference Clock Specifications table, added footnote 4, add symbol name vREF-IN-DIFF.
			Added SERDES External Reference Clock Waveforms.
			Updated Serial Output Timing and Levels table.
			Pin-to-pin performance table, changed "typically 3% slower" to "typically slower".

SEE Lattice ECP3 EA DATA SHEET FOR CURRENT INFORMATION

© 2010 Lattice Semiconductor Corp. All Lattice trademarks, registered trademarks, patents, and disclaimers are as listed at www.latticesemi.com/legal. All other brand or product names are trademarks or registered trademarks of their respective holders. The specifications and information herein are subject to change without notice.