Welcome to E-XFL.COM

Understanding Embedded - Microprocessors

Embedded microprocessors are specialized computing chips designed to perform specific tasks within an embedded system. Unlike general-purpose microprocessors found in personal computers, embedded microprocessors are tailored for dedicated functions within larger systems, offering optimized performance, efficiency, and reliability. These microprocessors are integral to the operation of countless electronic devices, providing the computational power necessary for controlling processes, handling data, and managing communications.

Applications of Embedded - Microprocessors

Embedded microprocessors are utilized across a broad spectrum of applications, making them indispensable in

Details	
Product Status	Obsolete
Core Processor	MPC8xx
Number of Cores/Bus Width	1 Core, 32-Bit
Speed	66MHz
Co-Processors/DSP	Communications; CPM
RAM Controllers	DRAM
Graphics Acceleration	No
Display & Interface Controllers	-
Ethernet	10Mbps (4)
SATA	-
USB	-
Voltage - I/O	3.3V
Operating Temperature	-40°C ~ 95°C (TA)
Security Features	-
Package / Case	357-BBGA
Supplier Device Package	357-PBGA (25x25)
Purchase URL	https://www.e-xfl.com/product-detail/nxp-semiconductors/kmpc860enczq66d4

2 Features

The following list summarizes the key MPC860 features:

- Embedded single-issue, 32-bit core (implementing the Power Architecture technology) with thirty-two 32-bit general-purpose registers (GPRs)
  - The core performs branch prediction with conditional prefetch without conditional execution.
  - 4- or 8-Kbyte data cache and 4- or 16-Kbyte instruction cache (see Table 1)
    - 16-Kbyte instruction caches are four-way, set-associative with 256 sets; 4-Kbyte instruction caches are two-way, set-associative with 128 sets.
    - 8-Kbyte data caches are two-way, set-associative with 256 sets; 4-Kbyte data caches are two-way, set-associative with 128 sets.
    - Cache coherency for both instruction and data caches is maintained on 128-bit (4-word) cache blocks.
    - Caches are physically addressed, implement a least recently used (LRU) replacement algorithm, and are lockable on a cache block basis.
  - MMUs with 32-entry TLB, fully-associative instruction, and data TLBs
  - MMUs support multiple page sizes of 4-, 16-, and 512-Kbytes, and 8-Mbytes; 16 virtual address spaces and 16 protection groups
  - Advanced on-chip-emulation debug mode
- Up to 32-bit data bus (dynamic bus sizing for 8, 16, and 32 bits)
- 32 address lines
- Operates at up to 80 MHz
- Memory controller (eight banks)
  - Contains complete dynamic RAM (DRAM) controller
  - Each bank can be a chip select or $\overline{\text{RAS}}$ to support a DRAM bank.
  - Up to 15 wait states programmable per memory bank
  - Glueless interface to DRAM, SIMMS, SRAM, EPROM, Flash EPROM, and other memory devices
  - DRAM controller programmable to support most size and speed memory interfaces
  - Four $\overline{\text{CAS}}$ lines, four $\overline{\text{WE}}$ lines, and one $\overline{\text{OE}}$ line
  - Boot chip-select available at reset (options for 8-, 16-, or 32-bit memory)
  - Variable block sizes (32 Kbytes to 256 Mbytes)
  - Selectable write protection
  - On-chip bus arbitration logic
- General-purpose timers
  - Four 16-bit timers or two 32-bit timers
  - Gate mode can enable/disable counting
  - Interrupt can be masked on reference match and event capture.

3 Maximum Tolerated Ratings

This section provides the maximum tolerated voltage and temperature ranges for the MPC860. Table 2 provides the maximum ratings.

This device contains circuitry protecting against damage due to high-static voltage or electrical fields; however, it is advised that normal precautions be taken to avoid application of any voltages higher than maximum-rated voltages to this high-impedance circuit. Reliability of operation is enhanced if unused inputs are tied to an appropriate logic voltage level (for example, either GND or V_{DD}).

Table 2. Maximum Tolerated Ratings

(GND = 0 V)

Rating	Symbol	Value	Unit
Supply voltage[1]	V_{DDH}	–0.3 to 4.0	V
	V_{DDL}	–0.3 to 4.0	V
	KAPWR	–0.3 to 4.0	V
	V_{DDSYN}	–0.3 to 4.0	V
Input voltage[2]	V_{in}	GND – 0.3 to V_{DDH}	V
Temperature[3] (standard)	$T_{A(min)}$	0	°C
	$T_{j(max)}$	95	°C
Temperature[3] (extended)	$T_{A(min)}$	–40	°C
	$T_{j(max)}$	95	°C
Storage temperature range	T_{stg}	–55 to 150	°C

1 The power supply of the device must start its ramp from 0.0 V.

2 Functional operating conditions are provided with the DC electrical specifications in Table 6. Absolute maximum ratings are stress ratings only; functional operation at the maxima is not guaranteed. Stress beyond those listed may affect device reliability or cause permanent damage to the device.
Caution: All inputs that tolerate 5 V cannot be more than 2.5 V greater than the supply voltage. This restriction applies to power-up and normal operation (that is, if the MPC860 is unpowered, voltage greater than 2.5 V must not be applied to its inputs).

3 Minimum temperatures are guaranteed as ambient temperature, T_A. Maximum temperatures are guaranteed as junction temperature, T_j.

Table 7. Bus Operation Timings (continued)

Num	Characteristic	33 MHz		40 MHz		50 MHz		66 MHz		Unit
		Min	Max	Min	Max	Min	Max	Min	Max	
B23	CLKOUT rising edge to $\overline{CS}$ negated GPCM read access, GPCM write access ACS = 00, TRLX = 0, and CSNT = 0	2.00	8.00	2.00	8.00	2.00	8.00	2.00	8.00	ns
B24	A(0:31) and BADDR(28:30) to $\overline{CS}$ asserted GPCM ACS = 10, TRLX = 0	5.58	—	4.25	—	3.00	—	1.79	—	ns
B24a	A(0:31) and BADDR(28:30) to $\overline{CS}$ asserted GPCM ACS = 11, TRLX = 0	13.15	—	10.50	—	8.00	—	5.58	—	ns
B25	CLKOUT rising edge to $\overline{OE}$, $\overline{WE}$(0:3) asserted	—	9.00	—	9.00	—	9.00	—	9.00	ns
B26	CLKOUT rising edge to $\overline{OE}$ negated	2.00	9.00	2.00	9.00	2.00	9.00	2.00	9.00	ns
B27	A(0:31) and BADDR(28:30) to $\overline{CS}$ asserted GPCM ACS = 10, TRLX = 1	35.88	—	29.25	—	23.00	—	16.94	—	ns
B27a	A(0:31) and BADDR(28:30) to $\overline{CS}$ asserted GPCM ACS = 11, TRLX = 1	43.45	—	35.50	—	28.00	—	20.73	—	ns
B28	CLKOUT rising edge to $\overline{WE}$(0:3) negated GPCM write access CSNT = 0	—	9.00	—	9.00	—	9.00	—	9.00	ns
B28a	CLKOUT falling edge to $\overline{WE}$(0:3) negated GPCM write access TRLX = 0, 1, CSNT = 1, EBDF = 0	7.58	14.33	6.25	13.00	5.00	11.75	3.80	10.54	ns
B28b	CLKOUT falling edge to $\overline{CS}$ negated GPCM write access TRLX = 0, 1, CSNT = 1, ACS = 10, or ACS = 11, EBDF = 0	—	14.33	—	13.00	—	11.75	—	10.54	ns
B28c	CLKOUT falling edge to $\overline{WE}$(0:3) negated GPCM write access TRLX = 0, 1, CSNT = 1 write access TRLX = 0, CSNT = 1, EBDF = 1	10.86	17.99	8.88	16.00	7.00	14.13	5.18	12.31	ns
B28d	CLKOUT falling edge to $\overline{CS}$ negated GPCM write access TRLX = 0, 1, CSNT = 1, ACS = 10, or ACS = 11, EBDF = 1	—	17.99	—	16.00	—	14.13	—	12.31	ns
B29	$\overline{WE}$(0:3) negated to D(0:31), DP(0:3) High-Z GPCM write access CSNT = 0, EBDF = 0	5.58	—	4.25	—	3.00	—	1.79	—	ns
B29a	$\overline{WE}$(0:3) negated to D(0:31), DP(0:3) High-Z GPCM write access, TRLX = 0, CSNT = 1, EBDF = 0	13.15	—	10.5	—	8.00	—	5.58	—	ns
B29b	$\overline{CS}$ negated to D(0:31), DP(0:3), High-Z GPCM write access, ACS = 00, TRLX = 0, 1, and CSNT = 0	5.58	—	4.25	—	3.00	—	1.79	—	ns
B29c	$\overline{CS}$ negated to D(0:31), DP(0:3) High-Z GPCM write access, TRLX = 0, CSNT = 1, ACS = 10, or ACS = 11, EBDF = 0	13.15	—	10.5	—	8.00	—	5.58	—	ns

Figure 5 provides the timing for the synchronous output signals.

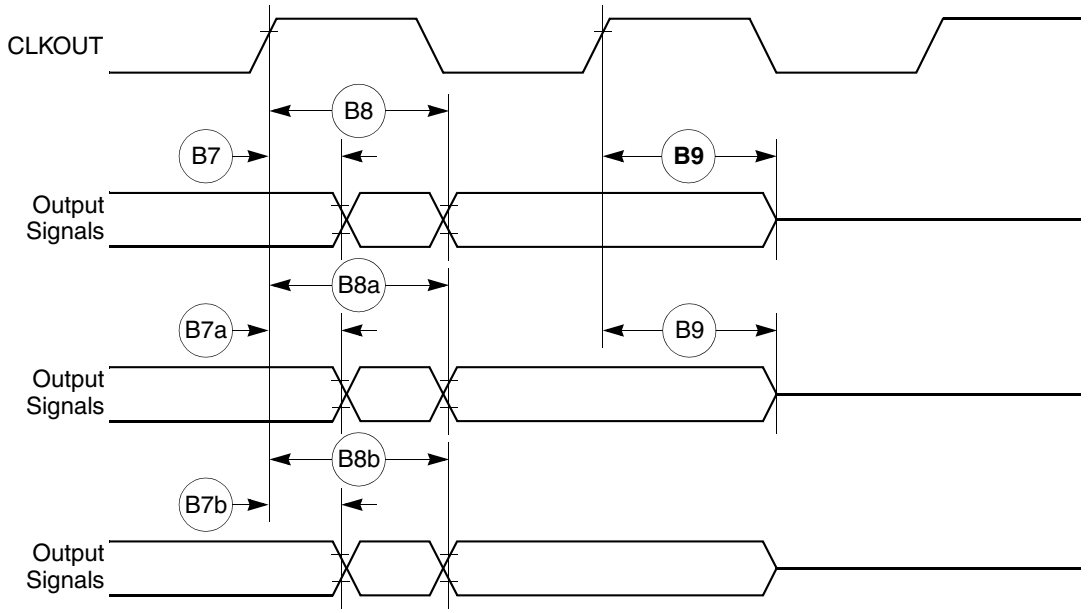

Figure 5. Synchronous Output Signals Timing

Figure 6 provides the timing for the synchronous active pull-up and open-drain output signals.

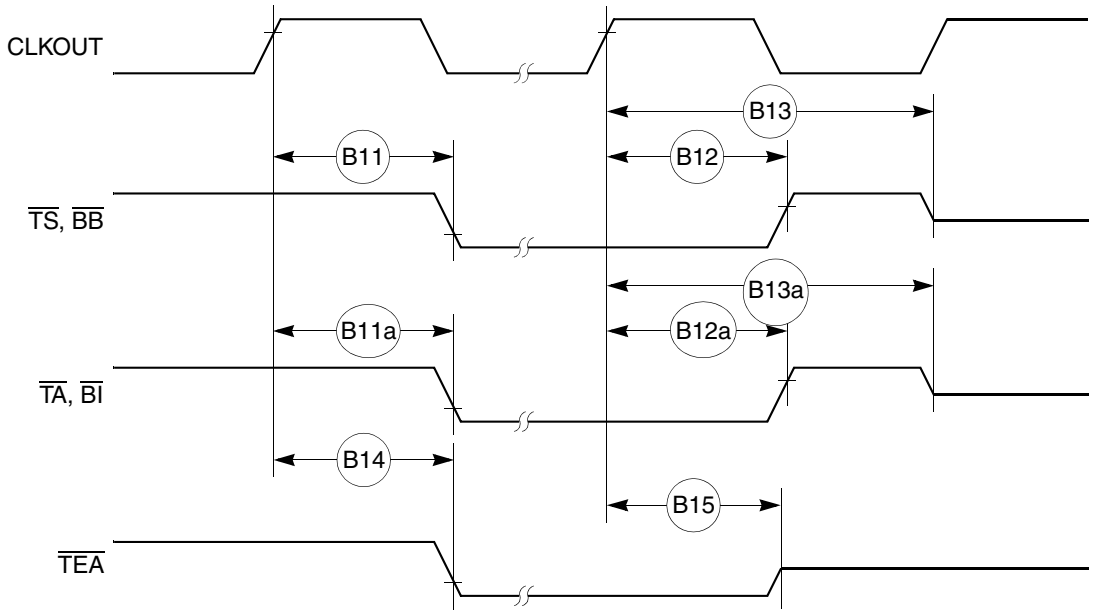

Figure 6. Synchronous Active Pull-Up Resistor and Open-Drain Outputs Signals Timing

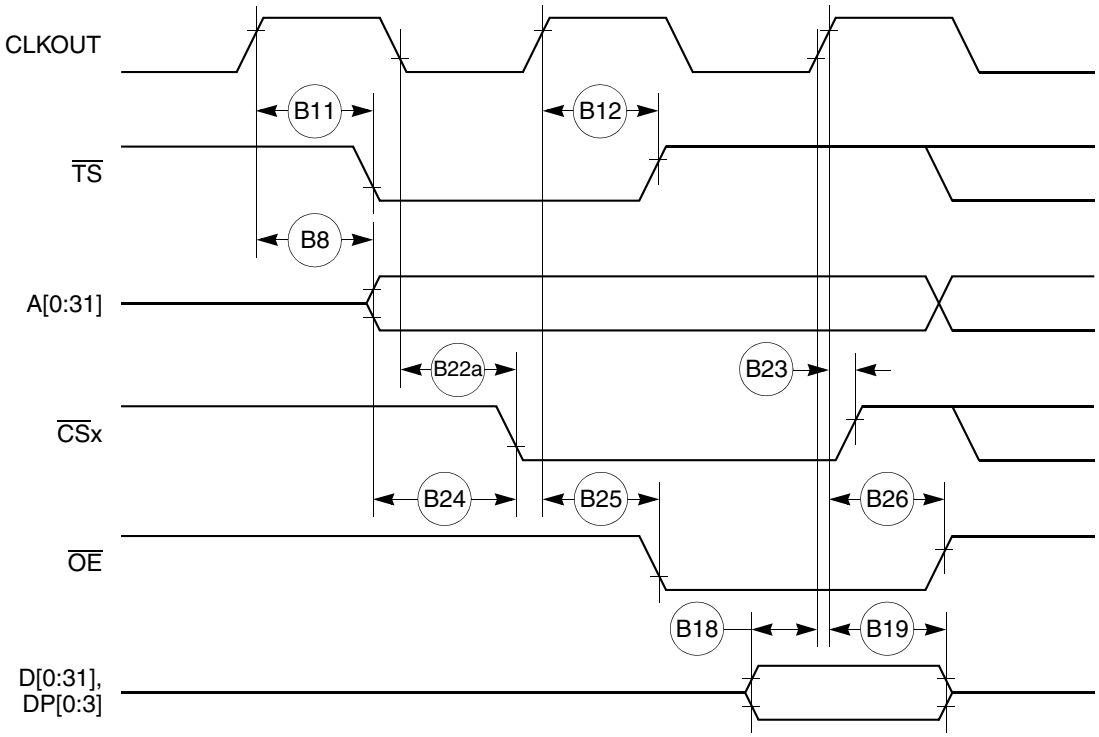

Figure 11. External Bus Read Timing (GPCM Controlled—TRLX = 0, ACS = 10)

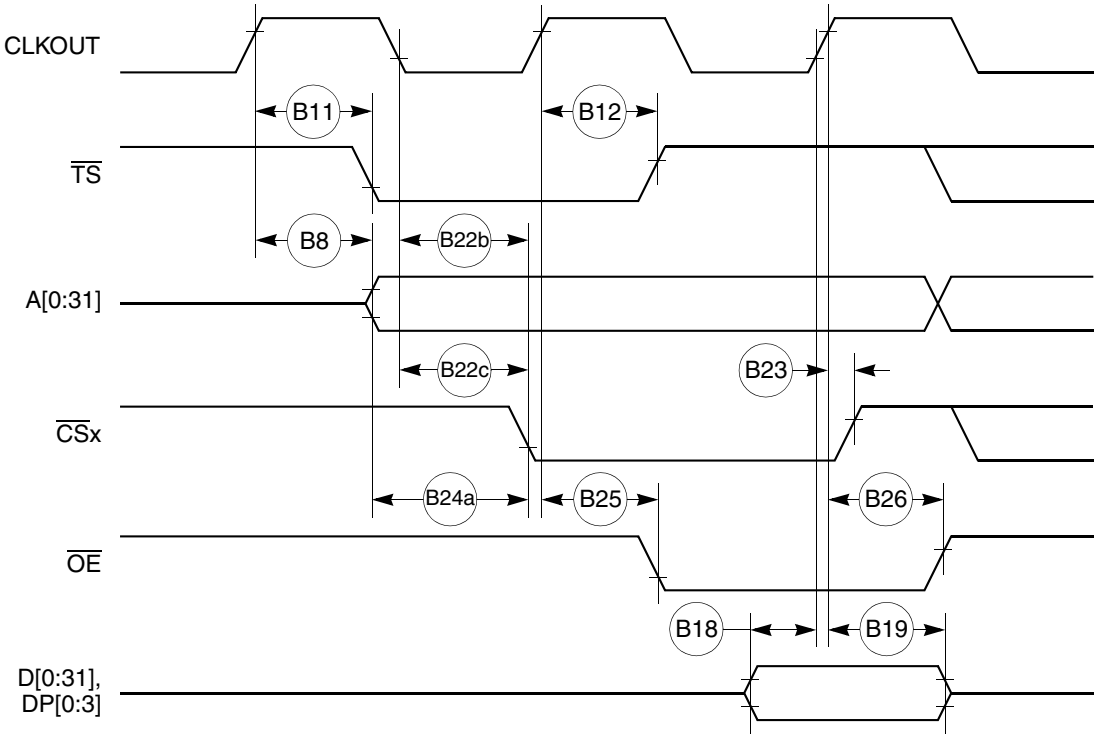

Figure 12. External Bus Read Timing (GPCM Controlled—TRLX = 0, ACS = 11)

Figure 14 through Figure 16 provide the timing for the external bus write controlled by various GPCM factors.

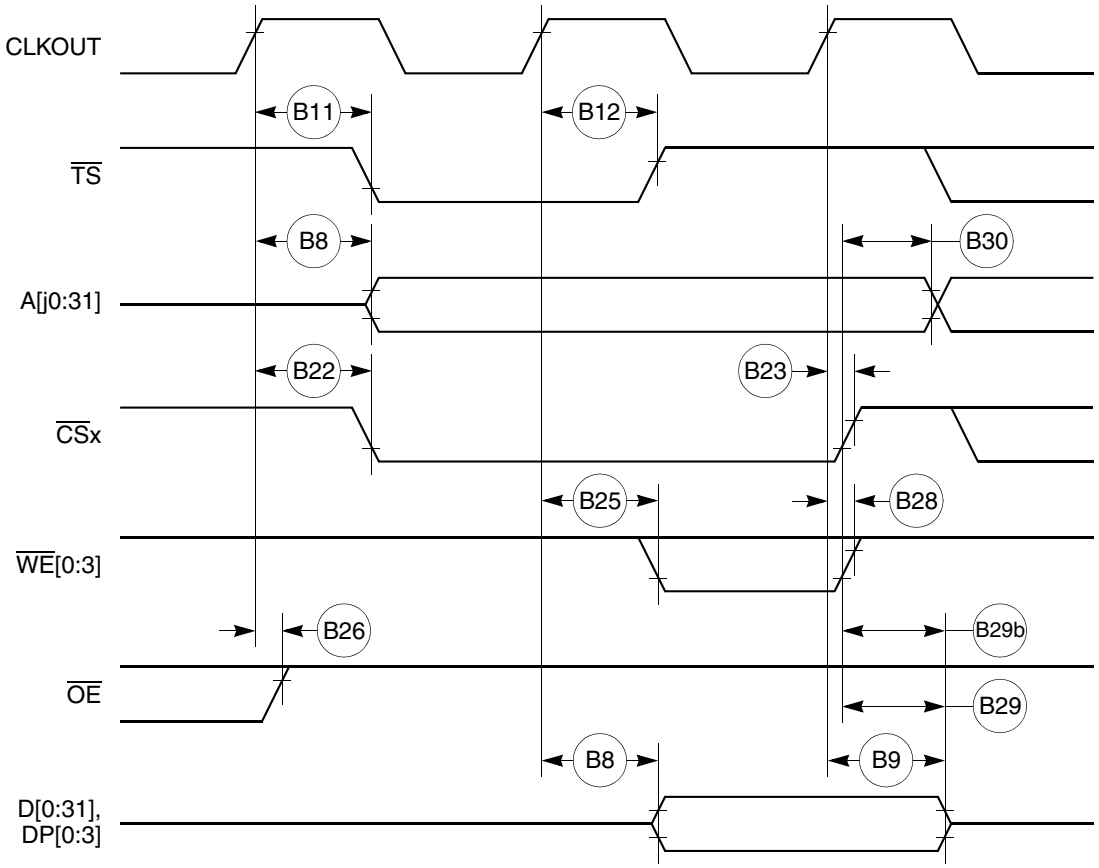

Figure 14. External Bus Write Timing (GPCM Controlled—TRLX = 0 or 1, CSNT = 0)

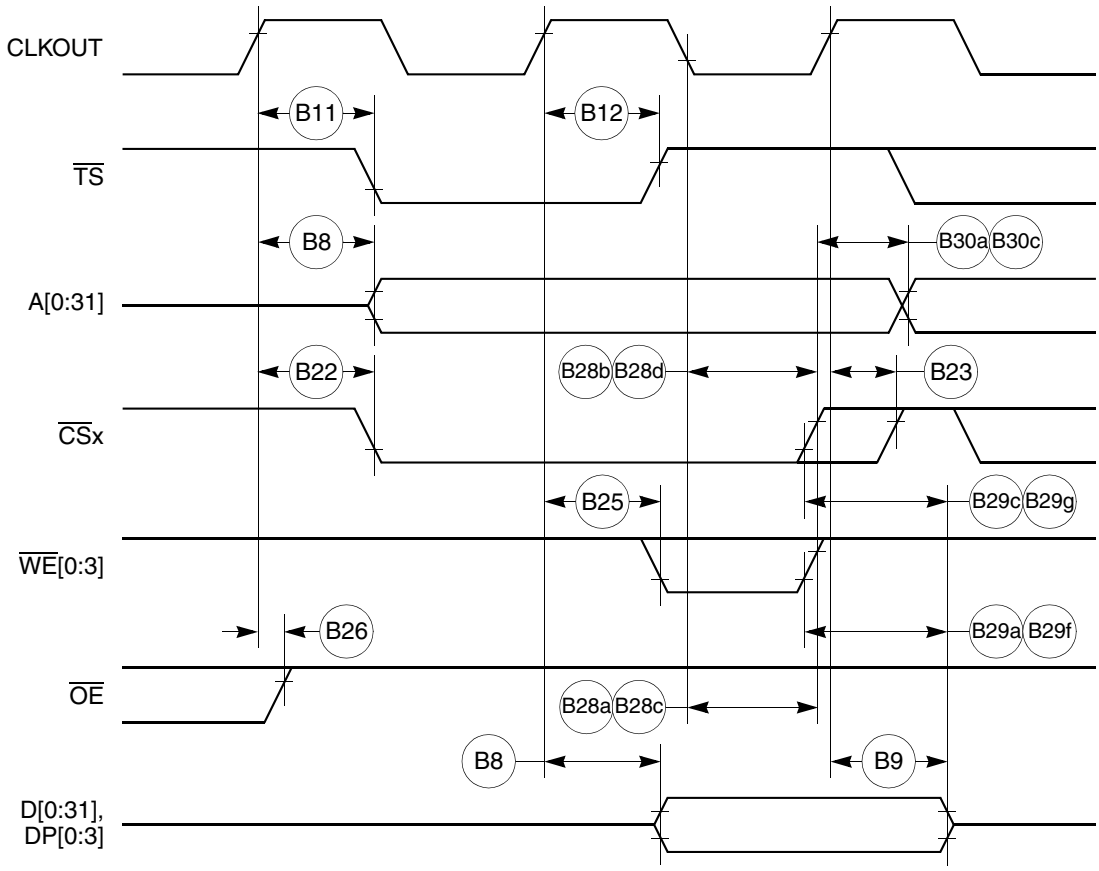

Figure 15. External Bus Write Timing (GPCM Controlled—TRLX = 0 or 1, CSNT = 1)

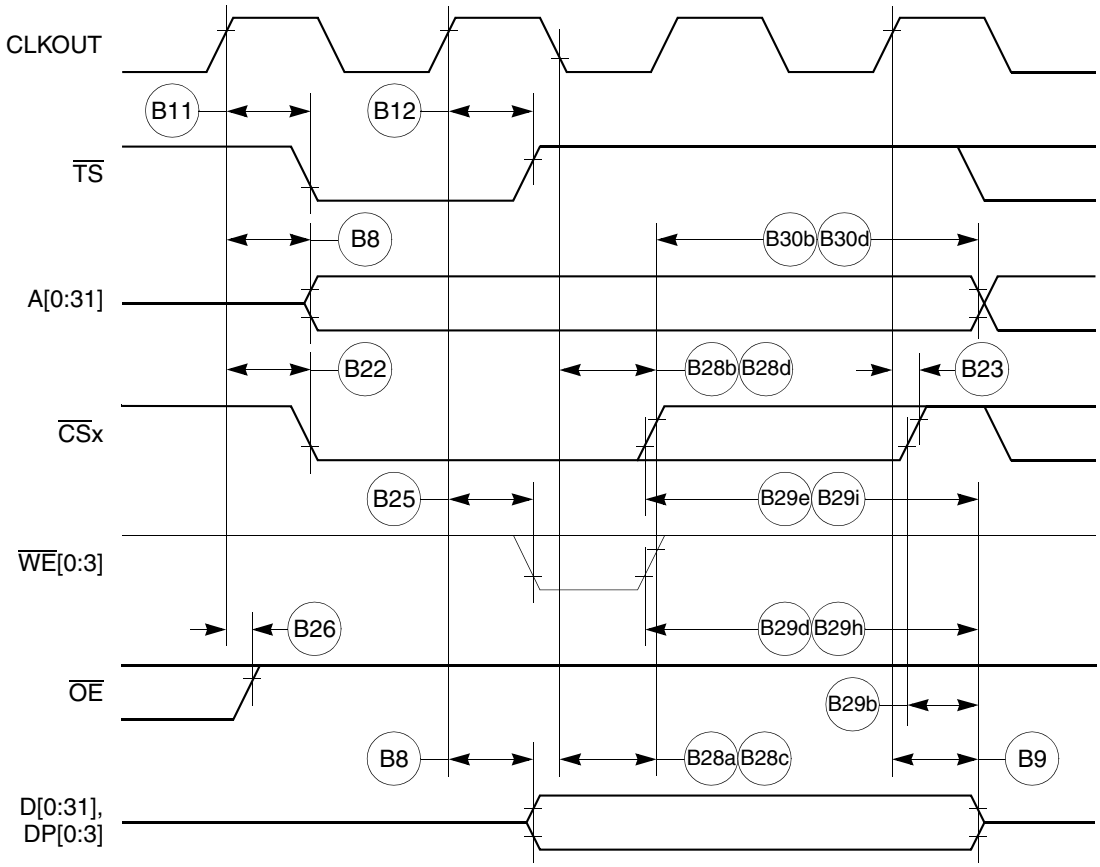

Figure 16. External Bus Write Timing (GPCM Controlled—TRLX = 0 or 1, CSNT = 1)

Figure 18 provides the timing for the asynchronous asserted UPWAIT signal controlled by the UPM.

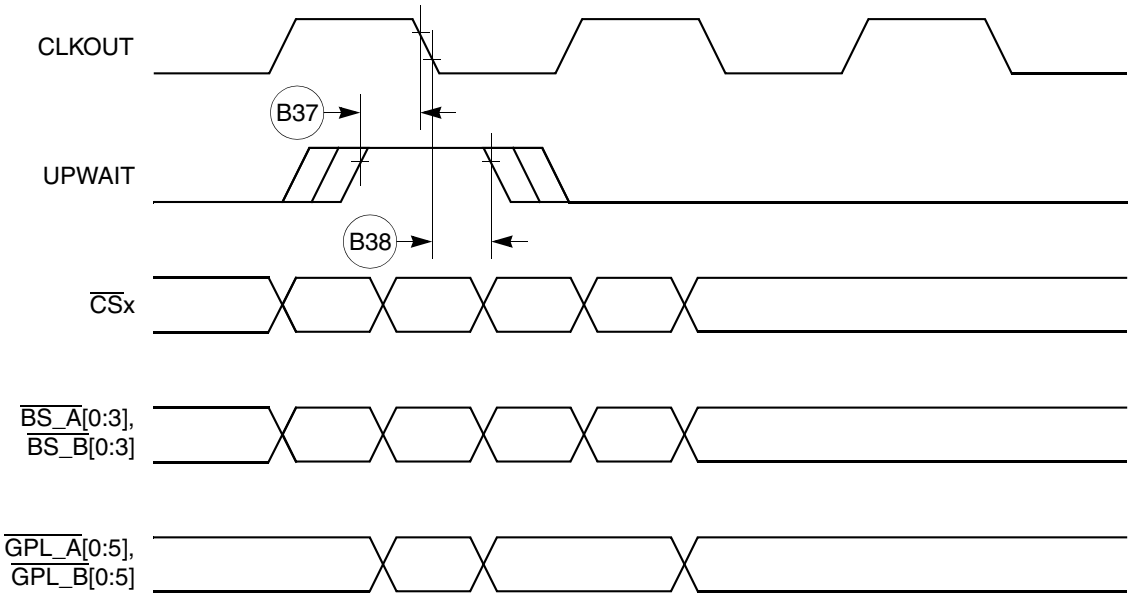

Figure 18. Asynchronous UPWAIT Asserted Detection in UPM Handled Cycles Timing

Figure 19 provides the timing for the asynchronous negated UPWAIT signal controlled by the UPM.

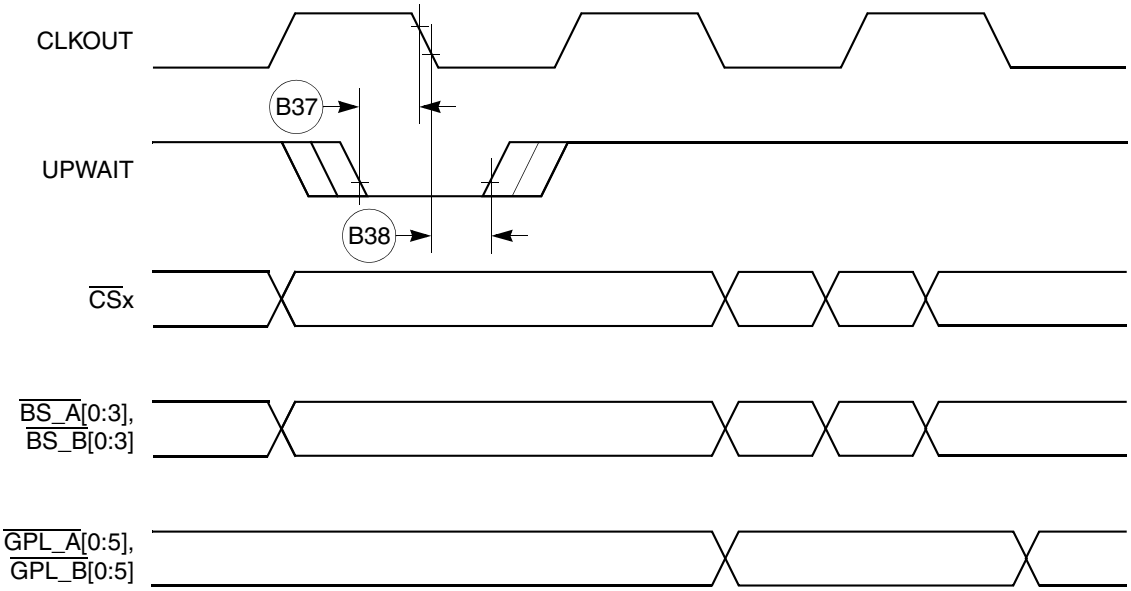

Figure 19. Asynchronous UPWAIT Negated Detection in UPM Handled Cycles Timing

Figure 20 provides the timing for the synchronous external master access controlled by the GPCM.

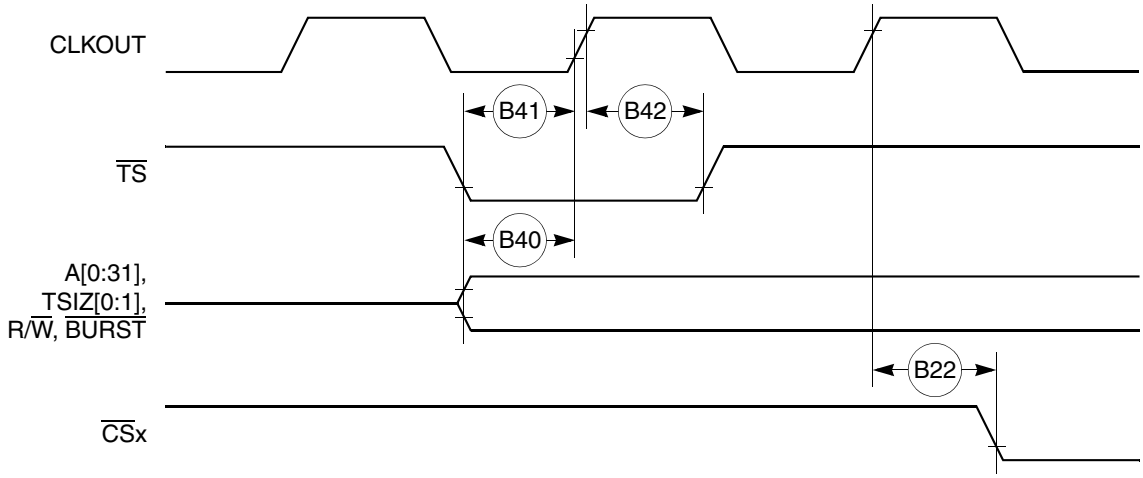

Figure 20. Synchronous External Master Access Timing (GPCM Handled ACS = 00)

Figure 21 provides the timing for the asynchronous external master memory access controlled by the GPCM.

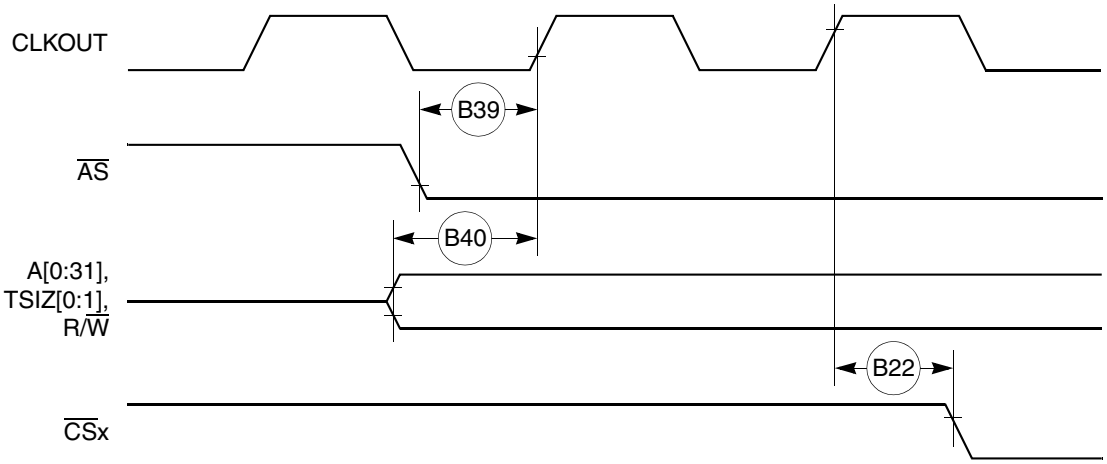

Figure 21. Asynchronous External Master Memory Access Timing (GPCM Controlled—ACS = 00)

Figure 22 provides the timing for the asynchronous external master control signals negation.

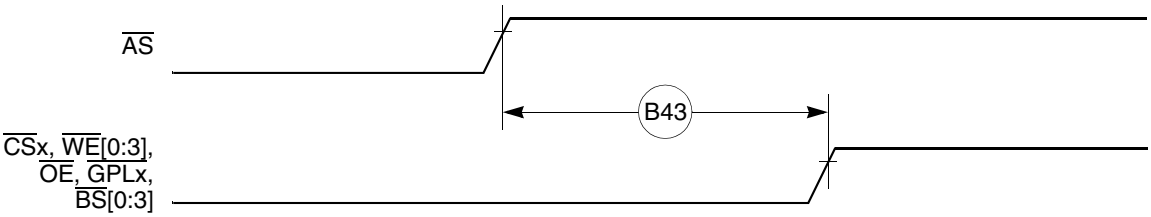

Figure 22. Asynchronous External Master—Control Signals Negation Timing

Figure 25 provides the PCMCIA access cycle timing for the external bus read.

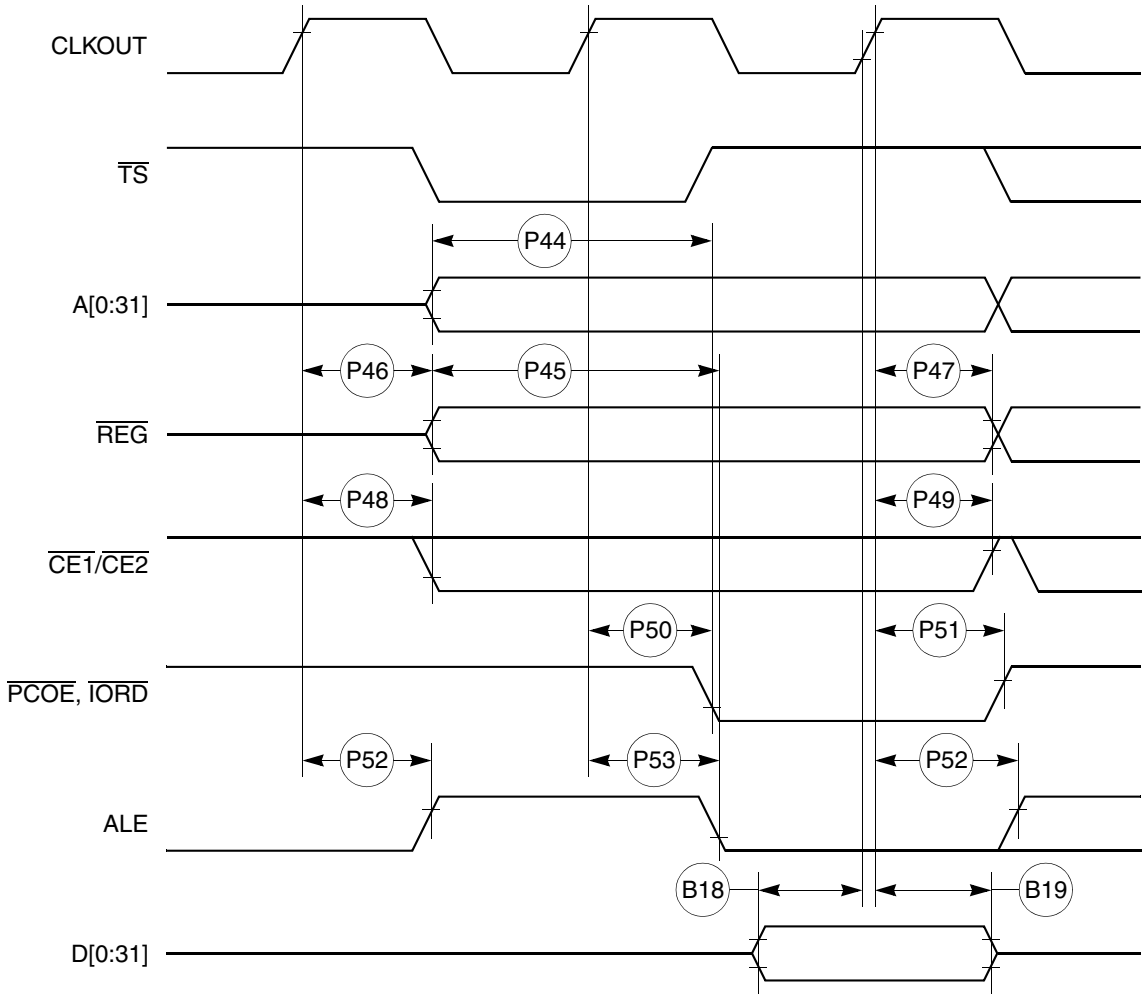

Figure 25. PCMCIA Access Cycle Timing External Bus Read

Table 12 shows the reset timing for the MPC860.

Table 12. Reset Timing

Num	Characteristic	33 MHz		40 MHz		50 MHz		66 MHz		Unit
		Min	Max	Min	Max	Min	Max	Min	Max	
R69	CLKOUT to $\overline{\text{HRESET}}$ high impedance	—	20.00	—	20.00	—	20.00	—	20.00	ns
R70	CLKOUT to $\overline{\text{SRESET}}$ high impedance	—	20.00	—	20.00	—	20.00	—	20.00	ns
R71	$\overline{\text{RSTCONF}}$ pulse width	515.15	—	425.00		340.00	—	257.58	—	ns
R72	—	—	—	—	—	—	—	—	—	
R73	Configuration data to HRESET rising edge setup time	504.55	—	425.00	—	350.00	—	277.27	—	ns
R74	Configuration data to $\overline{\text{RSTCONF}}$ rising edge setup time	350.00	—	350.00	—	350.00	—	350.00	—	ns
R75	Configuration data hold time after $\overline{\text{RSTCONF}}$ negation	0.00	—	0.00	—	0.00	—	0.00	—	ns
R76	Configuration data hold time after $\overline{\text{HRESET}}$ negation	0.00	—	0.00	—	0.00	—	0.00	—	ns
R77	$\overline{\text{HRESET}}$ and $\overline{\text{RSTCONF}}$ asserted to data out drive	—	25.00		25.00	—	25.00	—	25.00	ns
R78	$\overline{\text{RSTCONF}}$ negated to data out high impedance	—	25.00	—	25.00	—	25.00	—	25.00	ns
R79	CLKOUT of last rising edge before chip three-state $\overline{\text{HRESET}}$ to data out high impedance	—	25.00	—	25.00	—	25.00	—	25.00	ns
R80	DSDI, DSCK setup	90.91	—	75.00	—	60.00	—	45.45	—	ns
R81	DSDI, DSCK hold time	0.00	—	0.00	—	0.00	—	0.00	—	ns
R82	$\overline{\text{SRESET}}$ negated to CLKOUT rising edge for DSDI and DSCK sample	242.42	—	200.00	—	160.00	—	121.21	—	ns

11 CPM Electrical Characteristics

This section provides the AC and DC electrical specifications for the communications processor module (CPM) of the MPC860.

11.1 PIP/PIO AC Electrical Specifications

Table 14 provides the PIP/PIO AC timings as shown in Figure 39 through Figure 43.

Table 14. PIP/PIO Timing

Num	Characteristic	All Frequencies		Unit
		Min	Max	
21	Data-in setup time to STBI low	0	—	ns
22	Data-in hold time to STBI high	2.5 – t3[1]	—	CLK
23	STBI pulse width	1.5	—	CLK
24	STBO pulse width	1 CLK – 5 ns	—	ns
25	Data-out setup time to STBO low	2	—	CLK
26	Data-out hold time from STBO high	5	—	CLK
27	STBI low to STBO low (Rx interlock)	—	2	CLK
28	STBI low to STBO high (Tx interlock)	2	—	CLK
29	Data-in setup time to clock high	15	—	ns
30	Data-in hold time from clock high	7.5	—	ns
31	Clock low to data-out valid (CPU writes data, control, or direction)	—	25	ns

[1] t3 = Specification 23.

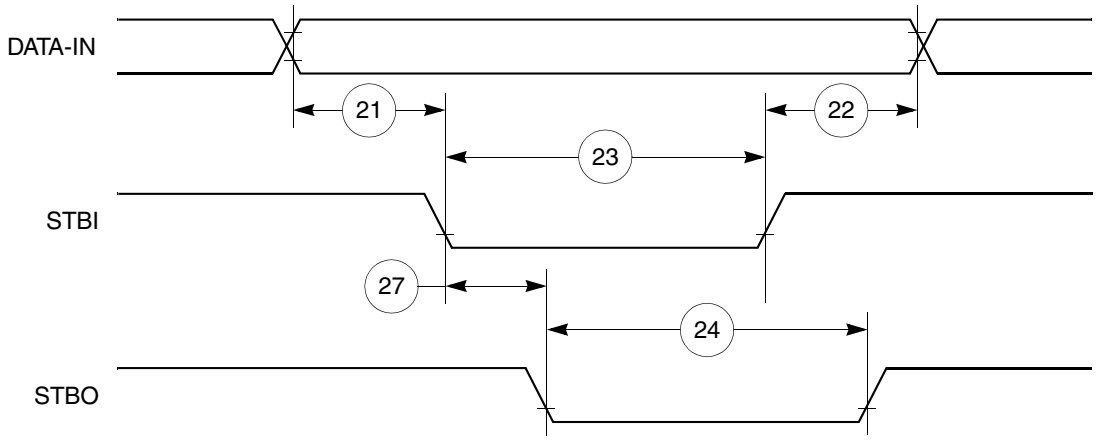

Figure 39. PIP Rx (Interlock Mode) Timing Diagram

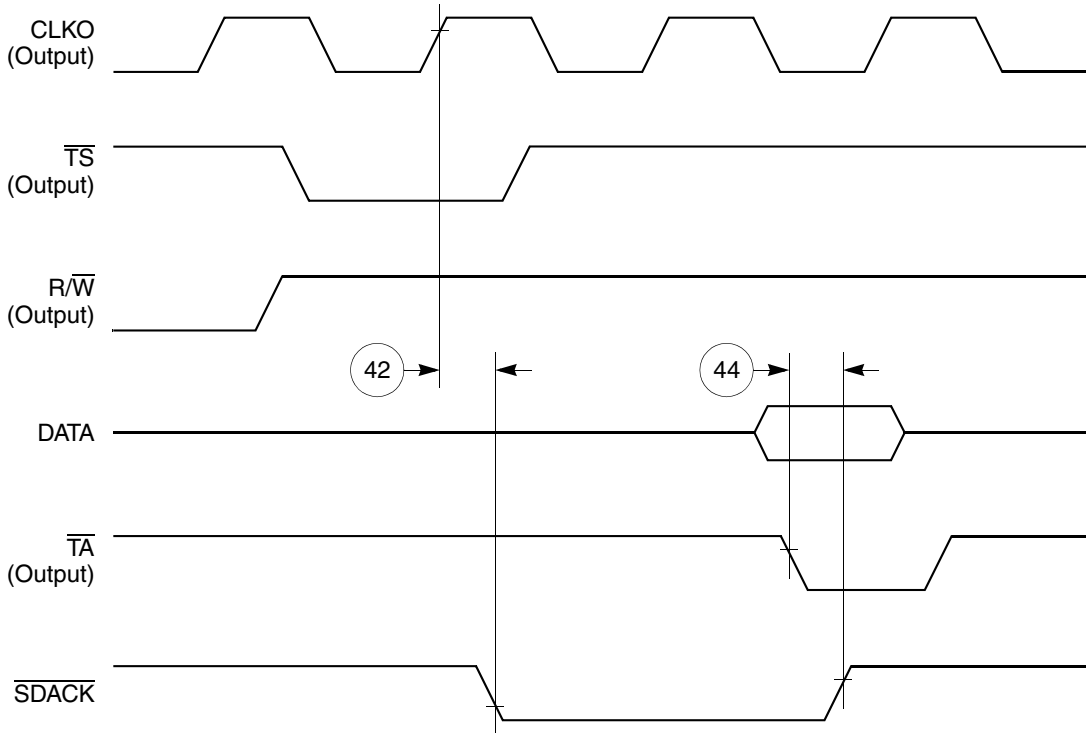

Figure 47. SDACK Timing Diagram—Peripheral Write, Internally-Generated TA

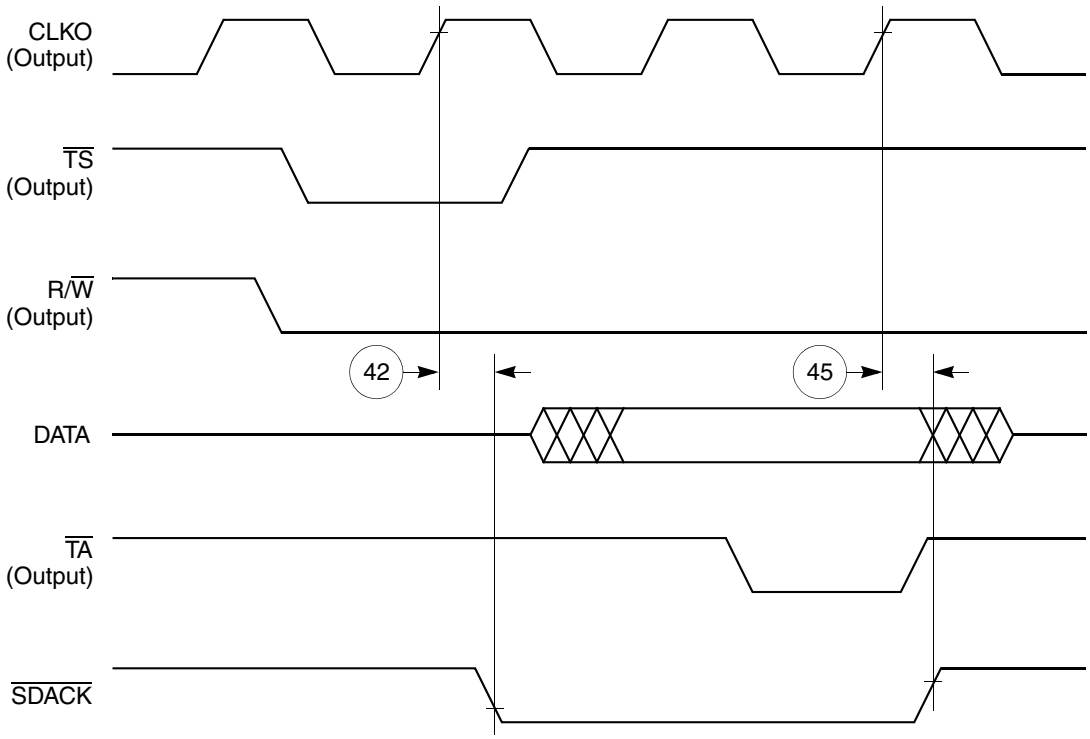

Figure 48. SDACK Timing Diagram—Peripheral Read, Internally-Generated TA

Table 19. SI Timing (continued)

Num	Characteristic	All Frequencies		Unit
		Min	Max	
84	L1CLK edge to L1CLKO valid (DSC = 1)	—	30.00	ns
85	$\overline{\text{L1RQ}}$ valid before falling edge of L1TSYNC[4]	1.00	—	L1TCLK
86	L1GR setup time[2]	42.00	—	ns
87	L1GR hold time	42.00	—	ns
88	L1CLK edge to L1SYNC valid (FSD = 00) CNT = 0000, BYT = 0, DSC = 0)	—	0.00	ns

1 The ratio SYNCCLK/L1RCLK must be greater than 2.5/1.
2 These specs are valid for IDL mode only.
3 Where P = 1/CLKOUT. Thus, for a 25-MHz CLKO1 rate, P = 40 ns.
4 These strobes and TxD on the first bit of the frame become valid after L1CLK edge or L1SYNC, whichever comes later.

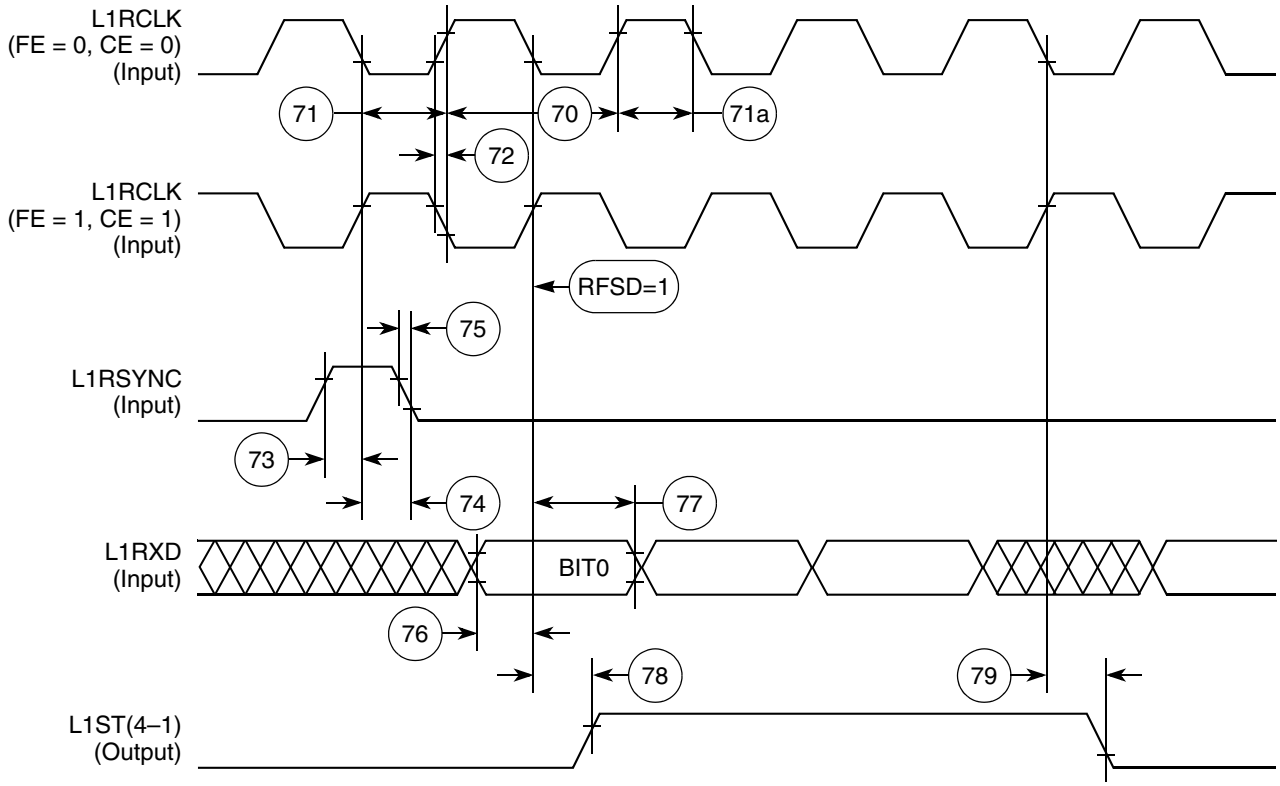

Figure 51. SI Receive Timing Diagram with Normal Clocking (DSC = 0)

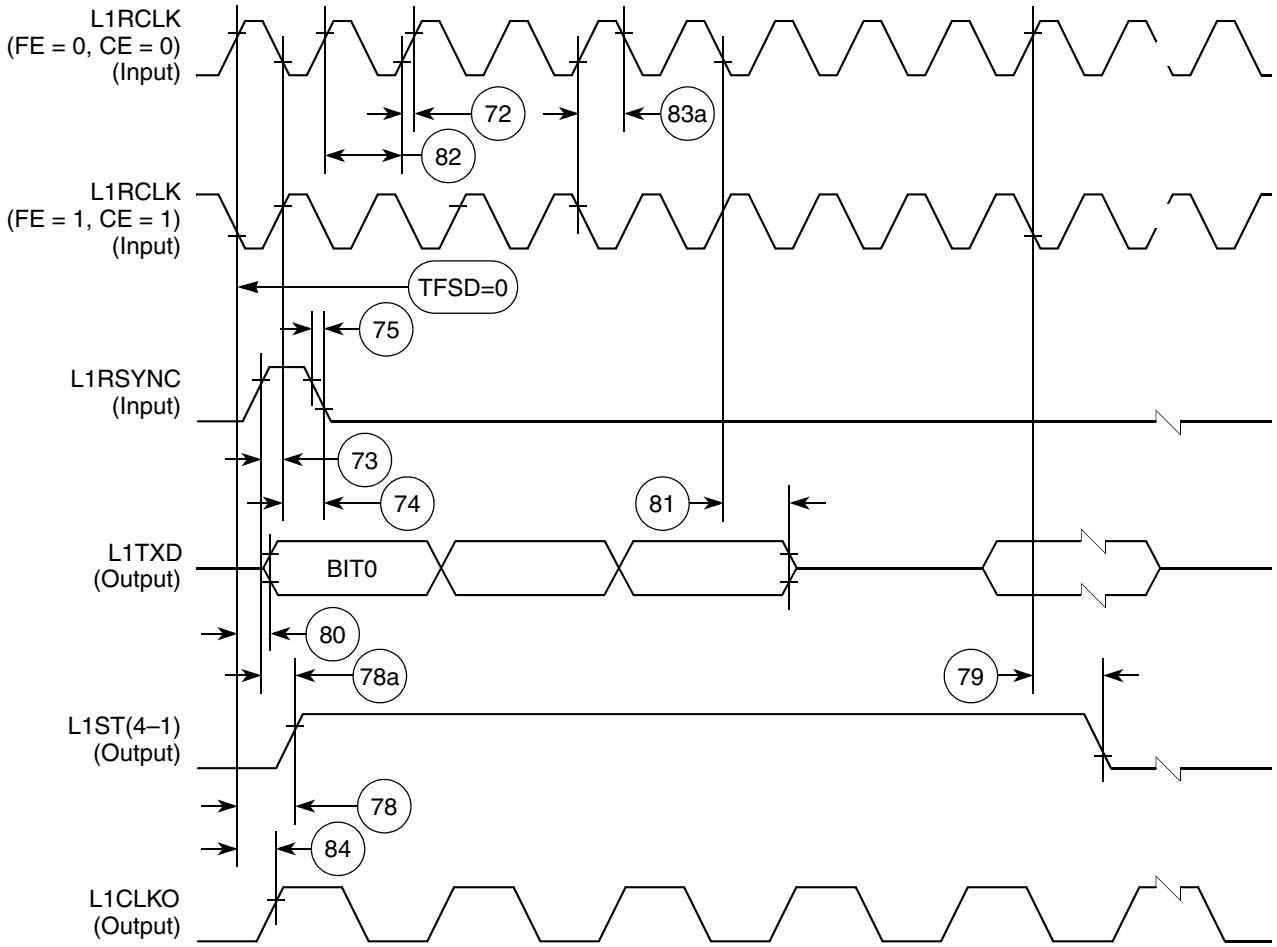

Figure 54. SI Transmit Timing with Double Speed Clocking (DSC = 1)

How to Reach Us:

Home Page:
www.freescale.com

Web Support:
http://www.freescale.com/support

Information in this document is provided solely to enable system and software implementers to use Freescale products. There are no express or implied copyright licenses granted hereunder to design or fabricate any integrated circuits based on the information in this document.

Freescale reserves the right to make changes without further notice to any products herein. Freescale makes no warranty, representation, or guarantee regarding the suitability of its products for any particular purpose, nor does Freescale assume any liability arising out of the application or use of any product or circuit, and specifically disclaims any and all liability, including without limitation consequential or incidental damages. “Typical” parameters that may be provided in Freescale data sheets and/or specifications can and do vary in different applications, and actual performance may vary over time. All operating parameters, including “typicals,” must be validated for each customer application by customer’s technical experts. Freescale does not convey any license under its patent rights nor the rights of others. Freescale sells products pursuant to standard terms and conditions of sale, which can be found at the following address: freescale.com/SalesTermsandConditions.

Freescale, the Freescale logo, CodeWarrior, ColdFire, PowerQUICC, QorIQ, StarCore, and Symphony are trademarks of Freescale Semiconductor, Inc., Reg. U.S. Pat. & Tm. Off. CoreNet, QorIQ Qonverge, QUICC Engine, and VortiQa are trademarks of Freescale Semiconductor, Inc. All other product or service names are the property of their respective owners. The Power Architecture and Power.org word marks and the Power and Power.org logos and related marks are trademarks and service marks licensed by Power.org.
© 2007-2015 Freescale Semiconductor, Inc.

Document Number: MPC860EC
Rev. 10
09/2015