Welcome to E-XFL.COM

What is "Embedded - Microcontrollers"?

"Embedded - Microcontrollers" refer to small, integrated circuits designed to perform specific tasks within larger systems. These microcontrollers are essentially compact computers on a single chip, containing a processor core, memory, and programmable input/output peripherals. They are called "embedded" because they are embedded within electronic devices to control various functions, rather than serving as standalone computers. Microcontrollers are crucial in modern electronics, providing the intelligence and control needed for a wide range of applications.

Applications of "Embedded - Microcontrollers"

Details	
Product Status	Active
Core Processor	R8C
Core Size	16-Bit
Speed	20MHz
Connectivity	I²C, LINbus, SIO, SSU, UART/USART
Peripherals	LCD, POR, PWM, Voltage Detect, WDT
Number of I/O	68
Program Memory Size	48KB (48K x 8)
Program Memory Type	FLASH
EEPROM Size	4K x 8
RAM Size	6K x 8
Voltage - Supply (Vcc/Vdd)	1.8V ~ 5.5V
Data Converters	A/D 16x10b; D/A 2x8b
Oscillator Type	Internal
Operating Temperature	-20°C ~ 85°C (TA)
Mounting Type	Surface Mount
Package / Case	80-LQFP
Supplier Device Package	80-LQFP (14x14)
Purchase URL	https://www.e-xfl.com/product-detail/renesas-electronics-america/r5f2l387mnfa-v1

Table 1.5 Specifications (2)

Item	Function	Specification	
Timer	Timer RA	8 bits × 1 (with 8-bit prescaler) Timer mode (period timer), pulse output mode (output level inverted every period), event counter mode, pulse width measurement mode, pulse period measurement mode	
	Timer RB	8 bits × 1 (with 8-bit prescaler) Timer mode (period timer), programmable waveform generation mode (PWM output), programmable one-shot generation mode, programmable wait one-shot generation mode	
	Timer RC	16 bits × 1 (with 4 capture/compare registers) Timer mode (input capture function, output compare function), PWM mode (output: 3 pins), PWM2 mode (PWM output: 1 pin)	
	Timer RD	16 bits × 2 (with 4 capture/compare registers) Timer mode (input capture function, output compare function), PWM mode (output: 6 pins), reset synchronous PWM mode (three-phase waveform output: 6 pins, sawtooth wave modulation), complementary PWM mode (three-phase waveform output: 6 pins, triangular wave modulation), PWM3 mode (PWM output with fixed period: 2 pins)	
	Timer RE	8 bits × 1 Real-time clock mode (counting of seconds, minutes, hours, days of week), output compare mode	
	Timer RG	16 bits × 1 Phase-counting mode, timer mode (output compare function, input capture function), PWM mode (output: 1 pin)	
Serial Interface	UART0, UART1	Clock synchronous serial I/O/UART × 2 channels	
	UART2	Clock synchronous serial I/O/UART, I^2C mode (I^2C-bus), multiprocessor communication function	
Synchronous Serial Communication Unit (SSU)		1 (shared with I^2C-bus)	
I^2C bus		1 (shared with SSU)	
LIN Module		Hardware LIN: 1 channel (timer RA, UART0 used)	
A/D Converter	R8C/L35M Group	10-bit resolution × 12 channels, including sample and hold function, with sweep mode	
	R8C/L36M Group	10-bit resolution × 12 channels, including sample and hold function, with sweep mode	
	R8C/L38M Group	10-bit resolution × 16 channels, including sample and hold function, with sweep mode	
	R8C/L3AM Group	10-bit resolution × 20 channels, including sample and hold function, with sweep mode	
D/A Converter		8-bit resolution × 2 circuits	
Comparator A		• 2 circuits (sheared with voltage monitor 1 and voltage monitor 2) • External reference voltage input available	
Comparator B		2 circuits	
LCD Drive Control Circuit	R8C/L35M Group	Common output: Max. 4 pins Segment output: Max. 24 pins	Bias: 1/2, 1/3 Duty: static, 1/2, 1/3, 1/4
	R8C/L36M Group	Common output: Max. 8 pins Segment output: Max. 32 pins (1)	Bias: 1/2, 1/3, 1/4 Duty: static, 1/2, 1/3, 1/4, 1/8
	R8C/L38M Group	Common output: Max. 8 pins Segment output: Max. 48 pins (1)	
	R8C/L3AM Group	Common output: Max. 8 pins Segment output: Max. 56 pins (1)	
		Voltage multiplier and dedicated regulator integrated	

Note:
1. This applies when four pins are selected for common output.

1.2 Product Lists

Tables 1.7 to 1.10 list Product List for Each Group. Figures 1.1 to 1.4 show the Correspondence of Part No., with Memory Size and Package for Each Group.

Table 1.7 Product List for R8C/L35M Group **Current of Jun 2011**

Part No.	Internal ROM Capacity		Internal RAM Capacity	Package Type	Remarks
	Program ROM	Data Flash			
R5F2L357MNFP	48 Kbytes	1 Kbyte × 4	6 Kbytes	PLQP0052JA-A	N Version
R5F2L358MNFP	64 Kbytes	1 Kbyte × 4	8 Kbytes	PLQP0052JA-A	
R5F2L35AMNFP	96 Kbytes	1 Kbyte × 4	10 Kbytes	PLQP0052JA-A	
R5F2L35CMNFP	128 Kbytes	1 Kbyte × 4	10 Kbytes	PLQP0052JA-A	
R5F2L357MDFP	48 Kbytes	1 Kbyte × 4	6 Kbytes	PLQP0052JA-A	D Version
R5F2L358MDFP	64 Kbytes	1 Kbyte × 4	8 Kbytes	PLQP0052JA-A	
R5F2L35AMDFP	96 Kbytes	1 Kbyte × 4	10 Kbytes	PLQP0052JA-A	
R5F2L35CMDFP	128 Kbytes	1 Kbyte × 4	10 Kbytes	PLQP0052JA-A	

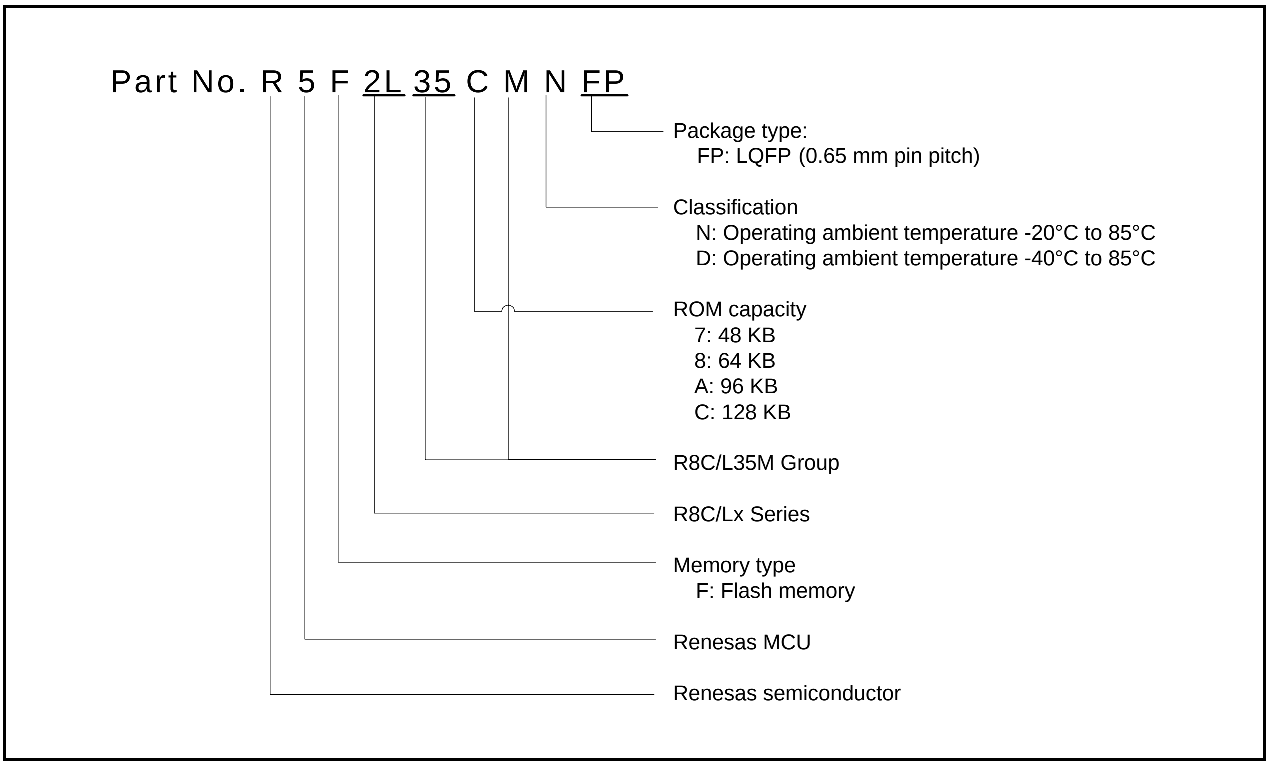
Part No. R 5 F 2L 35 C M N FP
Package type:
FP: LQFP (0.65 mm pin pitch)
Classification
N: Operating ambient temperature -20°C to 85°C
D: Operating ambient temperature -40°C to 85°C
ROM capacity
7: 48 KB
8: 64 KB
A: 96 KB
C: 128 KB
R8C/L35M Group
R8C/Lx Series
Memory type
F: Flash memory
Renesas MCU
Renesas semiconductor

Figure 1.1 Correspondence of Part No., with Memory Size and Package of R8C/L35M Group

Table 1.10 Product List for R8C/L3AM Group **Current of Jun 2011**

Part No.	Internal ROM Capacity		Internal RAM Capacity	Package Type	Remarks
	Program ROM	Data Flash			
R5F2L3A7MNFP	48 Kbytes	1 Kbyte × 4	6 Kbytes	PLQP0100KB-A	N Version
R5F2L3A7MNFA (D)	48 Kbytes	1 Kbyte × 4	6 Kbytes	PRQP0100JD-B	
R5F2L3A8MNFP	64 Kbytes	1 Kbyte × 4	8 Kbytes	PLQP0100KB-A	
R5F2L3A8MNFA (D)	64 Kbytes	1 Kbyte × 4	8 Kbytes	PRQP0100JD-B	
R5F2L3AAMNFP	96 Kbytes	1 Kbyte × 4	10 Kbytes	PLQP0100KB-A	
R5F2L3AAMNFA (D)	96 Kbytes	1 Kbyte × 4	10 Kbytes	PRQP0100JD-B	
R5F2L3ACMNFP	128 Kbytes	1 Kbyte × 4	10 Kbytes	PLQP0100KB-A	
R5F2L3ACMNFA (D)	128 Kbytes	1 Kbyte × 4	10 Kbytes	PRQP0100JD-B	
R5F2L3A7MDFP	48 Kbytes	1 Kbyte × 4	6 Kbytes	PLQP0100KB-A	D Version
R5F2L3A7MDFA (D)	48 Kbytes	1 Kbyte × 4	6 Kbytes	PRQP0100JD-B	
R5F2L3A8MDFP	64 Kbytes	1 Kbyte × 4	8 Kbytes	PLQP0100KB-A	
R5F2L3A8MDFA (D)	64 Kbytes	1 Kbyte × 4	8 Kbytes	PRQP0100JD-B	
R5F2L3AAMDFP	96 Kbytes	1 Kbyte × 4	10 Kbytes	PLQP0100KB-A	
R5F2L3AAMDFA (D)	96 Kbytes	1 Kbyte × 4	10 Kbytes	PRQP0100JD-B	
R5F2L3ACMDFP	128 Kbytes	1 Kbyte × 4	10 Kbytes	PLQP0100KB-A	
R5F2L3ACMDFA (D)	128 Kbytes	1 Kbyte × 4	10 Kbytes	PRQP0100JD-B	

(D): Under development

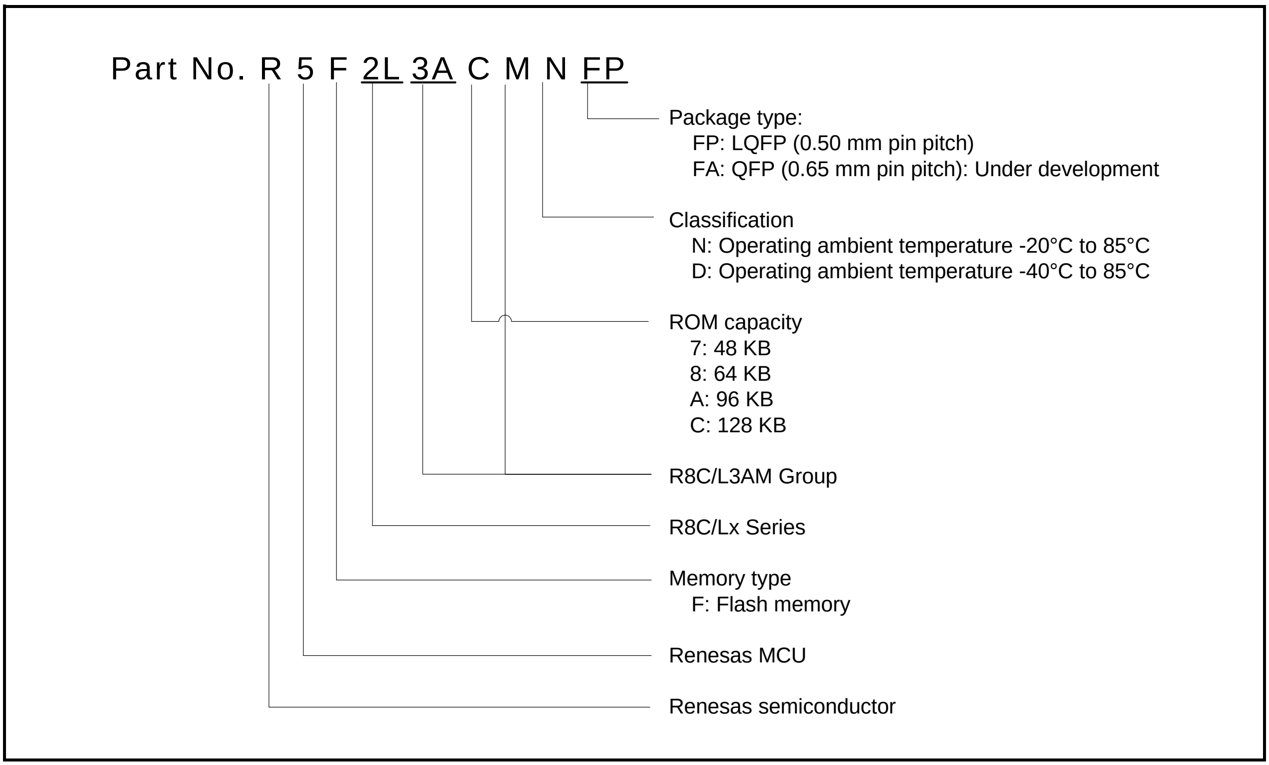
Part No. R 5 F 2L 3A C M N FP
Package type:
FP: LQFP (0.50 mm pin pitch)
FA: QFP (0.65 mm pin pitch): Under development
Classification
N: Operating ambient temperature -20°C to 85°C
D: Operating ambient temperature -40°C to 85°C
ROM capacity
7: 48 KB
8: 64 KB
A: 96 KB
C: 128 KB
R8C/L3AM Group
R8C/Lx Series
Memory type
F: Flash memory
Renesas MCU
Renesas semiconductor

Figure 1.4 Correspondence of Part No., with Memory Size and Package of R8C/L3AM Group

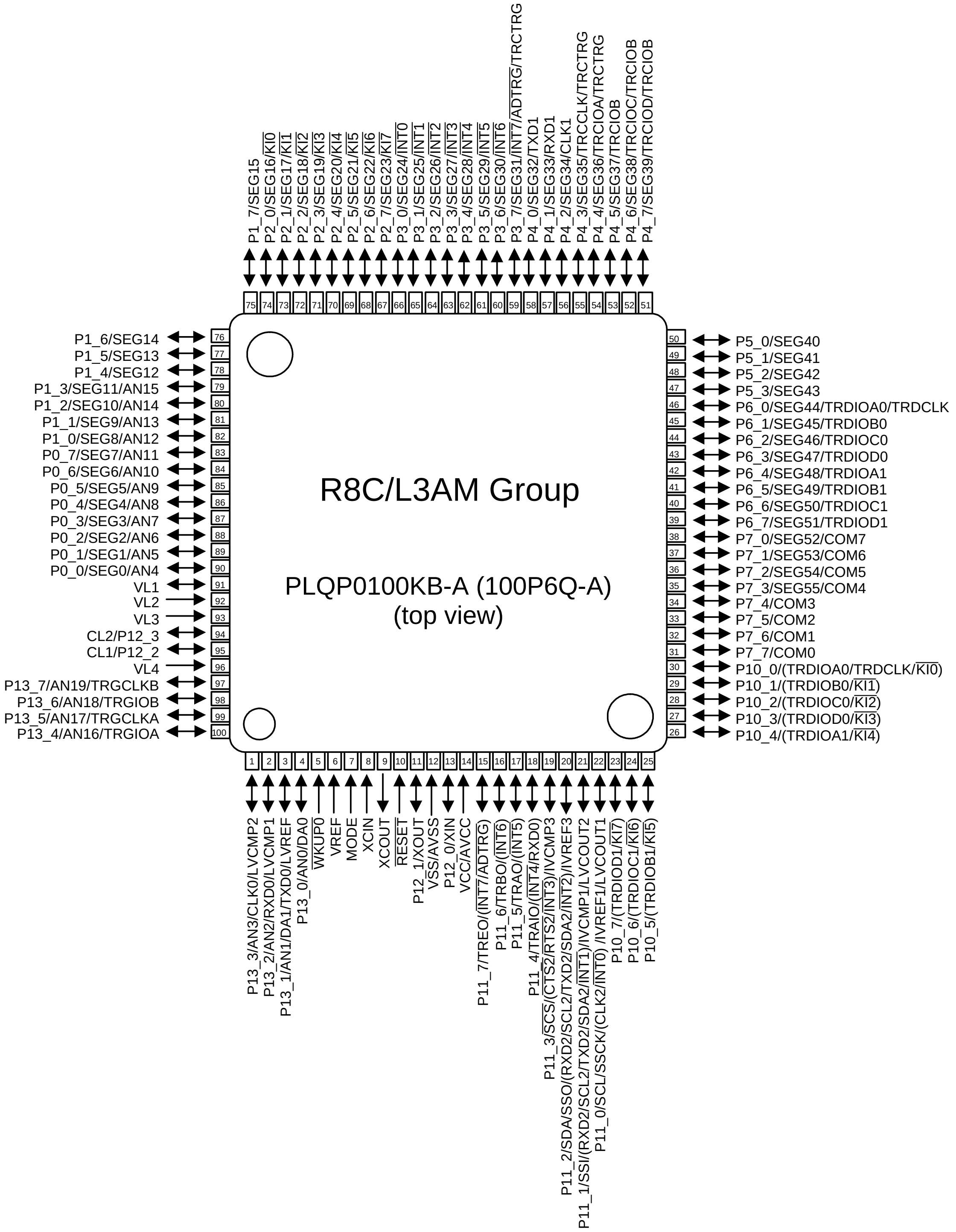
P1_7/SEG15
P2_0/SEG16/KI0
P2_1/SEG17/KI1
P2_2/SEG18/KI2
P2_3/SEG19/KI3
P2_4/SEG20/KI4
P2_5/SEG21/KI5
P2_6/SEG22/KI6
P2_7/SEG23/KI7
P3_0/SEG24/INT0
P3_1/SEG25/INT1
P3_2/SEG26/INT2
P3_3/SEG27/INT3
P3_4/SEG28/INT4
P3_5/SEG29/INT5
P3_6/SEG30/INT6
P3_7/SEG31/INT7/ADTRG/TRCTRG
P4_0/SEG32/TXD1
P4_1/SEG33/RXD1
P4_2/SEG34/CLK1
P4_3/SEG35/TRCCLK/TRCTRG
P4_4/SEG36/TRCIOA/TRCTRG
P4_5/SEG37/TRCIOB
P4_6/SEG38/TRCIOC/TRCIOB
P4_7/SEG39/TRCIOD/TRCIOB
75 74 73 72 71 70 69 68 67 66 65 64 63 62 61 60 59 58 57 56 55 54 53 52 51
P1_6/SEG14 76
P1_5/SEG13 77
P1_4/SEG12 78
P1_3/SEG11/AN15 79
P1_2/SEG10/AN14 80
P1_1/SEG9/AN13 81
P1_0/SEG8/AN12 82
P0_7/SEG7/AN11 83
P0_6/SEG6/AN10 84
P0_5/SEG5/AN9 85
P0_4/SEG4/AN8 86
P0_3/SEG3/AN7 87
P0_2/SEG2/AN6 88
P0_1/SEG1/AN5 89
P0_0/SEG0/AN4 90
VL1 91
VL2 92
VL3 93
CL2/P12_3 94
CL1/P12_2 95
VL4 96
P13_7/AN19/TRGCLKB 97
P13_6/AN18/TRGIOB 98
P13_5/AN17/TRGCLKA 99
P13_4/AN16/TRGIOA 100
R8C/L3AM Group
PLQP0100KB-A (100P6Q-A)
(top view)
50 P5_0/SEG40
49 P5_1/SEG41
48 P5_2/SEG42
47 P5_3/SEG43
46 P6_0/SEG44/TRDIOA0/TRDCLK
45 P6_1/SEG45/TRDIOB0
44 P6_2/SEG46/TRDIOC0
43 P6_3/SEG47/TRDIOD0
42 P6_4/SEG48/TRDIOA1
41 P6_5/SEG49/TRDIOB1
40 P6_6/SEG50/TRDIOC1
39 P6_7/SEG51/TRDIOD1
38 P7_0/SEG52/COM7
37 P7_1/SEG53/COM6
36 P7_2/SEG54/COM5
35 P7_3/SEG55/COM4
34 P7_4/COM3
33 P7_5/COM2
32 P7_6/COM1
31 P7_7/COM0
30 P10_0/(TRDIOA0/TRDCLK/KI0)
29 P10_1/(TRDIOB0/KI1)
28 P10_2/(TRDIOC0/KI2)
27 P10_3/(TRDIOD0/KI3)
26 P10_4/(TRDIOA1/KI4)
1 2 3 4 5 6 7 8 9 10 11 12 13 14 15 16 17 18 19 20 21 22 23 24 25
P13_3/AN3/CLK0/LVCMP2
P13_2/AN2/RXD0/LVCMP1
P13_1/AN1/DA1/TXD0/LVREF
P13_0/AN0/DA0
WKUP0
VREF
MODE
XCIN
XCOUT
RESET
P12_1/XOUT
VSS/AVSS
P12_0/XIN
VCC/AVCC
P11_7/TREO/(INT7/ADTRG)
P11_6/TRBO/(INT6)
P11_5/TRAO/(INT5)
P11_4/TRAIO/(INT4/RXD0)
P11_3/SCS/(CTS2/RTS2/INT3)/IVCMP3
P11_2/SDA/SSO/(RXD2/SCL2/TXD2/SDA2/INT2)/IVREF3
P11_1/SSI/(RXD2/SCL2/TXD2/SDA2/INT1)/IVCMP1/LVCOUT2
P11_0/SCL/SSCK/(CLK2/INT0) /IVREF1/LVCOUT1
P10_7/(TRDIOD1/KI7)
P10_6/(TRDIOC1/KI6)
P10_5/(TRDIOB1/KI5)

Notes:
1. The pin in parentheses can be assigned by a program.
2. Confirm the pin 1 position on the package by referring to the package dimensions.

Figure 1.12 Pin Assignment (Top View) of PLQP0100KB-A Package

Table 1.15 Pin Functions for R8C/L3AM Group (2)

Item	Pin Name	I/O Type	Description
I^{2}C bus	SCL	I/O	Clock I/O pin
	SDA	I/O	Data I/O pin
SSU	SSI	I/O	Data I/O pin
	$\overline{\mathrm{SCS}}$	I/O	Chip-select signal I/O pin
	SSCK	I/O	Clock I/O pin
	SSO	I/O	Data I/O pin
Reference voltage input	VREF	I	Reference voltage input pin for the A/D converter and the D/A converter
A/D converter	AN0 to AN11	I	A/D converter analog input pins
	$\overline{\mathrm{ADTRG}}$	I	A/D external trigger input pin
D/A converter	DA0, DA1	O	D/A converter output pins
Comparator A	LVCMP1, LVCMP2	I	Comparator A analog voltage input pins
	LVREF	I	Comparator A reference voltage input pin
	LVCOUT1, LVCOUT2	O	Comparator A analog output pins
Comparator B	IVCMP1, IVCMP3	I	Comparator B analog voltage input pins
	IVREF1, IVREF3	I	Comparator B reference voltage input pins
Voltage detection circuit	LVCMP2	I	Detection target voltage input pin for voltage detection 2
I/O ports	P0_0 to P0_7, P1_0 to P1_7, P2_0 to P2_7, P3_0 to P3_7, P4_0 to P4_7, P5_0, P5_3, P6_0 to P6_7 P7_0 to P7_7, P10_0 to P10_7, P11_0 to P11_7, P12_0 to P12_3, P13_0 to P13_7	I/O	CMOS I/O ports. Each port has an I/O select direction register, allowing each pin in the port to be directed for input or output individually. Any port set to input can be set to use a pull-up resistor or not by a program. Ports P10_0 to P10_7 and P11_0 to P11_7 can be used as LED drive ports.
Segment output	SEG0 to SEG55	O	LCD segment output pins
Common output	COM0 to COM7	O	LCD common output pins
Voltage multiplier capacity connect pins	CL1, CL2	O	Connect pins for the LCD control voltage multiplier
LCD power supply	VL1	I/O	Apply the voltage: 0 ≤ VL1 ≤ VL2 ≤ VL3 ≤ VL4. VL1 can be used as the reference potential input or output pin when setting the voltage multiplier.
	VL2 to VL4	I	

I: Input O: Output I/O: Input and output

Note:

1. Contact the oscillator manufacturer for oscillation characteristics.

2.1 Data Registers (R0, R1, R2, and R3)

R0 is a 16-bit register for transfer, arithmetic, and logic operations. The same applies to R1 to R3. R0 can be split into high-order bits (R0H) and low-order bits (R0L) to be used separately as 8-bit data registers. R1H and R1L are analogous to R0H and R0L. R2 can be combined with R0 and used as a 32-bit data register (R2R0). R3R1 is analogous to R2R0.

2.2 Address Registers (A0 and A1)

A0 is a 16-bit register for address register indirect addressing and address register relative addressing. It is also used for transfer, arithmetic, and logic operations. A1 is analogous to A0. A1 can be combined with A0 and as a 32-bit address register (A1A0).

2.3 Frame Base Register (FB)

FB is a 16-bit register for FB relative addressing.

2.4 Interrupt Table Register (INTB)

INTB is a 20-bit register that indicates the starting address of an interrupt vector table.

2.5 Program Counter (PC)

PC is 20 bits wide and indicates the address of the next instruction to be executed.

2.6 User Stack Pointer (USP) and Interrupt Stack Pointer (ISP)

The stack pointers (SP), USP and ISP, are each 16 bits wide. The U flag of FLG is used to switch between USP and ISP.

2.7 Static Base Register (SB)

SB is a 16-bit register for SB relative addressing.

2.8 Flag Register (FLG)

FLG is an 11-bit register indicating the CPU state.

2.8.1 Carry Flag (C)

The C flag retains carry, borrow, or shift-out bits that have been generated by the arithmetic and logic unit.

2.8.2 Debug Flag (D)

The D flag is for debugging only. Set it to 0.

2.8.3 Zero Flag (Z)

The Z flag is set to 1 when an arithmetic operation results in 0; otherwise to 0.

2.8.4 Sign Flag (S)

The S flag is set to 1 when an arithmetic operation results in a negative value; otherwise to 0.

2.8.5 Register Bank Select Flag (B)

Register bank 0 is selected when the B flag is 0. Register bank 1 is selected when this flag is set to 1.

2.8.6 Overflow Flag (O)

The O flag is set to 1 when an operation results in an overflow; otherwise to 0.

2.8.7 Interrupt Enable Flag (I)

The I flag enables maskable interrupts.
Interrupts are disabled when the I flag is set to 0, and are enabled when the I flag is set to 1. The I flag is set to 0 when an interrupt request is acknowledged.

2.8.8 Stack Pointer Select Flag (U)

ISP is selected when the U flag is set to 0; USP is selected when the U flag is set to 1.
The U flag is set to 0 when a hardware interrupt request is acknowledged or the INT instruction of software interrupt numbers 0 to 31 is executed.

2.8.9 Processor Interrupt Priority Level (IPL)

IPL is 3 bits wide and assigns processor interrupt priority levels from level 0 to level 7.
If a requested interrupt has higher priority than IPL, the interrupt is enabled.

2.8.10 Reserved Bit

If necessary, set to 0. When read, the content is undefined.

Table 4.3 SFR Information (3) (1)

Address	Register	Symbol	After Reset
0080h	DTC Activation Control Register	DTCTL	00h
0081h			
0082h			
0083h			
0084h			
0085h			
0086h			
0087h			
0088h	DTC Activation Enable Register 0	DTCEN0	00h
0089h	DTC Activation Enable Register 1	DTCEN1	00h
008Ah	DTC Activation Enable Register 2	DTCEN2	00h
008Bh	DTC Activation Enable Register 3	DTCEN3	00h
008Ch	DTC Activation Enable Register 4	DTCEN4	00h
008Dh	DTC Activation Enable Register 5	DTCEN5	00h
008Eh	DTC Activation Enable Register 6	DTCEN6	00h
008Fh			
0090h			
0091h			
0092h			
0093h			
0094h			
0095h			
0096h			
0097h			
0098h			
0099h			
009Ah			
009Bh			
009Ch			
009Dh			
009Eh			
009Fh			
00A0h	UART0 Transmit/Receive Mode Register	U0MR	00h
00A1h	UART0 Bit Rate Register	U0BRG	XXh
00A2h	UART0 Transmit Buffer Register	U0TB	XXh
00A3h			XXh
00A4h	UART0 Transmit/Receive Control Register 0	U0C0	00001000b
00A5h	UART0 Transmit/Receive Control Register 1	U0C1	00000010b
00A6h	UART0 Receive Buffer Register	U0RB	XXh
00A7h			XXh
00A8h	UART2 Transmit/Receive Mode Register	U2MR	00h
00A9h	UART2 Bit Rate Register	U2BRG	XXh
00AAh	UART2 Transmit Buffer Register	U2TB	XXh
00ABh			XXh
00ACh	UART2 Transmit/Receive Control Register 0	U2C0	00001000b
00ADh	UART2 Transmit/Receive Control Register 1	U2C1	00000010b
00AEh	UART2 Receive Buffer Register	U2RB	XXh
00AFh			XXh
00B0h	UART2 Digital Filter Function Select Register	URXDF	00h
00B1h			
00B2h			
00B3h			
00B4h			
00B5h			
00B6h			
00B7h			
00B8h			
00B9h			
00BAh			
00BBh	UART2 Special Mode Register 5	U2SMR5	00h
00BCh	UART2 Special Mode Register 4	U2SMR4	00h
00BDh	UART2 Special Mode Register 3	U2SMR3	000X0X0Xb
00BEh	UART2 Special Mode Register 2	U2SMR2	X0000000b
00BFh	UART2 Special Mode Register	U2SMR	X0000000b

X: Undefined

Note:

1. Blank spaces are reserved. No access is allowed.

Table 4.8 SFR Information (8) (1)

Address	Register	Symbol	After Reset
01C0h	Address Match Interrupt Register 0	RMAD0	XXh
01C1h			XXh
01C2h			0000XXXXb
01C3h	Address Match Interrupt Enable Register 0	AIER0	00h
01C4h	Address Match Interrupt Register 1	RMAD1	XXh
01C5h			XXh
01C6h			0000XXXXb
01C7h	Address Match Interrupt Enable Register 1	AIER1	00h
01C8h			
01C9h			
01CAh			
01CBh			
01CCh			
01CDh			
01CEh			
01CFh			
01D0h			
01D1h			
01D2h			
01D3h			
01D4h			
01D5h			
01D6h			
01D7h			
01D8h			
01D9h			
01DAh			
01DBh			
01DCh			
01DDh			
01DEh			
01DFh			
01E0h	Port P0 Pull-Up Control Register	P0PUR	00h
01E1h	Port P1 Pull-Up Control Register	P1PUR	00h
01E2h	Port P2 Pull-Up Control Register	P2PUR	00h
01E3h	Port P3 Pull-Up Control Register	P3PUR	00h
01E4h	Port P4 Pull-Up Control Register	P4PUR	00h
01E5h	Port P5 Pull-Up Control Register	P5PUR	00h
01E6h	Port P6 Pull-Up Control Register	P6PUR	00h
01E7h	Port P7 Pull-Up Control Register	P7PUR	00h
01E8h			
01E9h			
01EAh	Port 10 Pull-Up Control Register	P10PUR	00h
01EBh	Port 11 Pull-Up Control Register	P11PUR	00h
01ECh	Port 12 Pull-Up Control Register	P12PUR	00h
01EDh	Port 13 Pull-Up Control Register	P13PUR	00h
01EEh			
01EFh			
01F0h	Port P10 Drive Capacity Control Register	P10DRR	00h
01F1h	Port P11 Drive Capacity Control Register	P11DRR	00h
01F2h			
01F3h			
01F4h			
01F5h	Input Threshold Control Register 0	VLT0	00h
01F6h	Input Threshold Control Register 1	VLT1	00h
01F7h	Input Threshold Control Register 2	VLT2	00h
01F8h	Comparator B Control Register 0	INTCMP	00h
01F9h			
01FAh	External Input Enable Register 0	INTEN	00h
01FBh	External Input Enable Register 1	INTEN1	00h
01FCh	INT Input Filter Select Register 0	INTF	00h
01FDh	INT Input Filter Select Register 1	INTF1	00h
01FEh	Key Input Enable Register 0	KIEN	00h
01FFh	Key Input Enable Register 1	KIEN1	00h

X: Undefined
Note:
1. Blank spaces are reserved. No access is allowed.

Table 4.11 SFR Information (11) (1)

Address	Register	Symbol	After Reset
0280h	LCD Display Control Data Register	LRA16H	XXh
0281h		LRA17H	XXh
0282h		LRA18H	XXh
0283h		LRA19H	XXh
0284h		LRA20H	XXh
0285h		LRA21H	XXh
0286h		LRA22H	XXh
0287h		LRA23H	XXh
0288h		LRA24H	XXh
0289h		LRA25H	XXh
028Ah		LRA26H	XXh
028Bh		LRA27H	XXh
028Ch		LRA28H	XXh
028Dh		LRA29H	XXh
028Eh		LRA30H	XXh
028Fh		LRA31H	XXh
0290h		LRA32H	XXh
0291h		LRA33H	XXh
0292h		LRA34H	XXh
0293h		LRA35H	XXh
0294h		LRA36H	XXh
0295h		LRA37H	XXh
0296h		LRA38H	XXh
0297h		LRA39H	XXh
0298h		LRA40H	XXh
0299h		LRA41H	XXh
029Ah		LRA42H	XXh
029Bh		LRA43H	XXh
029Ch		LRA44H	XXh
029Dh		LRA45H	XXh
029Eh		LRA46H	XXh
029Fh		LRA47H	XXh
02A0h		LRA48H	XXh
02A1h		LRA49H	XXh
02A2h		LRA50H	XXh
02A3h		LRA51H	XXh
02A4h		LRA52H	XXh
02A5h		LRA53H	XXh
02A6h		LRA54H	XXh
02A7h		LRA55H	XXh
02A8h			
02A9h			
02AAh			
02ABh			
02ACh			
02ADh			
02AEh			
02AFh			
02B0h			
02B1h			
02B2h			
02B3h			
02B4h			
02B5h			
02B6h			
02B7h			
02B8h			
02B9h			
02BAh			
02BBh			
02BCh			
02BDh			
02BEh			
02BFh			

X: Undefined

Note:

1. Blank spaces are reserved. No access is allowed.

Table 4.12 SFR Information (12) (1)

Address	Register	Symbol	After Reset
02C0h			
02C1h			
02C2h			
02C3h			
02C4h			
02C5h			
02C6h			
02C7h			
02C8h			
02C9h			
02CAh			
02CBh			
02CCh			
02CDh			
02CEh			
02CFh			
02D0h			
02D1h			
02D2h			
02D3h			
02D4h			
02D5h			
02D6h			
02D7h			
02D8h			
02D9h			
02DAh			
02DBh			
02DCh			
02DDh			
02DEh			
02DFh			
02E0h			
02E1h			
02E2h			
02E3h			
02E4h			
02E5h			
02E6h			
02E7h			
02E8h			
02E9h			
02EAh			
02EBh			
02ECh			
02EDh			
02EEh			
02EFh			
02F0h			
02F1h			
02F2h			
02F3h			
02F4h			
02F5h			
02F6h			
02F7h			
02F8h			
02F9h			
02FAh			
02FBh			
02FCh			
02FDh			
02FEh			
02FFh			

X: Undefined

Note:

1. Blank spaces are reserved. No access is allowed.

Table 5.8 Flash Memory (Data flash Block A to Block D) Characteristics (VCC = 2.7 to 5.5 V and Topr = –20 to 85°C (N version) / –40 to 85°C (D version), unless otherwise specified.)

Symbol	Parameter	Conditions	Standard			Unit
			Min.	Typ.	Max.	
—	Program/erase endurance (1)		10,000 (2)	—	—	times
—	Byte program time (program/erase endurance ≤ 1,000 times)		—	160	1500	µs
—	Byte program time (program/erase endurance > 1,000 times)		—	300	1500	µs
—	Block erase time (program/erase endurance ≤ 1,000 times)		—	0.2	1	s
—	Block erase time (program/erase endurance > 1,000 times)		—	0.3	1	s
$t_{d(SR-SUS)}$	Time delay from suspend request until suspend		—	—	5 + CPU clock × 3 cycles	ms
—	Interval from erase start/restart until following suspend request		0	—	—	ms
—	Time from suspend until erase restart		—	—	30+CPU clock × 1 cycle	µs
$t_{d(CMDRST-READY)}$	Time from when command is forcibly terminated until reading is enabled		—	—	30+CPU clock × 1 cycle	µs
—	Program, erase voltage		2.7	—	5.5	V
—	Read voltage		1.8	—	5.5	V
—	Program, erase temperature		–20 (6)	—	85	°C
—	Data hold time (7)	Ambient temperature = 55 °C	20	—	—	year

Notes:

1. Definition of programming/erasure endurance
The programming and erasure endurance is defined on a per-block basis.
If the programming and erasure endurance is n (n = 10,000), each block can be erased n times. For example, if 1,024 1-byte writes are performed to different addresses in block A, a 1 Kbyte block, and then the block is erased, the programming/erasure endurance still stands at one.
However, the same address must not be programmed more than once per erase operation (overwriting prohibited).
2. Endurance to guarantee all electrical characteristics after program and erase. (1 to Min. value can be guaranteed).
3. In a system that executes multiple programming operations, the actual erasure count can be reduced by writing to sequential addresses in turn so that as much of the block as possible is used up before performing an erase operation. For example, when programming groups of 16 bytes, the effective number of rewrites can be minimized by programming up to 128 groups before erasing them all in one operation. In addition, averaging the erasure endurance between blocks A to D can further reduce the actual erasure endurance. It is also advisable to retain data on the erasure endurance of each block and limit the number of erase operations to a certain number.
4. If an error occurs during block erase, attempt to execute the clear status register command, then execute the block erase command at least three times until the erase error does not occur.
5. Customers desiring program/erase failure rate information should contact their Renesas technical support representative.
6. –40°C for D version.
7. The data hold time includes time that the power supply is off or the clock is not supplied.

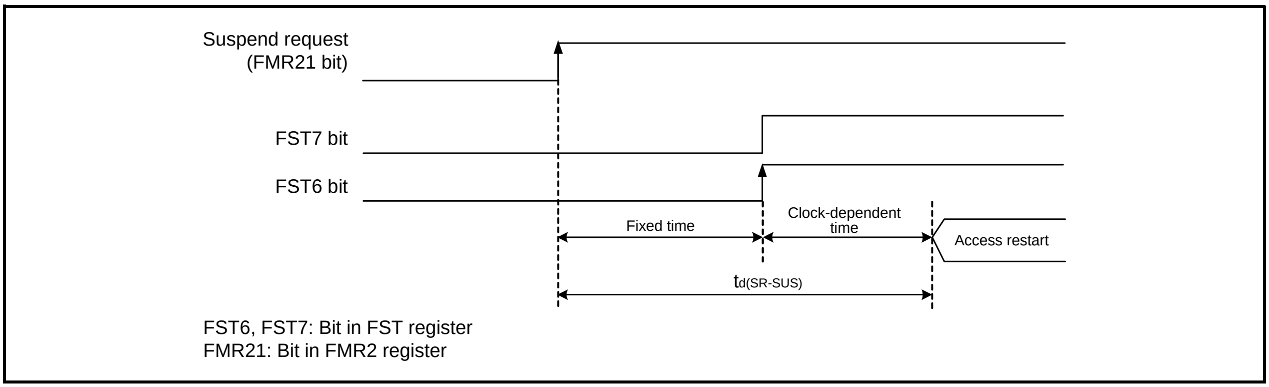

FST6, FST7: Bit in FST register
FMR21: Bit in FMR2 register

Figure 5.2 Time delay until Suspend

Table 5.11 Voltage Detection 2 Circuit Characteristics (VCC = 1.8 to 5.5 V and Topr = –20 to 85°C (N version) / –40 to 85°C (D version), unless otherwise specified.)

Symbol	Parameter	Condition	Standard			Unit
			Min.	Typ.	Max.	
V_{det2}	Voltage detection level Vdet2_0 (1)	At the falling of V_{CC}	3.70	4.00	4.30	V
	Voltage detection level Vdet2_EXT (1)	At the falling of LVCMP2	1.24	1.34	1.44	V
—	Hysteresis width at the rising of Vcc in voltage detection 2 circuit		—	0.10	—	V
—	Voltage detection 2 circuit response time (2)	At the falling of Vcc from 5 V to (Vdet2_0 – 0.1) V	—	20	150	µs
—	Voltage detection circuit self power consumption	VCA27 = 1, V_{CC} = 5.0 V	—	1.7	—	µA
$t_{d(E-A)}$	Waiting time until voltage detection circuit operation starts (3)		—	—	100	µs

Notes:
1. The voltage detection level varies with detection targets. Select the level with the VCA24 bit in the VCA2 register.
2. Time until the voltage monitor 2 interrupt request is generated after the voltage passes V_{det2}.
3. Necessary time until the voltage detection circuit operates after setting to 1 again after setting the VCA27 bit in the VCA2 register to 0.

Table 5.12 Power-on Reset Circuit Characteristics (1) (Topr = –20 to 85°C (N version) / –40 to 85°C (D version), unless otherwise specified.)

Symbol	Parameter	Condition	Standard			Unit
			Min.	Typ.	Max.	
t_{rth}	External power V_{CC} rise gradient		0	—	50000	mV/msec

Note:
1. To use the power-on reset function, enable voltage monitor 0 reset by setting the LVDAS bit in the OFS register to 0.

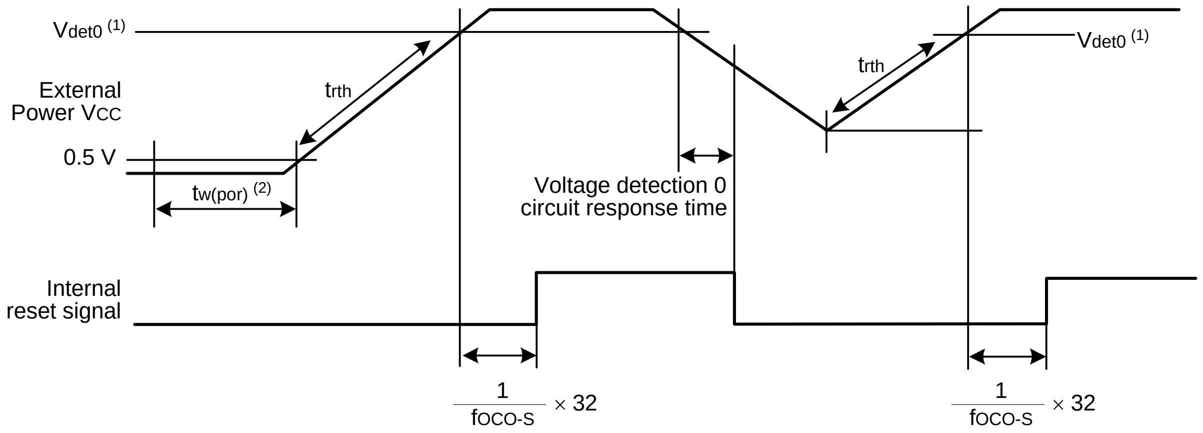

Notes:
1. V_{det0} indicates the voltage detection level of the voltage detection 0 circuit. Refer to **6. Voltage Detection Circuit** in the User's Manual: Hardware for details.
2. $t_{w(por)}$ indicates the duration the external power V_{CC} must be held below the valid voltage (0.5 V) to enable a power-on reset. When turning on the power after it falls with voltage monitor 0 reset disabled, maintain $t_{w(por)}$ for 1 ms or more.

Figure 5.3 Power-on Reset Circuit Characteristics

Table 5.16 LCD Drive Control Circuit Characteristics (VCC = 1.8 to 5.5 V, VSS = 0 V, and Topr = –20 to 85°C (N version) / –40 to 85°C (D version), unless otherwise specified.)

Symbol	Parameter	Condition	Standard			Unit
			Min.	Typ.	Max.	
VLCD	LCD power supply voltage	VLCD = VL4	2.2	—	5.5	V
VL3	VL3 voltage		VL2	—	VL4	V
VL2	VL2 voltage	R8C/L35M	VL1	—	VL4	V
		R8C/L36M, R8C/L38M, R8C/L3AM	VL1	—	VL3	V
VL1	VL1 voltage		1	—	VL2 (3)	V
—	VL1 internally-generated voltage accuracy (1)		Setting voltage –0.2	Setting voltage	Setting voltage +0.2	V
f(FR)	Frame frequency		50	—	180	Hz
ILCD	LCD drive control circuit current		—	(Note 2)	—	µA

Notes:
1. The voltage is selected with bits LVLS0 to LVLS3 in the LCR1 register.
2. Refer to **Table 5.19 DC Characteristics (2)**, **Table 5.21 DC Characteristics (4)**, and **Table 5.23 DC Characteristics (6)**.
3. The VL1 voltage should be VCC or below.

Table 5.17 Power-Off Mode Characteristics (VCC = 2.2 to 5.5 V, VSS = 0 V, and Topr = –20 to 85°C (N version) / –40 to 85°C (D version), unless otherwise specified.)

Symbol	Parameter	Condition	Standard			Unit
			Min.	Typ.	Max.	
—	Power-off mode operating supply voltage		2.2	—	5.5	V

Table 5.21 DC Characteristics (4) [2.7 V ≤ Vcc < 4.0 V]
(Topr = −20 to 85°C (N version) / −40 to 85°C (D version), unless otherwise specified.)

Symbol	Parameter	Condition									Standard			Unit
			Oscillation Circuit		On-Chip Oscillator		CPU Clock	Low-Power-Consumption Setting	Other		Min.	Typ. (3)	Max.	
			XIN (2)	XCIN	High-Speed (fOCO-F)	Low-Speed								
ICC	Power supply current (1)	High-speed clock mode	20 MHz	Off	Off	125 kHz	No division	—			—	7.0	14.5	mA
			10 MHz	Off	Off	125 kHz	No division	—			—	3.6	10	mA
			20 MHz	Off	Off	125 kHz	Divide-by-8	—			—	3.0	—	mA
			10 MHz	Off	Off	125 kHz	Divide-by-8	—			—	1.5	—	mA
		High-speed on-chip oscillator mode	Off	Off	20 MHz	125 kHz	No division	—			—	7.0	14.5	mA
			Off	Off	20 MHz	125 kHz	Divide-by-8	—			—	3.0	—	mA
			Off	Off	10 MHz	125 kHz	No division	—			—	4.0	—	mA
			Off	Off	10 MHz	125 kHz	Divide-by-8	—			—	1.7	—	mA
			Off	Off	4 MHz	125 kHz	Divide-by-16	MSTIIC = 1 MSTTRD = 1 MSTTRC = 1 MSTTRG = 1			—	1	—	mA
		Low-speed on-chip oscillator mode	Off	Off	Off	125 kHz	Divide-by-8	FMR27 = 1 VCA20 = 0			—	85	390	µA
		Low-speed clock mode	Off	32 kHz	Off	Off	No division	FMR27 = 1 VCA20 = 0			—	90	400	µA
			Off	32 kHz	Off	Off	No division	FMSTP = 1 VCA20 = 0	Flash memory off Program operation on RAM		—	50	—	µA
		Wait mode	Off	Off	Off	125 kHz	—	VCA27 = 0 VCA26 = 0 VCA25 = 0 VCA20 = 1	While a WAIT instruction is executed Peripheral clock operation		—	15	90	µA
			Off	Off	Off	125 kHz	—	VCA27 = 0 VCA26 = 0 VCA25 = 0 VCA20 = 1 CM02 = 1 CM01 = 1	While a WAIT instruction is executed Peripheral clock off		—	5	80	µA
			Off	32 kHz	Off	Off	—	VCA27 = 0 VCA26 = 0 VCA25 = 0 VCA20 = 1 CM02 = 1 CM01 = 0	While a WAIT instruction is executed Peripheral clock off Timer RE operation in real-time clock mode	LCD drive control circuit (4) When external division resistors are used	—	5	—	µA
										LCD drive control circuit (5) When the internal voltage multiplier is used	—	11	—	µA
			Off	32 kHz	Off	Off	—	VCA27 = 0 VCA26 = 0 VCA25 = 0 VCA20 = 1 CM02 = 1 CM01 = 1	While a WAIT instruction is executed Peripheral clock off Timer RE operation in real-time clock mode		—	3.5	—	µA
		Stop mode	Off	Off	Off	Off	—	VCA27 = 0 VCA26 = 0 VCA25 = 0 CM10 = 1	Topr = 25°C Peripheral clock off		—	2	5.0	µA
			Off	Off	Off	Off	—	VCA27 = 0 VCA26 = 0 VCA25 = 0 CM10 = 1	Topr = 85°C Peripheral clock off		—	13.0	—	µA
		Power-off mode	Off	Off	Off	Off	—	—	Power-off 0 Topr = 25°C		—	0.02	0.2	µA
			Off	Off	Off	Off	—	—	Power-off 0 Topr = 85°C		—	0.3	—	µA
			Off	32 kHz	Off	Off	—	—	Power-off 1 Topr = 25°C		—	1.4	2.8	µA
			Off	32 kHz	Off	Off	—	—	Power-off 1 Topr = 85°C		—	1.8	—	µA

Notes:
1. Vcc = 2.7 V to 4.0 V, single chip mode, output pins are open, and other pins are Vss.
2. XIN is set to square wave input.
3. Vcc = 3.0 V
4. VLCD = Vcc, external division resistors are used for VL4 to VL1, 1/3 bias, 1/4 duty, f(FR) = 64 Hz, SEG0 to SEG55 are selected, and segment and common output pins are open. The standard value does not include the current that flows through external division resistors.
5. The internal voltage multiplier is used, bits LVLS3 to LVLS0 in the LCR1 register = 1011b, 1/3 bias, 1/4 duty, f(FR) = 64 Hz, SEG0 to SEG55 are selected, and segment and common output pins are open.

Table 5.28 Timing Requirements of Serial Interface (VCC = 1.8 to 5.5 V, VSS = 0 V, and Topr = –20 to 85°C (N version) / –40 to 85°C (D version), unless otherwise specified.)

Symbol	Parameter	Standard						Unit
		VCC = 2.2V, Topr = 25°C		VCC = 3V, Topr = 25°C		VCC = 5V, Topr = 25°C		
		Min.	Max.	Min.	Max.	Min.	Max.	
$t_{c(CK)}$	CLKi input cycle time	800	—	300	—	200	—	ns
$t_{W(CKH)}$	CLKi input “H” width	400	—	150	—	100	—	ns
$t_{W(CKL)}$	CLKi input “L” width	400	—	150	—	100	—	ns
$t_{d(C-Q)}$	TXDi output delay time	—	200	—	80	—	50	ns
$t_{h(C-Q)}$	TXDi hold time	0	—	0	—	0	—	ns
$t_{su(D-C)}$	RXDi input setup time	150	—	70	—	50	—	ns
$t_{h(C-D)}$	RXDi input hold time	90	—	90	—	90	—	ns

i = 0 to 2

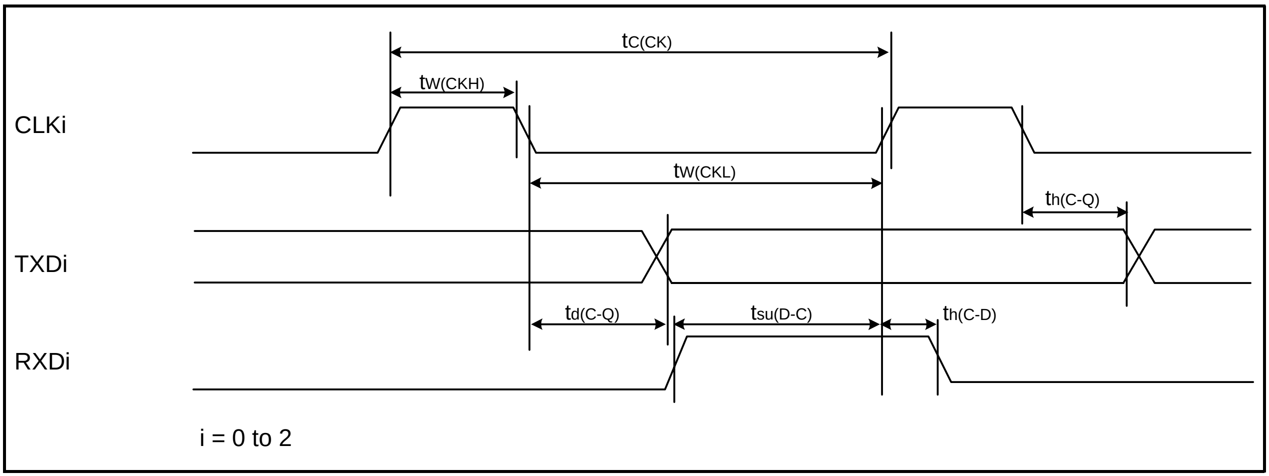

Figure 5.10 Input and Output Timing of Serial Interface

Table 5.29 Timing Requirements of External Interrupt $\overline{\text{INTi}}$ (i = 0 to 7) and Key Input Interrupt $\overline{\text{KIi}}$ (i = 0 to 7) (VCC = 1.8 to 5.5 V, VSS = 0 V, and Topr = –20 to 85°C (N version) / –40 to 85°C (D version), unless otherwise specified.)

Symbol	Parameter	Standard						Unit
		VCC = 2.2V, Topr = 25°C		VCC = 3V, Topr = 25°C		VCC = 5V, Topr = 25°C		
		Min.	Max.	Min.	Max.	Min.	Max.	
$t_{W(INH)}$	$\overline{\text{INTi}}$ input “H” width, $\overline{\text{KIi}}$ input “H” width	1000 (1)	—	380 (1)	—	250 (1)	—	ns
$t_{W(INL)}$	$\overline{\text{INTi}}$ input “L” width, $\overline{\text{KIi}}$ input “L” width	1000 (2)	—	380 (2)	—	250 (2)	—	ns

Notes:

1. When selecting the digital filter by the $\overline{\text{INTi}}$ input filter select bit, use an $\overline{\text{INTi}}$ input HIGH width of either (1/digital filter clock frequency × 3) or the minimum value of standard, whichever is greater.
2. When selecting the digital filter by the $\overline{\text{INTi}}$ input filter select bit, use an $\overline{\text{INTi}}$ input LOW width of either (1/digital filter clock frequency × 3) or the minimum value of standard, whichever is greater.

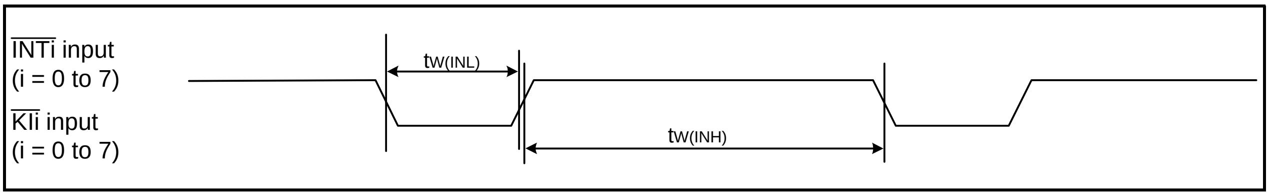

Figure 5.11 Input Timing of External Interrupt $\overline{\text{INTi}}$ and Key Input Interrupt $\overline{\text{KIi}}$

JEITA Package Code	RENESAS Code	Previous Code	MASS[Typ.]
P-LQFP80-12x12-0.50	PLQP0080KB-A	80P6Q-A	0.5g

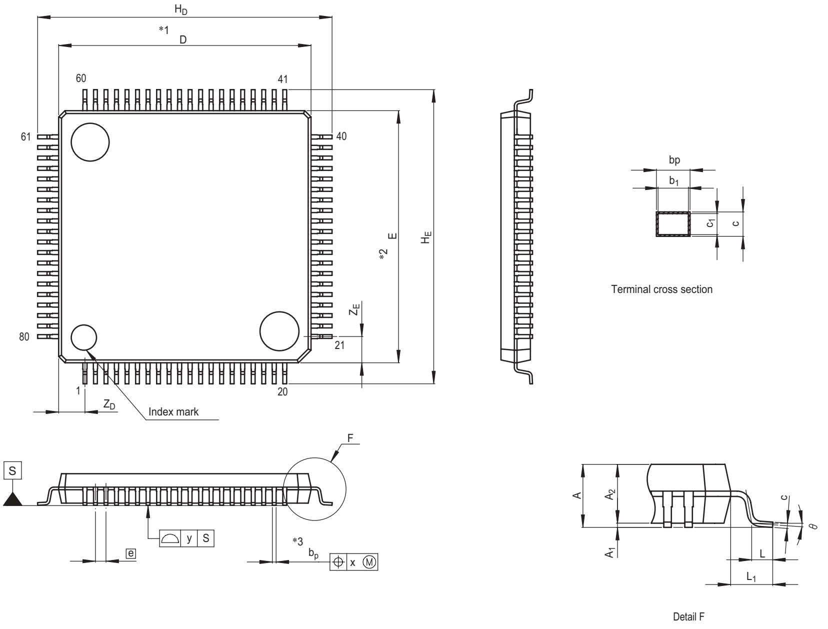
H_D
*1
D
60
41
61
40
80
21
1
20
Z_D
Index mark
*2
E
H_E
Z_E
F
S
y S
e
*3
b_p
x M
bp
b_1
c_1
c
Terminal cross section
A
A_2
A_1
c
θ
L
L_1
Detail F

NOTE)
1. DIMENSIONS "*1" AND "*2" DO NOT INCLUDE MOLD FLASH.
2. DIMENSION "*3" DOES NOT INCLUDE TRIM OFFSET.

Reference Symbol	Dimension in Millimeters		
	Min	Nom	Max
D	11.9	12.0	12.1
E	11.9	12.0	12.1
A_2	—	1.4	—
H_D	13.8	14.0	14.2
H_E	13.8	14.0	14.2
A	—	—	1.7
A_1	0	0.1	0.2
b_p	0.15	0.20	0.25
b_1	—	0.18	—
c	0.09	0.145	0.20
c_1	—	0.125	—
θ	0°	—	10°
$\boxed{e}$	—	0.5	—
x	—	—	0.08
y	—	—	0.08
Z_D	—	1.25	—
Z_E	—	1.25	—
L	0.3	0.5	0.7
L_1	—	1.0	—

JEITA Package Code	RENESAS Code	Previous Code	MASS[Typ.]
P-LQFP80-14x14-0.65	PLQP0080JA-A	FP-80W / FP-80WV	0.6g

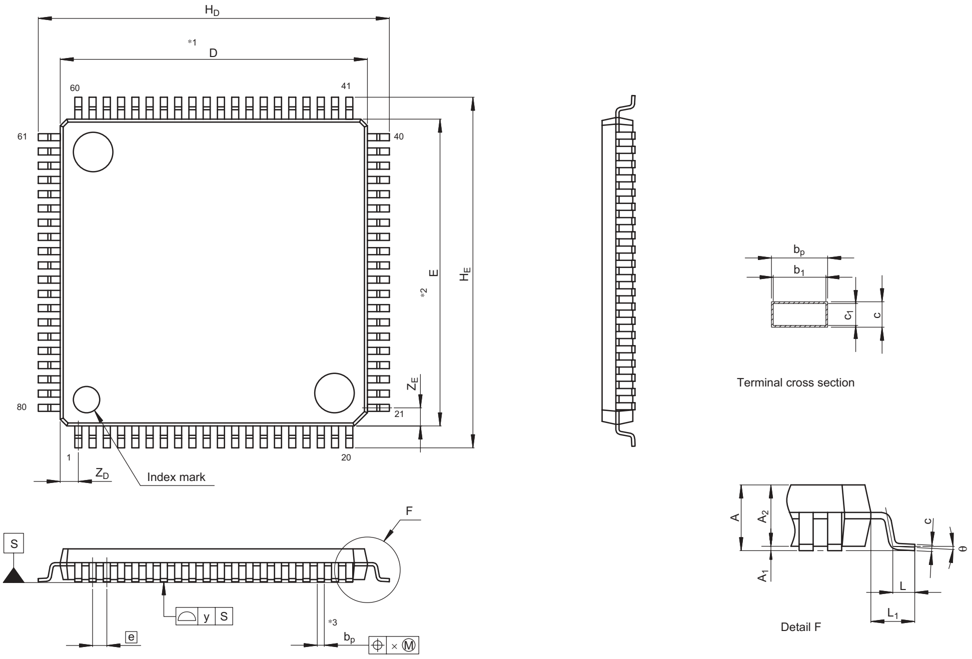
H_D
*1
D
60
41
61
40
80
21
1
20
Z_D
Index mark
*2
E
H_E
Z_E
F
S
y S
e
*3
b_p
x M
b_p
b_1
c_1
c
Terminal cross section
A
A_2
A_1
c
θ
L
L_1
Detail F

NOTE)
1. DIMENSIONS "*1" AND "*2" DO NOT INCLUDE MOLD FLASH.
2. DIMENSION "*3" DOES NOT INCLUDE TRIM OFFSET.

Reference Symbol	Dimension in Millimeters		
	Min	Nom	Max
D	13.9	14.0	14.1
E	13.9	14.0	14.1
A_2	—	1.4	—
H_D	15.8	16.0	16.2
H_E	15.8	16.0	16.2
A	—	—	1.7
A_1	0.05	0.1	0.15
b_p	0.27	0.32	0.37
b_1	—	0.30	—
c	0.09	0.145	0.20
c_1	—	0.125	—
θ	0°	—	8°
$\boxed{e}$	—	0.65	—
x	—	—	0.13
y	—	—	0.10
Z_D	—	0.825	—
Z_E	—	0.825	—
L	0.35	0.5	0.65
L_1	—	1.0	—

JEITA Package Code	RENESAS Code	Previous Code	MASS[Typ.]
P-LQFP100-14x14-0.50	PLQP0100KB-A	100P6Q-A / FP-100U / FP-100UV	0.6g

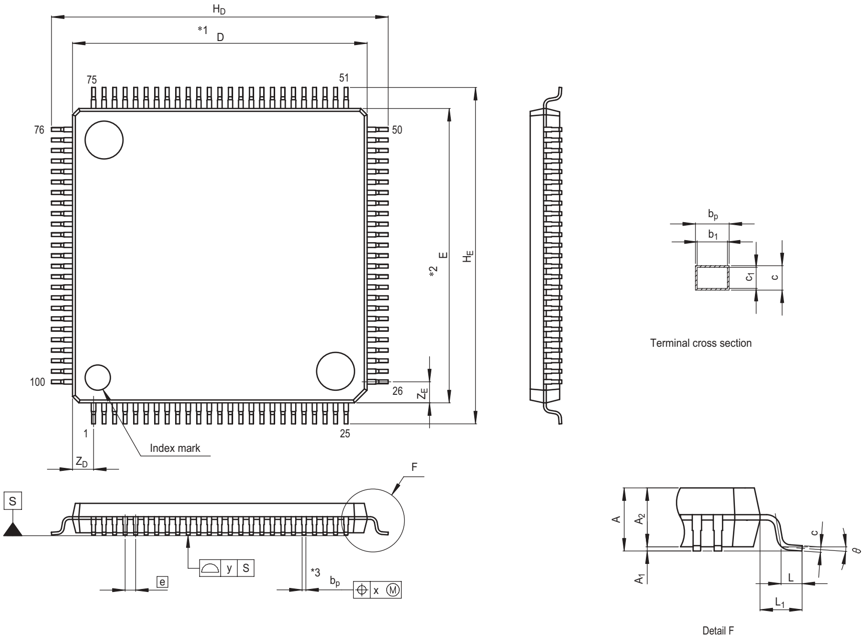
HD
*1 D
75
51
76
50
100
26
1
25
*2 E
HE
ZE
ZD
Index mark
F
S
e
y S
*3
bp
x M
bp
b1
c1
c
Terminal cross section
A
A2
A1
c
θ
L
L1
Detail F

NOTE)
1. DIMENSIONS "*1" AND "*2" DO NOT INCLUDE MOLD FLASH.
2. DIMENSION "*3" DOES NOT INCLUDE TRIM OFFSET.

Reference Symbol	Dimension in Millimeters		
	Min	Nom	Max
D	13.9	14.0	14.1
E	13.9	14.0	14.1
A_2	—	1.4	—
H_D	15.8	16.0	16.2
H_E	15.8	16.0	16.2
A	—	—	1.7
A_1	0.05	0.1	0.15
b_p	0.15	0.20	0.25
b_1	—	0.18	—
c	0.09	0.145	0.20
c_1	—	0.125	—
θ	0°	—	8°
$\boxed{e}$	—	0.5	—
x	—	—	0.08
y	—	—	0.08
Z_D	—	1.0	—
Z_E	—	1.0	—
L	0.35	0.5	0.65
L_1	—	1.0	—

JEITA Package Code	RENESAS Code	Previous Code	MASS[Typ.]
P-QFP100-14x20-0.65	PRQP0100JD-B	100P6F-A	1.8g

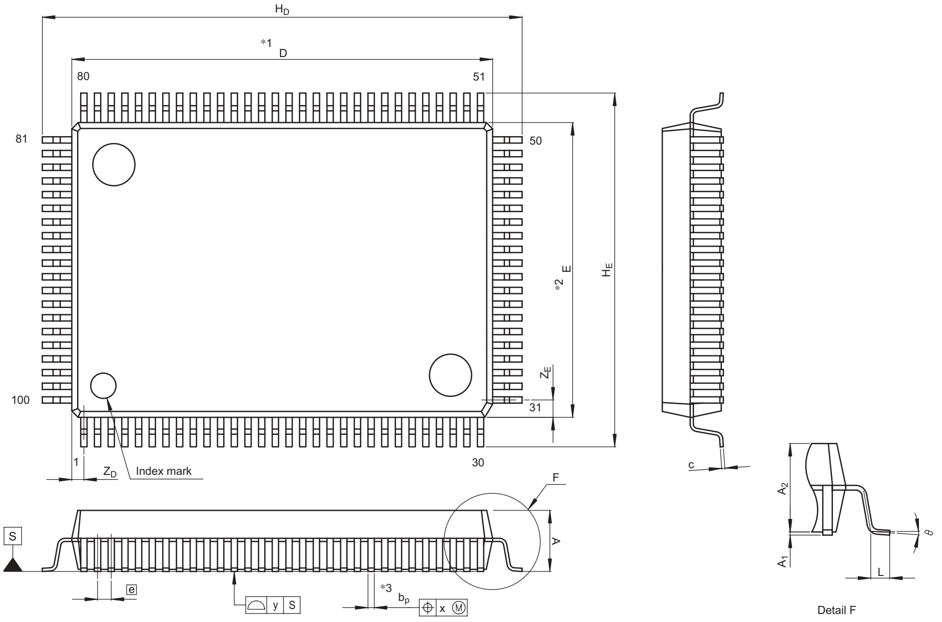
HD
*1 D
80
51
81
50
100
31
1
30
*2 E
HE
ZE
ZD
Index mark
F
S
A
e
y S
*3
bp
x M
c
A2
A1
θ
L
Detail F

NOTE)
1. DIMENSIONS "*1" AND "*2" DO NOT INCLUDE MOLD FLASH.
2. DIMENSION "*3" DOES NOT INCLUDE TRIM OFFSET.

Reference Symbol	Dimension in Millimeters		
	Min	Nom	Max
D	19.8	20.0	20.2
E	13.8	14.0	14.2
A_2	—	2.8	—
H_D	22.5	22.8	23.1
H_E	16.5	16.8	17.1
A	—	—	3.05
A_1	0	0.1	0.2
b_p	0.25	0.3	0.4
c	0.13	0.15	0.2
θ	0°	—	10°
$\boxed{e}$	—	0.65	—
x	—	—	0.13
y	—	—	0.10
Z_D	—	0.575	—
Z_E	—	0.825	—
L	0.4	0.6	0.8

General Precautions in the Handling of MPU/MCU Products

The following usage notes are applicable to all MPU/MCU products from Renesas. For detailed usage notes on the products covered by this manual, refer to the relevant sections of the manual. If the descriptions under General Precautions in the Handling of MPU/MCU Products and in the body of the manual differ from each other, the description in the body of the manual takes precedence.

1. Handling of Unused Pins

   Handle unused pins in accord with the directions given under Handling of Unused Pins in the manual.

   — The input pins of CMOS products are generally in the high-impedance state. In operation with an unused pin in the open-circuit state, extra electromagnetic noise is induced in the vicinity of LSI, an associated shoot-through current flows internally, and malfunctions occur due to the false recognition of the pin state as an input signal become possible. Unused pins should be handled as described under Handling of Unused Pins in the manual.

2. Processing at Power-on

   The state of the product is undefined at the moment when power is supplied.

   — The states of internal circuits in the LSI are indeterminate and the states of register settings and pins are undefined at the moment when power is supplied.

   In a finished product where the reset signal is applied to the external reset pin, the states of pins are not guaranteed from the moment when power is supplied until the reset process is completed.

   In a similar way, the states of pins in a product that is reset by an on-chip power-on reset function are not guaranteed from the moment when power is supplied until the power reaches the level at which resetting has been specified.

3. Prohibition of Access to Reserved Addresses

   Access to reserved addresses is prohibited.

   — The reserved addresses are provided for the possible future expansion of functions. Do not access these addresses; the correct operation of LSI is not guaranteed if they are accessed.

4. Clock Signals

   After applying a reset, only release the reset line after the operating clock signal has become stable. When switching the clock signal during program execution, wait until the target clock signal has stabilized.

   — When the clock signal is generated with an external resonator (or from an external oscillator) during a reset, ensure that the reset line is only released after full stabilization of the clock signal. Moreover, when switching to a clock signal produced with an external resonator (or by an external oscillator) while program execution is in progress, wait until the target clock signal is stable.

5. Differences between Products

   Before changing from one product to another, i.e. to one with a different part number, confirm that the change will not lead to problems.

   — The characteristics of MPU/MCU in the same group but having different part numbers may differ because of the differences in internal memory capacity and layout pattern. When changing to products of different part numbers, implement a system-evaluation test for each of the products.

Notice

1. All information included in this document is current as of the date this document is issued. Such information, however, is subject to change without any prior notice. Before purchasing or using any Renesas Electronics products listed herein, please confirm the latest product information with a Renesas Electronics sales office. Also, please pay regular and careful attention to additional and different information to be disclosed by Renesas Electronics such as that disclosed through our website.
2. Renesas Electronics does not assume any liability for infringement of patents, copyrights, or other intellectual property rights of third parties by or arising from the use of Renesas Electronics products or technical information described in this document. No license, express, implied or otherwise, is granted hereby under any patents, copyrights or other intellectual property rights of Renesas Electronics or others.
3. You should not alter, modify, copy, or otherwise misappropriate any Renesas Electronics product, whether in whole or in part.
4. Descriptions of circuits, software and other related information in this document are provided only to illustrate the operation of semiconductor products and application examples. You are fully responsible for the incorporation of these circuits, software, and information in the design of your equipment. Renesas Electronics assumes no responsibility for any losses incurred by you or third parties arising from the use of these circuits, software, or information.
5. When exporting the products or technology described in this document, you should comply with the applicable export control laws and regulations and follow the procedures required by such laws and regulations. You should not use Renesas Electronics products or the technology described in this document for any purpose relating to military applications or use by the military, including but not limited to the development of weapons of mass destruction. Renesas Electronics products and technology may not be used for or incorporated into any products or systems whose manufacture, use, or sale is prohibited under any applicable domestic or foreign laws or regulations.
6. Renesas Electronics has used reasonable care in preparing the information included in this document, but Renesas Electronics does not warrant that such information is error free. Renesas Electronics assumes no liability whatsoever for any damages incurred by you resulting from errors in or omissions from the information included herein.
7. Renesas Electronics products are classified according to the following three quality grades: "Standard", "High Quality", and "Specific". The recommended applications for each Renesas Electronics product depends on the product's quality grade, as indicated below. You must check the quality grade of each Renesas Electronics product before using it in a particular application. You may not use any Renesas Electronics product for any application categorized as "Specific" without the prior written consent of Renesas Electronics. Further, you may not use any Renesas Electronics product for any application for which it is not intended without the prior written consent of Renesas Electronics. Renesas Electronics shall not be in any way liable for any damages or losses incurred by you or third parties arising from the use of any Renesas Electronics product for an application categorized as "Specific" or for which the product is not intended where you have failed to obtain the prior written consent of Renesas Electronics. The quality grade of each Renesas Electronics product is "Standard" unless otherwise expressly specified in a Renesas Electronics data sheets or data books, etc.

"Standard":	Computers; office equipment; communications equipment; test and measurement equipment; audio and visual equipment; home electronic appliances; machine tools; personal electronic equipment; and industrial robots.
"High Quality":	Transportation equipment (automobiles, trains, ships, etc.); traffic control systems; anti-disaster systems; anti-crime systems; safety equipment; and medical equipment not specifically designed for life support.
"Specific":	Aircraft; aerospace equipment; submersible repeaters; nuclear reactor control systems; medical equipment or systems for life support (e.g. artificial life support devices or systems), surgical implantations, or healthcare intervention (e.g. excision, etc.), and any other applications or purposes that pose a direct threat to human life.

8. You should use the Renesas Electronics products described in this document within the range specified by Renesas Electronics, especially with respect to the maximum rating, operating supply voltage range, movement power voltage range, heat radiation characteristics, installation and other product characteristics. Renesas Electronics shall have no liability for malfunctions or damages arising out of the use of Renesas Electronics products beyond such specified ranges.
9. Although Renesas Electronics endeavors to improve the quality and reliability of its products, semiconductor products have specific characteristics such as the occurrence of failure at a certain rate and malfunctions under certain use conditions. Further, Renesas Electronics products are not subject to radiation resistance design. Please be sure to implement safety measures to guard them against the possibility of physical injury, and injury or damage caused by fire in the event of the failure of a Renesas Electronics product, such as safety design for hardware and software including but not limited to redundancy, fire control and malfunction prevention, appropriate treatment for aging degradation or any other appropriate measures. Because the evaluation of microcomputer software alone is very difficult, please evaluate the safety of the final products or system manufactured by you.
10. Please contact a Renesas Electronics sales office for details as to environmental matters such as the environmental compatibility of each Renesas Electronics product. Please use Renesas Electronics products in compliance with all applicable laws and regulations that regulate the inclusion or use of controlled substances, including without limitation, the EU RoHS Directive. Renesas Electronics assumes no liability for damages or losses occurring as a result of your noncompliance with applicable laws and regulations.
11. This document may not be reproduced or duplicated, in any form, in whole or in part, without prior written consent of Renesas Electronics.
12. Please contact a Renesas Electronics sales office if you have any questions regarding the information contained in this document or Renesas Electronics products, or if you have any other inquiries.

(Note 1) "Renesas Electronics" as used in this document means Renesas Electronics Corporation and also includes its majority-owned subsidiaries.

(Note 2) "Renesas Electronics product(s)" means any product developed or manufactured by or for Renesas Electronics.

RENESAS

SALES OFFICES Renesas Electronics Corporation http://www.renesas.com

Refer to "http://www.renesas.com/" for the latest and detailed information.

Renesas Electronics America Inc.
2880 Scott Boulevard Santa Clara, CA 95050-2554, U.S.A.
Tel: +1-408-588-6000, Fax: +1-408-588-6130

Renesas Electronics Canada Limited
1101 Nicholson Road, Newmarket, Ontario L3Y 9C3, Canada
Tel: +1-905-898-5441, Fax: +1-905-898-3220

Renesas Electronics Europe Limited
Dukes Meadow, Millboard Road, Bourne End, Buckinghamshire, SL8 5FH, U.K
Tel: +44-1628-585-100, Fax: +44-1628-585-900

Renesas Electronics Europe GmbH
Arcadiastrasse 10, 40472 Düsseldorf, Germany
Tel: +49-211-65030, Fax: +49-211-6503-1327

Renesas Electronics (China) Co., Ltd.
7th Floor, Quantum Plaza, No.27 ZhiChunLu Haidian District, Beijing 100083, P.R.China
Tel: +86-10-8235-1155, Fax: +86-10-8235-7679

Renesas Electronics (Shanghai) Co., Ltd.
Unit 204, 205, AZIA Center, No.1233 Lujiazui Ring Rd., Pudong District, Shanghai 200120, China
Tel: +86-21-5877-1818, Fax: +86-21-6887-7858 / -7898

Renesas Electronics Hong Kong Limited
Unit 1601-1613, 16/F., Tower 2, Grand Century Place, 193 Prince Edward Road West, Mongkok, Kowloon, Hong Kong
Tel: +852-2886-9318, Fax: +852 2886-9022/9044

Renesas Electronics Taiwan Co., Ltd.
13F, No. 363, Fu Shing North Road, Taipei, Taiwan
Tel: +886-2-8175-9600, Fax: +886 2-8175-9670

Renesas Electronics Singapore Pte. Ltd.
1 harbourFront Avenue, #06-10, keppel Bay Tower, Singapore 098632
Tel: +65-6213-0200, Fax: +65-6278-8001

Renesas Electronics Malaysia Sdn.Bhd.
Unit 906, Block B, Menara Amcorp, Amcorp Trade Centre, No. 18, Jln Persiaran Barat, 46050 Petaling Jaya, Selangor Darul Ehsan, Malaysia
Tel: +60-3-7955-9390, Fax: +60-3-7955-9510

Renesas Electronics Korea Co., Ltd.
11F., Samik Lavied' or Bldg., 720-2 Yeoksam-Dong, Kangnam-Ku, Seoul 135-080, Korea
Tel: +82-2-558-3737, Fax: +82-2-558-5141

© 2011 Renesas Electronics Corporation. All rights reserved.
Colophon 1.1