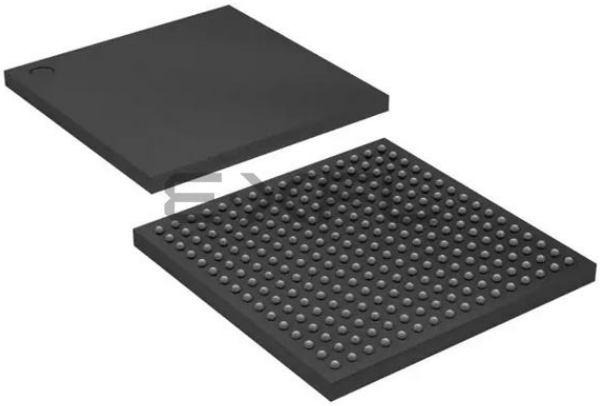

Welcome to E-XFL.COM

Understanding Embedded - FPGAs (Field Programmable Gate Array)

Embedded - FPGAs, or Field Programmable Gate Arrays, are advanced integrated circuits that offer unparalleled flexibility and performance for digital systems. Unlike traditional fixed-function logic devices, FPGAs can be programmed and reprogrammed to execute a wide array of logical operations, enabling customized functionality tailored to specific applications. This reprogrammability allows developers to iterate designs quickly and implement complex functions without the need for custom hardware.

Applications of Embedded - FPGAs

The versatility of Embedded - FPGAs makes them indispensable in numerous fields. In telecommunications.

Details	
Product Status	Active
Number of LABs/CLBs	963
Number of Logic Elements/Cells	15408
Total RAM Bits	516096
Number of I/O	165
Number of Gates	-
Voltage - Supply	1.15V ~ 1.25V
Mounting Type	Surface Mount
Operating Temperature	-40°C ~ 125°C (TJ)
Package / Case	256-LBGA
Supplier Device Package	256-FBGA (17x17)
Purchase URL	https://www.e-xfl.com/product-detail/intel/ep4ce15f17a7n

1. Cyclone IV FPGA Device Family Overview

CYIV-51001-2.0

Altera s new Cyclone fi IV FPGA device family extends the Cyclone FPGA series leadership in providing the market s lowest-cost, lowest-power FPGAs, now with a transceiver variant. Cyclone IV devices are targeted to high-volume, cost-sensitive applications, enabling system designers to meet increasing bandwidth requirements while lowering costs.

Built on an optimized low-power process, the Cyclone IV device family offers the following two variants:

- Cyclone IV E lowest power, high functionality with the lowest cost
- Cyclone IV GX lowest power and lowest cost FPGAs with 3.125 Gbps transceivers

1 Cyclone IV E devices are offered in core voltage of 1.0 V and 1.2 V.

f For more information, refer to the *Power Requirements for Cyclone IV Devices* chapter.

Providing power and cost savings without sacrificing performance, along with a low-cost integrated transceiver option, Cyclone IV devices are ideal for low-cost, small-form-factor applications in the wireless, wireline, broadcast, industrial, consumer, and communications industries.

Cyclone IV Device Family Features

The Cyclone IV device family offers the following features:

- Low-cost, low-power FPGA fabric:
  - 6K to 150K logic elements
  - Up to 6.3 Mb of embedded memory
  - Up to 360 18 ×18 multipliers for DSP processing intensive applications
  - Protocol bridging applications for under 1.5 W total power

' 2016 Altera Corporation. All rights reserved. ALTERA, ARRIA, CYCLONE, HARDCOPY, MAX, MEGACORE, NIOS, QUARTUS and STRATIX word s and logos are trademarks of Altera Corporation and registered in the U.S. Patent and Trademark Office and in other countries. All other w ords and logos identified as trademarks or service marks are the property of their respective holders as described at www.altera.com/common/legal.html . Altera warrants performance of its semiconductor products to current specifications in accordance with Altera's standard warranty, but reserves the right to make changes to any products and services at any time without notice. Altera assumes no responsibility or liability arising out of the application or use of any information, product, or service described herein except as expressly agreed to in writing by Altera. Altera customers are advised to obtain the latest version of device specifications before relying on any published information and before placing orders for products or services.

ISO 9001:2008 Registered

1 Violating the setup or hold time on the M9K memory block input registers may corrupt memory contents. This applies to both read and write operations.

Single-Port Mode

Single-port mode supports non-simultaneous read and write operations from a single address. Figure 3 6 shows the single-port memory configuration for Cyclone IV devices M9K memory blocks.

Figure 3–6. Single-Port Memory (1), (2)

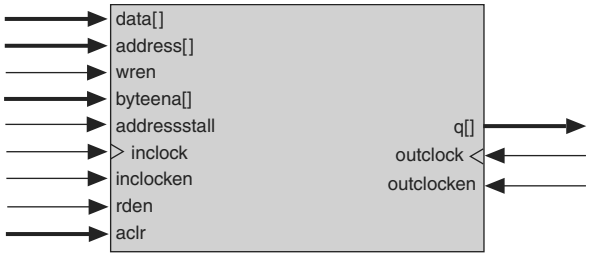

Notes to Figure 3–6:

(1) You can implement two single-port memory blocks in a single M9K block.

(2) For more information, refer to “Packed Mode Support” on page 3–4.

During a write operation, the behavior of the RAM outputs is configurable. If you activate rden during a write operation, the RAM outputs show either the new data being written or the old data at that address. If you perform a write operation with rden deactivated, the RAM outputs retain the values they held during the most recent active rden signal.

To choose the desired behavior, set the **Read-During-Write** option to either **New Data** or **Old Data** in the RAM MegaWizard Plug-In Manager in the Quartus II software. For more information about read-during-write mode, refer to Read-During-Write Operations on page 3 15 .

The port width configurations for M9K blocks in single-port mode are as follow:

- 8192 ×1
- 4096 ×2
- 2048 ×4
- 1024 ×8
- 1024 ×9
- 512 ×16
- 512 ×18
- 256 ×32
- 256 ×36

Document Revision History

Table 4 3 lists the revision history for this chapter.

Table 4–3. Document Revision History

Date	Version	Changes
February 2010	1.1	Added Cyclone IV E devices in Table 4–1 for the Quartus II software version 9.1 SP1 release.
November 2009	1.0	Initial release.

Table 5–2. GCLK Network Connections for EP4CGX30, EP4CGX50, EP4CGX75, EP4CGX110, and EP4CGX150 Devices *(1)*, *(2)* (Part 3 of 4)

GCLK Network Clock Sources	GCLK Networks																													
	0	1	2	3	4	5	6	7	8	9	10	11	12	13	14	15	16	17	18	19	20	21	22	23	24	25	26	27	28	29
PLL_8_C0 *(3)*	—	—	—	—	—	—	v	—	v	—	—	—	—	—	—	—	—	—	—	—	—	—	—	—	—	—	—	—	—	—
PLL_8_C1 *(3)*	—	—	—	—	—	—	—	—	—	—	—	—	—	—	—	—	—	—	—	—	—	—	—	—	—	—	—	—	—	—
PLL_8_C2 *(3)*	—	—	—	—	—	—	—	—	—	—	—	—	—	—	—	—	—	—	—	—	—	—	—	—	—	—	—	—	—	—
PLL_8_C3 *(3)*	—	—	—	—	—	—	—	v	—	v	—	—	—	—	—	—	—	—	—	—	—	—	—	—	—	—	—	—	—	—
PLL_8_C4 *(3)*	—	—	—	—	—	—	—	—	v	—	v	v	—	—	—	—	—	—	—	—	—	—	—	—	—	—	—	—	—	—
DPCLK0	—	—	—	—	—	—	—	—	—	—	—	—	—	—	—	—	—	—	—	—	—	—	—	—	—	v	—	—	—	—
DPCLK1	—	—	—	—	—	—	—	—	—	—	—	—	—	—	—	—	—	—	—	—	—	—	—	—	—	—	—	v	—	—
DPCLK2	—	—	—	—	—	—	—	—	—	—	—	—	—	—	—	—	—	—	—	—	—	—	—	—	—	—	—	—	—	v
DPCLK3	—	—	—	—	—	—	—	—	—	—	—	—	—	—	—	—	—	—	—	—	—	—	—	—	v	—	—	—	—	—
DPCLK4	—	—	—	—	—	—	—	—	—	—	—	—	—	—	—	—	—	—	—	—	—	—	—	—	—	—	v	—	—	—
DPCLK5	—	—	—	—	—	—	—	—	—	—	—	—	—	—	—	—	—	—	—	—	—	—	—	—	—	—	—	—	v	—
DPCLK6	—	—	—	—	—	—	—	—	—	—	—	—	—	—	—	—	—	v	—	—	—	—	—	—	—	—	—	—	—	—
DPCLK7	—	—	—	—	—	—	—	—	—	—	—	—	—	—	—	v	—	—	—	—	—	—	—	—	—	—	—	—	—	—
DPCLK8	—	—	—	—	—	—	—	—	—	—	—	—	—	v	—	—	—	—	—	—	—	—	—	—	—	—	—	—	—	—
DPCLK9	—	—	—	—	—	—	—	—	—	—	—	—	—	—	—	—	v	—	—	—	—	—	—	—	—	—	—	—	—	—
DPCLK10	—	—	—	—	—	—	—	—	—	—	—	—	—	—	v	—	—	—	—	—	—	—	—	—	—	—	—	—	—	—
DPCLK11	—	—	—	—	—	—	—	—	—	—	—	—	v	—	—	—	—	—	—	—	—	—	—	—	—	—	—	—	—	—
DPCLK12	—	—	—	—	—	—	—	—	—	—	—	—	—	—	—	—	—	—	—	—	—	—	v	—	—	—	—	—	—	—
DPCLK13	—	—	—	—	—	—	—	—	—	—	—	—	—	—	—	—	—	—	—	—	v	—	—	—	—	—	—	—	—	—
DPCLK14	—	—	—	—	—	—	—	—	—	—	—	—	—	—	—	—	—	—	v	—	—	—	—	—	—	—	—	—	—	—
DPCLK15	—	—	—	—	—	—	—	—	—	—	—	—	—	—	—	—	—	—	—	—	—	—	—	v	—	—	—	—	—	—
DPCLK16	—	—	—	—	—	—	—	—	—	—	—	—	—	—	—	—	—	—	—	—	—	v	—	—	—	—	—	—	—	—

Table 6–12. Document Revision History (Part 2 of 2)

Date	Version	Changes
February 2010	2.0	■ Added Cyclone IV E devices information for the Quartus II software version 9.1 SP1 release. ■ Updated Table 6–2, Table 6–3, and Table 6–10. ■ Updated “I/O Banks” section. ■ Added Figure 6–9. ■ Updated Figure 6–10 and Figure 6–11. ■ Added Table 6–4, Table 6–6, and Table 6–8.
November 2009	1.0	Initial release.

Figure 7 7 illustrates Cyclone IV DDR input registers.

Figure 7–7. Cyclone IV DDR Input Registers

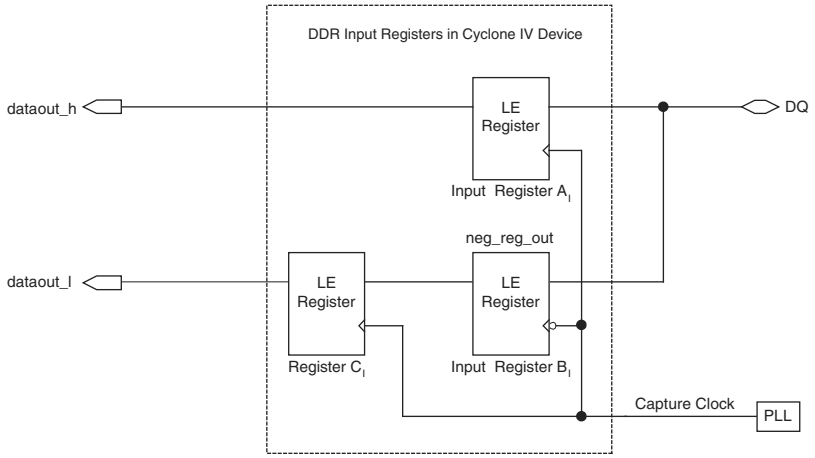

These DDR input registers are implemented in the core of devices. The DDR data is first fed to two registers, input register A_l and input register B_l.

- Input register A_l captures the DDR data present during the rising edge of the clock
- Input register B_l captures the DDR data present during the falling edge of the clock
- Register C_l aligns the data before it is synchronized with the system clock

The data from the DDR input register is fed to two registers, sync_reg_h and sync_reg_l, then the data is typically transferred to a FIFO block to synchronize the two data streams to the rising edge of the system clock. Because the read-capture clock is generated by the PLL, the read-data strobe signal (DQS or CQ) is not used during read operation in Cyclone IV devices; hence, postamble is not a concern in this case.

The remote system upgrade status register is updated by the dedicated error monitoring circuitry after an error condition, but before the factory configuration is loaded.

Table 8–26. Control Register Contents After an Error or Reconfiguration Trigger Condition

Reconfiguration Error/Trigger	Control Register Setting In Remote Update
nCONFIG reset	All bits are 0
nSTATUS error	All bits are 0
CORE triggered reconfiguration	Update register
CRC error	All bits are 0
Wd time out	All bits are 0

User Watchdog Timer

The user watchdog timer prevents a faulty application configuration from indefinitely stalling the device. The system uses the timer to detect functional errors after an application configuration is successfully loaded into the Cyclone IV device.

The user watchdog timer is a counter that counts down from the initial value loaded into the remote system upgrade control register by the factory configuration. The counter is 29 bits wide and has a maximum count value of 2^{29}. When specifying the user watchdog timer value, specify only the most significant 12 bits. The remote system upgrade circuitry appends 17'b1000 to form the 29-bits value for the watchdog timer. The granularity of the timer setting is 2^{17} cycles. The cycle time is based on the frequency of the 10-MHz internal oscillator or CLKUSR (maximum frequency of 40 MHz).

Table 8 27 lists the operating range of the 10-MHz internal oscillator.

Table 8–27. 10-MHz Internal Oscillator Specifications

Minimum	Typical	Maximum	Unit
5	6.5	10	MHz

The user watchdog timer begins counting after the application configuration enters device user mode. This timer must be periodically reloaded or reset by the application configuration before the timer expires by asserting RU_nRSTIMER. If the application configuration does not reload the user watchdog timer before the count expires, a time-out signal is generated by the remote system upgrade dedicated circuitry. The time-out signal tells the remote system upgrade circuitry to set the user watchdog timer status bit (Wd) in the remote system upgrade status register and reconfigures the device by loading the factory configuration.

1 To allow the remote system upgrade dedicated circuitry to reset the watchdog timer, you must assert the RU_nRSTIMER signal active for a minimum of 250 ns. This is equivalent to strobing the reset_timer input of the ALTREMOTE_UPDATE megafunction high for a minimum of 250 ns.

Errors during configuration are detected by the CRC engine. Functional errors must not exist in the factory configuration because it is stored and validated during production and is never updated remotely.

Document Revision History

Table 9 8 lists the revision history for this chapter.

Table 9–8. Document Revision History

Date	Version	Changes
May 2013	1.3	Updated “CRC_ERROR Pin Type” in Table 9–2.
October 2012	1.2	Updated Table 9–2.
February 2010	1.1	Updated for the Quartus II software version 9.1 SP1 release: ■ Updated “Configuration Error Detection” section. ■ Updated Table 9–6. ■ Added Cyclone IV E devices in Table 9–6.
November 2009	1.0	Initial release.

Figure 10 2 shows the Cyclone IV GX HSSI receiver BSC.

Figure 10–2. HSSI Receiver BSC with IEEE Std. 1149.6 BST Circuitry for the Cyclone IV GX Devices

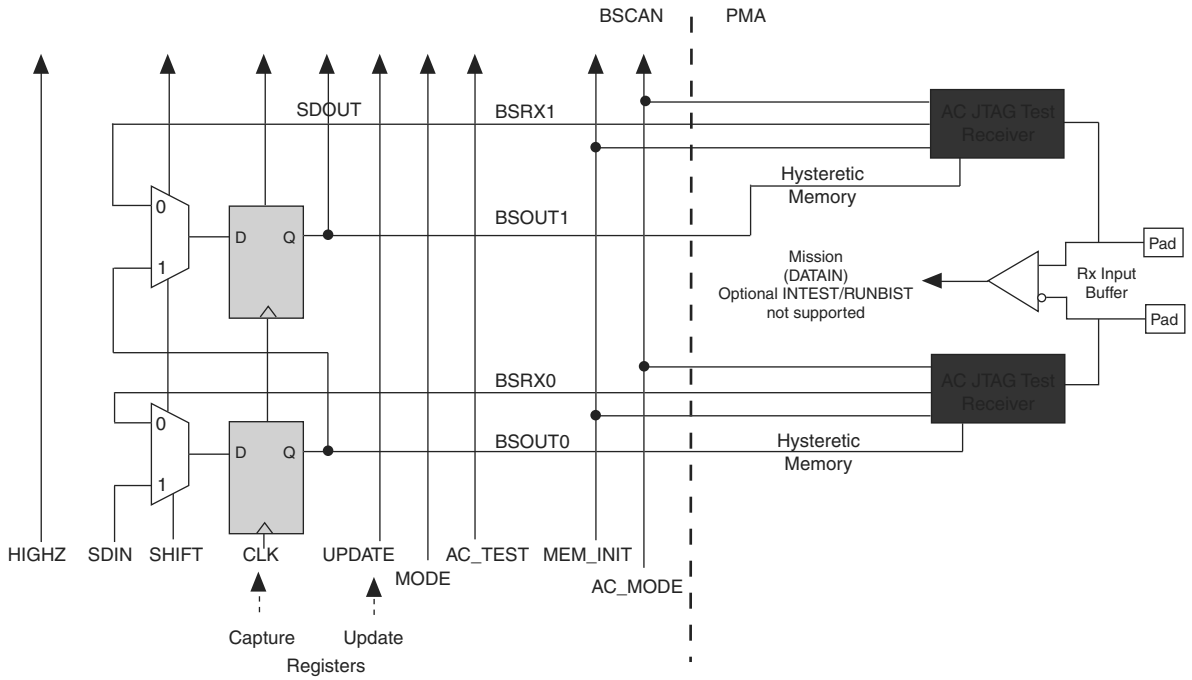

f For more information about Cyclone IV devices user I/O boundary-scan cells, refer to the *IEEE 1149.1 (JTAG) Boundary-Scan Testing for Cyclone III Devices* chapter.

BST Operation Control

Table 10 1 lists the boundary-scan register length for Cyclone IV devices.

Table 10–1. Boundary-Scan Register Length for Cyclone IV Devices (Part 1 of 2)

Device	Boundary-Scan Register Length
EP4CE6	603
EP4CE10	603
EP4CE15	1080
EP4CE22	732
EP4CE30	1632
EP4CE40	1632
EP4CE55	1164
EP4CE75	1314
EP4CE115	1620
EP4CGX15	260
EP4CGX22	494
EP4CGX30 (1)	494
EP4CGX50	1006

Table 10–1. Boundary-Scan Register Length for Cyclone IV Devices (Part 2 of 2)

Device	Boundary-Scan Register Length
EP4CGX75	1006
EP4CGX110	1495
EP4CGX150	1495

Note to Table 10–1:

(1) For the F484 package of the EP4CGX30 device, the boundary-scan register length is 1006.

Table 10 2 lists the IDCODEinformation for Cyclone IV devices.

Table 10–2. IDCODE Information for 32-Bit Cyclone IV Devices

Device	IDCODE (32 Bits) (1)			
	Version (4 Bits)	Part Number (16 Bits)	Manufacturer Identity (11 Bits)	LSB (1 Bit) (2)
EP4CE6	0000	0010 0000 1111 0001	000 0110 1110	1
EP4CE10	0000	0010 0000 1111 0001	000 0110 1110	1
EP4CE15	0000	0010 0000 1111 0010	000 0110 1110	1
EP4CE22	0000	0010 0000 1111 0011	000 0110 1110	1
EP4CE30	0000	0010 0000 1111 0100	000 0110 1110	1
EP4CE40	0000	0010 0000 1111 0100	000 0110 1110	1
EP4CE55	0000	0010 0000 1111 0101	000 0110 1110	1
EP4CE75	0000	0010 0000 1111 0110	000 0110 1110	1
EP4CE115	0000	0010 0000 1111 0111	000 0110 1110	1
EP4CGX15	0000	0010 1000 0000 0001	000 0110 1110	1
EP4CGX22	0000	0010 1000 0001 0010	000 0110 1110	1
EP4CGX30 (3)	0000	0010 1000 0000 0010	000 0110 1110	1
EP4CGX30 (4)	0000	0010 1000 0010 0011	000 0110 1110	1
EP4CGX50	0000	0010 1000 0001 0011	000 0110 1110	1
EP4CGX75	0000	0010 1000 0000 0011	000 0110 1110	1
EP4CGX110	0000	0010 1000 0001 0100	000 0110 1110	1
EP4CGX150	0000	0010 1000 0000 0100	000 0110 1110	1

Notes to Table 10–2:

(1) The MSB is on the left.

(2) The IDCODELSB is always 1.

(3) The IDCODE is applicable for all packages except for the F484 package.

(4) The IDCODE is applicable for the F484 package only.

IEEE Std.1149.6 mandates the addition of two new instructions: EXTEST_PULSEand EXTEST_TRAIN These two instructions enable edge-detecting behavior on the signal path containing the AC pins.

The high-speed serial link can be AC- or DC-coupled, depending on the serial protocol implementation. In an AC-coupled link, the AC-coupling capacitor blocks the transmitter DC common mode voltage as shown in Figure 1–12. Receiver OCT and on-chip biasing circuitry automatically restores the common mode voltage. The biasing circuitry is also enabled by enabling OCT. If you disable the OCT, then you must externally terminate and bias the receiver. AC-coupled links are required for PCIe, GbE, Serial RapidIO, SDI, XAUI, SATA, V-by-One and Display Port protocols.

Figure 1–12. AC-Coupled Link with OCT

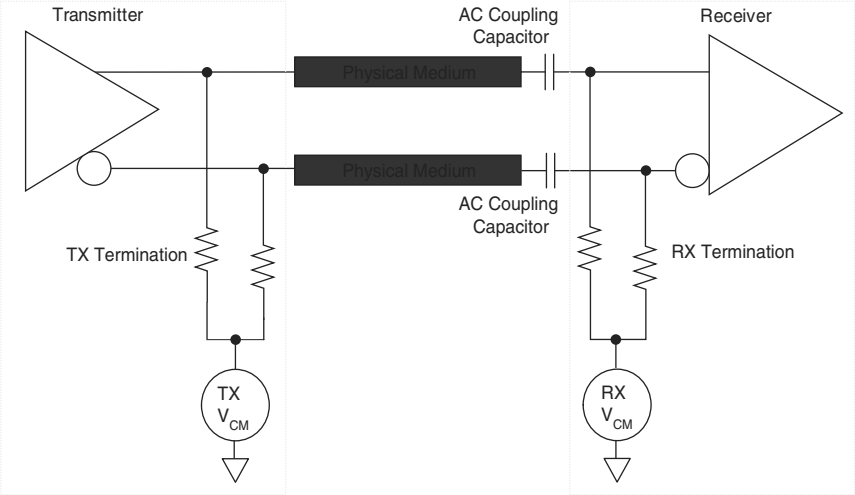

Figure 1–31 and Figure 1–32 show the high- and low-speed clock distribution for transceivers in F324 and smaller packages, and in F484 and larger packages in non-bonded channel configuration.

Figure 1–31. Clock Distribution in Non-Bonded Channel Configuration for Transceivers in F324 and Smaller Packages

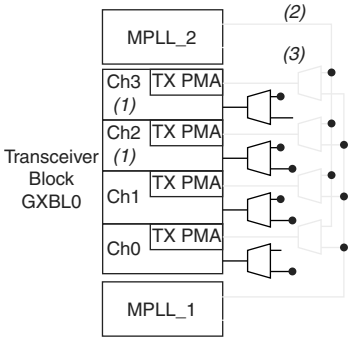

Notes to Figure 1–31:

(1) Transceiver channels 2 and 3 are not available for devices in F169 and smaller packages.

(2) High-speed clock.

(3) Low-speed clock.

Figure 1–64 shows the transceiver configuration in XAUI mode.

Figure 1–64. Transceiver Configuration in XAUI Mode

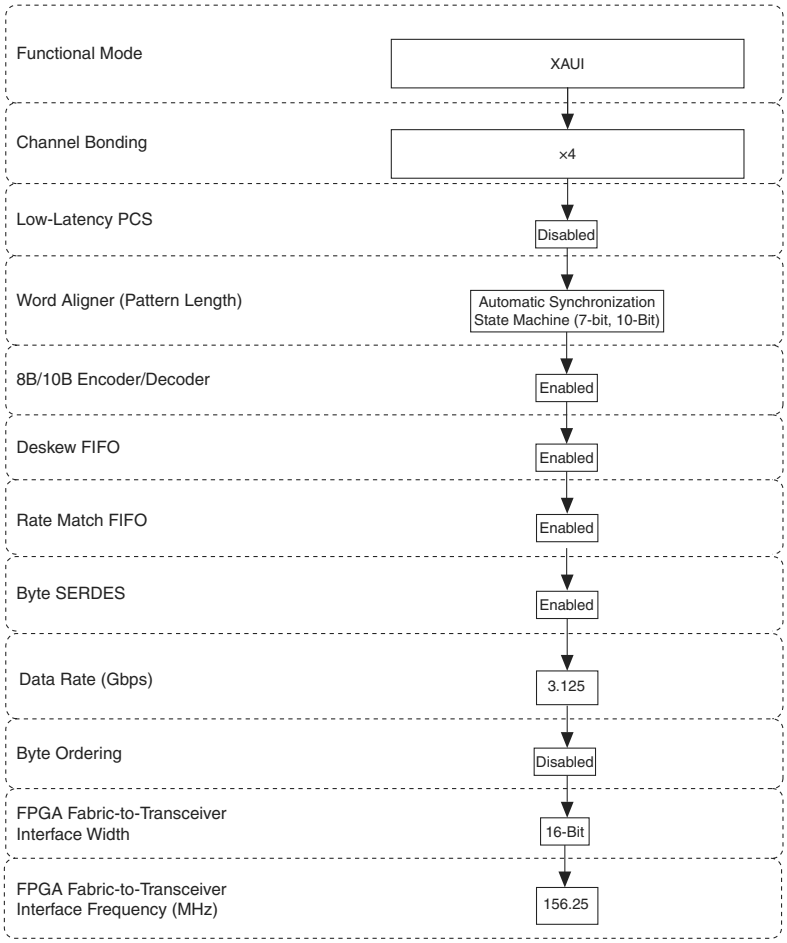

XGMII and PCS Code Conversions

In XAUI mode, the 8B/10B encoder in the transmitter datapath maps various 8-bit XGMII codes to 10-bit PCS code groups as listed in Table 1–21.

Table 1–21. XGMII Character to PCS Code Groups Mapping (Part 1 of 2)

XGMII TXC (1)	XGMII TXD (2), (3)	PCS Code Group	Description
0	00 through FF	Dxx,y	Normal data transmission
1	07	K28.0, K28.3, or K28.5	Idle in ||I||
1	07	K28.5	Idle in ||T||
1	9C	K28.4	Sequence
1	FB	K27.7	Start
1	FD	K29.7	Terminate
1	FE	K30.7	Error

BIST

Figure 1–73 shows the datapath for BIST incremental data pattern test mode. The BIST incremental data generator and verifier are located near the FPGA fabric in the PCS block of the transceiver channel.

Figure 1–73. BIST Incremental Pattern Test Mode Datapath

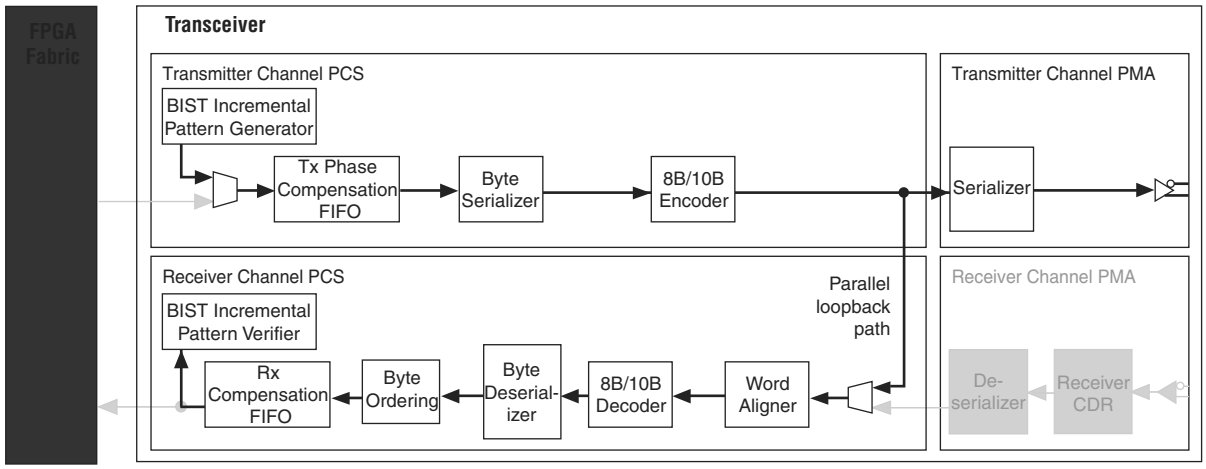

The incremental pattern generator and verifier are 16-bits wide. The generated pattern increments from 00 to FF and passes through the TX PCS blocks, parallel looped back to RX PCS blocks, and checked by the verifier. The pattern is also available as serial data at the `tx_dataout` port. The differential output voltage of the transmitted serial data on the `tx_dataout` port is based on the selected V_{OD} settings. The incremental data pattern is not available to the FPGA logic at the receiver for verification.

The following are the transceiver channel configuration settings in this mode:

- PCS-FPGA fabric channel width: 16-bit
- 8B / 10B blocks: Enabled
- Byte serializer / deserializer: Enabled
- Word aligner: Automatic synchronization state machine mode
- Byte ordering: Enabled

The `rx_bisterr` and `rx_bistdone` signals indicate the status of the verifier. The `rx_bisterr` signal is asserted and stays high when detecting an error in the data. The `rx_bistdone` signal is asserted and stays high when the verifier either receives a full cycle of incremental pattern or it detects an error in the receiver data. You can reset the incremental pattern generator and verifier by asserting the `tx_digitalreset` and `rx_digitalreset` ports, respectively.

Table 1–27. Receiver Ports in ALTGX Megafunction for Cyclone IV GX (Part 1 of 3)

Block	Port Name	Input/ Output	Clock Domain	Description
RX PCS	rx_syncstatus	Output	Synchronous to `tx_clkout` (non-bonded modes with rate match FIFO), `rx_clkout` (non-bonded modes without rate match FIFO), `coreclkout` (bonded modes), or `rx_coreclk` (when using the optional `rx_coreclk` input)	Word alignment synchronization status indicator. This signal passes through the RX Phase Compensation FIFO. ■ Not available in bit-slip mode
	rx_patternde tect	Output	Synchronous to `tx_clkout` (non-bonded modes with rate match FIFO), `rx_clkout` (non-bonded modes without rate match FIFO), `coreclkout` (bonded modes), or `rx_coreclk` (when using the optional `rx_coreclk` input)	Indicates when the word alignment logic detects the alignment pattern in the current word boundary. This signal passes through the RX Phase Compensation FIFO.
	rx_bitslip	Input	Asynchronous signal. Minimum pulse width is two parallel clock cycles.	Bit-slip control for the word aligner configured in bit-slip mode. ■ At every rising edge, word aligner slips one bit into the received data stream, effectively shifting the word boundary by one bit.
	rx_rlv	Output	Asynchronous signal. Driven for a minimum of two recovered clock cycles in configurations without byte serializer and a minimum of three recovered clock cycles in configurations with byte serializer.	Run-length violation indicator. ■ A high pulse indicates that the number of consecutive 1s or 0s in the received data stream exceeds the programmed run length violation threshold.
	rx_invpolarity	Input	Asynchronous signal. Minimum pulse width is two parallel clock cycles.	Generic receiver polarity inversion control. ■ A high level to invert the polarity of every bit of the 8- or 10-bit data to the word aligner.
	rx_enapattern align	Input	Asynchronous signal.	Controls the word aligner operation configured in manual alignment mode.
	rx_rmfifodata inserted	Output	Synchronous to `tx_clkout` (non-bonded modes) or `coreclkout` (bonded modes)	Rate match FIFO insertion status indicator. ■ A high level indicates the rate match pattern byte is inserted to compensate for the ppm difference in the reference clock frequencies between the upstream transmitter and the local receiver.
	rx_rmfifodata deleted	Output	Synchronous to `tx_clkout` (non-bonded modes) or `coreclkout` (bonded modes)	Rate match FIFO deletion status indicator. ■ A high level indicates the rate match pattern byte is deleted to compensate for the ppm difference in the reference clock frequencies between the upstream transmitter and the local receiver.

4. Wait for at least $t_{LTR_LTD_Manual}$ (the time between markers 6 and 7), then deassert the `rx_locktorefclk` signal. At the same time, assert the `rx_locktodata` signal (marker 7). At this point, the receiver CDR enters lock-to-data mode and the receiver CDR starts locking to the received data.
5. Deassert `rx_digitalreset` at least t_{LTD_Manual} (the time between markers 7 and 8) after asserting the `rx_locktodata` signal. At this point, the transmitter and receiver are ready for data traffic.

Reset Sequence in Loss of Link Conditions

Loss of link can occur due to loss of local reference clock source or loss of the link due to an unplugged cable. Other adverse conditions like loss of power could also cause the loss of signal from the other device or link partner.

Loss of Local REFCLK or Other Reference Clock Condition

Should local reference clock input become disabled or unstable, take the following steps:

1. Monitor `pll_locked` signal. `Pll_locked` is de-asserted if local reference clock source becomes unavailable.
2. `Pll_locked` assertion indicates a stable reference clock because TX PLL locks to the incoming clock. You can follow appropriate reset sequence provided in the device handbook, starting from `pll_locked` assertion.

Loss of Link Due To Unplugged Cable or Far End Shut-off Condition

Use one or more of the following methods to identify whether link partner is alive:

- Signal detect is available in PCIe and Basic modes. You can monitor `rx_signaldetect` signal as loss of link indicator. `rx_signaldetect` is asserted when the link partner comes back up.
- You can implement a ppm detector in device core for modes that do not have signal detect to monitor the link. Ppm detector helps in identifying whether the link is alive.
- Data corruption or RX phase comp FIFO overflow or underflow condition in user logic may indicate a loss of link condition.

Apply the following reset sequences when loss of link is detected:

- For Automatic CDR lock mode:
  a. Monitor `rx_freqlocked` signal. Loss of link causes `rx_freqlocked` to be de-asserted when CDR moves back to lock-to-data (LTD) mode.
  b. Assert `rx_digitalreset`.
  c. `rx_freqlocked` toggles over time when CDR switches between lock-to-reference (LTR) and LTD modes.
  d. If `rx_freqlocked` goes low at any point, re-assert `rx_digitalreset`.
  e. If data corruption or RX phase comp FIFO overflow or underflow condition is observed in user logic, assert `rx_digitalreset` for 2 parallel clock cycles, then de-assert the signal.

Figure 3–5 shows the read transaction waveform for Method 1.

Figure 3–5. Read Transaction Waveform—Use ‘logical_channel_address port’ Option

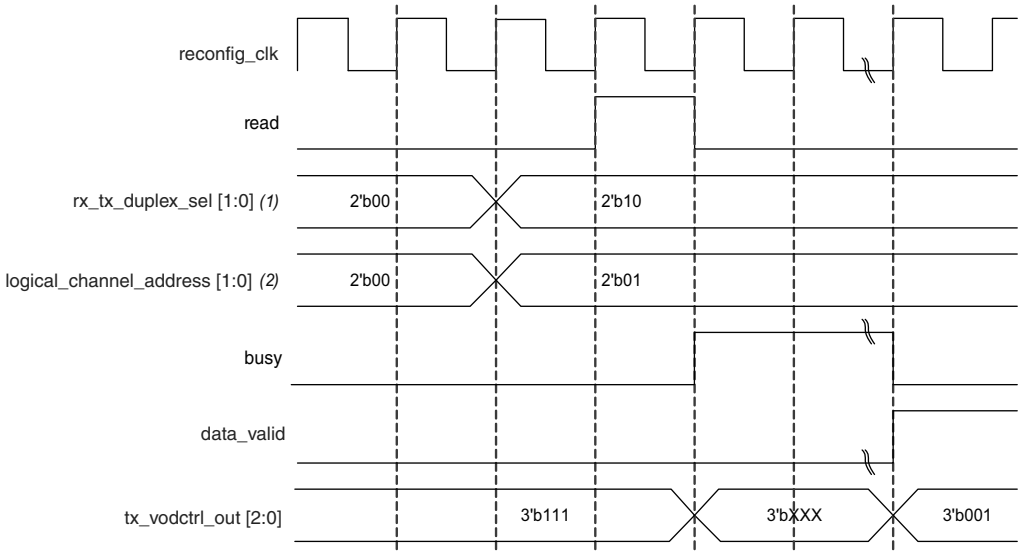

Notes to Figure 3–5:

(1) In this waveform example, you want to read from only the transmitter portion of the channel.

(2) In this waveform example, the number of channels connected to the dynamic reconfiguration controller is four. Therefore, the `logical_channel_address` port is 2 bits wide.

1 Simultaneous write and read transactions are not allowed.

Method 2: Writing the Same Control Signals to Control All the Transceiver Channels

This method does not require the `logical_channel_address` port. The PMA controls of all the transceiver channels connected to the ALTGX_RECONFIG instance are reconfigured.

The **Use the same control signal for all the channels** option is available on the **Analog controls** tab of the ALTGX_RECONFIG MegaWizard Plug-In Manager. If you enable this option, the width of the PMA control ports are fixed as follows:

PMA Control Ports Used in a Write Transaction

- `tx_vodctrl` is fixed to 3 bits
- `tx_preemp` is fixed to 5 bits
- `rx_eqdcgain` is fixed to 2 bits
- `rx_eqctrl` is fixed to 4 bits