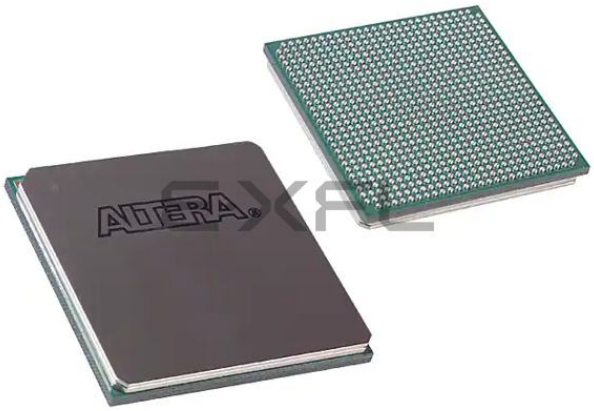

Welcome to E-XFL.COM

Understanding Embedded - FPGAs (Field Programmable Gate Array)

Embedded - FPGAs, or Field Programmable Gate Arrays, are advanced integrated circuits that offer unparalleled flexibility and performance for digital systems. Unlike traditional fixed-function logic devices, FPGAs can be programmed and reprogrammed to execute a wide array of logical operations, enabling customized functionality tailored to specific applications. This reprogrammability allows developers to iterate designs quickly and implement complex functions without the need for custom hardware.

Applications of Embedded - FPGAs

The versatility of Embedded - FPGAs makes them indispensable in numerous fields. In telecommunications.

Details	
Product Status	Active
Number of LABs/CLBs	2475
Number of Logic Elements/Cells	39600
Total RAM Bits	1161216
Number of I/O	532
Number of Gates	-
Voltage - Supply	1.15V ~ 1.25V
Mounting Type	Surface Mount
Operating Temperature	0°C ~ 85°C (TJ)
Package / Case	780-BGA
Supplier Device Package	780-FBGA (29x29)
Purchase URL	https://www.e-xfl.com/product-detail/intel/ep4ce40f29c6

This chapter provides additional information about the document and Altera.

About this Handbook

This handbook provides comprehensive information about the Altera® Cyclone® IV family of devices.

How to Contact Altera

To locate the most up-to-date information about Altera products, refer to the following table.

Contact (1)	Contact Method	Address
Technical support	Website	www.altera.com/support
Technical training	Website	www.altera.com/training
	Email	custrain@altera.com
Product literature	Website	www.altera.com/literature
Nontechnical support (general)	Email	nacomp@altera.com
(software licensing)	Email	authorization@altera.com

Note to Table:

(1) You can also contact your local Altera sales office or sales representative.

Typographic Conventions

The following table shows the typographic conventions this document uses.

Visual Cue	Meaning
Bold Type with Initial Capital Letters	Indicate command names, dialog box titles, dialog box options, and other GUI labels. For example, **Save As** dialog box. For GUI elements, capitalization matches the GUI.
bold type	Indicates directory names, project names, disk drive names, file names, file name extensions, software utility names, and GUI labels. For example, **\qdesigns** directory, **D:** drive, and **chiptrip.gdf** file.
Italic Type with Initial Capital Letters	Indicate document titles. For example, *Stratix IV Design Guidelines*.
italic type	Indicates variables. For example, $n + 1$. Variable names are enclosed in angle brackets (< >). For example, *<file name>* and *<project name>***.pof** file.
Initial Capital Letters	Indicate keyboard keys and menu names. For example, the Delete key and the Options menu.
“Subheading Title”	Quotation marks indicate references to sections in a document and titles of Quartus II Help topics. For example, “Typographic Conventions.”

Figure 5–7 shows how to implement the `clkena` signal with a single register.

Figure 5–7. clkena Implementation

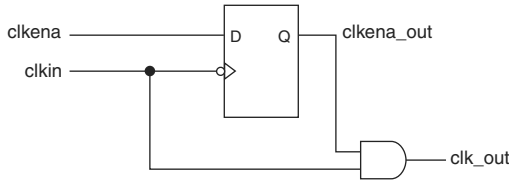

The `clkena` circuitry controlling the output C0 of the PLL to an output pin is implemented with two registers instead of a single register, as shown in Figure 5–7.

Figure 5–8 shows the waveform example for a clock output enable. The `clkena` signal is sampled on the falling edge of the clock (`clkin`).

This feature is useful for applications that require low power or sleep mode.

Figure 5–8. clkena Implementation: Output Enable

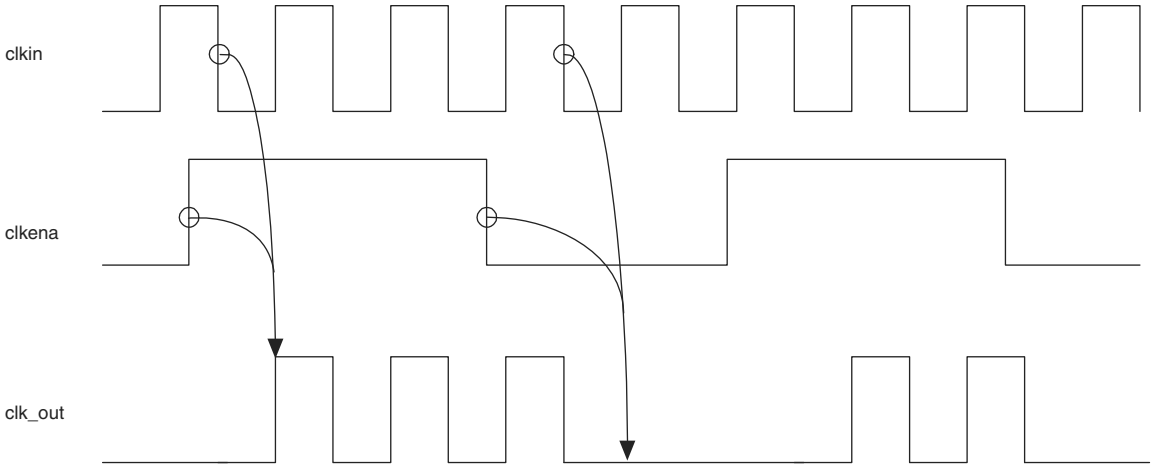

The `clkena` signal can also disable clock outputs if the system is not tolerant to frequency overshoot during PLL resynchronization.

Altera recommends using the `clkena` signals when switching the clock source to the PLLs or the GCLK. The recommended sequence is:

1. Disable the primary output clock by de-asserting the `clkena` signal.
2. Switch to the secondary clock using the dynamic select signals of the clock control block.
3. Allow some clock cycles of the secondary clock to pass before reasserting the `clkena` signal. The exact number of clock cycles you must wait before enabling the secondary clock is design-dependent. You can build custom logic to ensure glitch-free transition when switching between different clock sources.

Table 6–2 lists the I/O standards that support impedance matching and series termination.

Table 6–2. Cyclone IV Device I/O Features Support (Part 1 of 2)

I/O Standard	IOH/IOL Current Strength Setting (mA) (1), (9)		R_S OCT with Calibration Setting, Ohm (Ω)		R_S OCT Without Calibration Setting, Ohm (Ω)		Cyclone IV E I/O Banks Support	Cyclone IV GX I/O Banks Support	Slew Rate Option (6)	PCI-clamp Diode Support
	Column I/O	Row I/O	Column I/O	Row I/O (8)	Column I/O	Row I/O (8)				
3.3-V LVTTL	4,8	4,8	—	—	—	—	1,2,3,4, 5,6,7,8	3,4,5,6, 7,8,9	—	✓
3.3-V LVCMOS	2	2	—	—	—	—			—	✓
3.0-V LVTTL	4,8,12,16	4,8,12,16	50,25	50,25	50,25	50,25			0,1,**2**	✓
3.0-V LVCMOS	4,8,12,16	4,8,12,16	50,25	50,25	50,25	50,25				✓
3.0-V PCI/PCI-X	—	—	—	—	—	—			—	✓
2.5-V LVTTL/LVCMOS	4,8,12,16	4,8,12,16	50,25	50,25	50,25	50,25			0,1,**2**	✓
1.8-V LVTTL/LVCMOS	2,4,6,8,10,12,16	2,4,6,8,10,12,16	50,25	50,25	50,25	50,25				—
1.5-V LVCMOS	2,4,6,8,10,12,16	2,4,6,8,10,12,16	50,25	50,25	50,25	50,25				—
1.2-V LVCMOS	2,4,6,8,10,12	2,4,6,8,10	50,25	50	50,25	50		4,5,6,7, 8		—
SSTL-2 Class I	8,12	8,12	50	50	50	50		3,4,5,6, 7,8,9		—
SSTL-2 Class II	16	16	25	25	25	25				—
SSTL-18 Class I	8,10,12	8,10,12	50	50	50	50				—
SSTL-18 Class II	12,16	12,16	25	25	25	25				—
HSTL-18 Class I	8,10,12	8,10,12	50	50	50	50				—
HSTL-18 Class II	16	16	25	25	25	25				—
HSTL-15 Class I	8,10,12	8,10,12	50	50	50	50				—
HSTL-15 Class II	16	16	25	25	25	25				—
HSTL-12 Class I	8,10,12	8,10	50	50	50	50		4,5,6,7, 8		—
HSTL-12 Class II	14	—	25	—	25	—	3,4,7,8	4,7,8		—
Differential SSTL-2 Class I (2), (7)	8,12	8,12	50	50	50	50	1,2,3,4, 5,6,7,8	3,4,5,6, 7,8	0,1,**2**	—
Differential SSTL-2 Class II (2), (7)	16	16	25	25	25	25				—
Differential SSTL-18 (2), (7)	8,10,12	—	50	—	50	—				—
Differential HSTL-18 (2), (7)	8,10,12	—	50	—	50	—				—
Differential HSTL-15 (2), (7)	8,10,12	—	50	—	50	—				—
Differential HSTL-12 (2), (7)	8,10,12	—	50	—	50	—	3,4,7,8	4,7,8		—

Differential I/O Standard Termination

Differential I/O standards typically require a termination resistor between the two signals at the receiver. The termination resistor must match the differential load impedance of the bus (refer to Figure 6–7 and Figure 6–8).

Cyclone IV devices support differential SSTL-2 and SSTL-18, differential HSTL-18, HSTL-15, and HSTL-12, PPDS, LVDS, RSDS, mini-LVDS, and differential LVPECL.

Figure 6–7. Cyclone IV Devices Differential HSTL I/O Standard Class I and Class II Interface and Termination

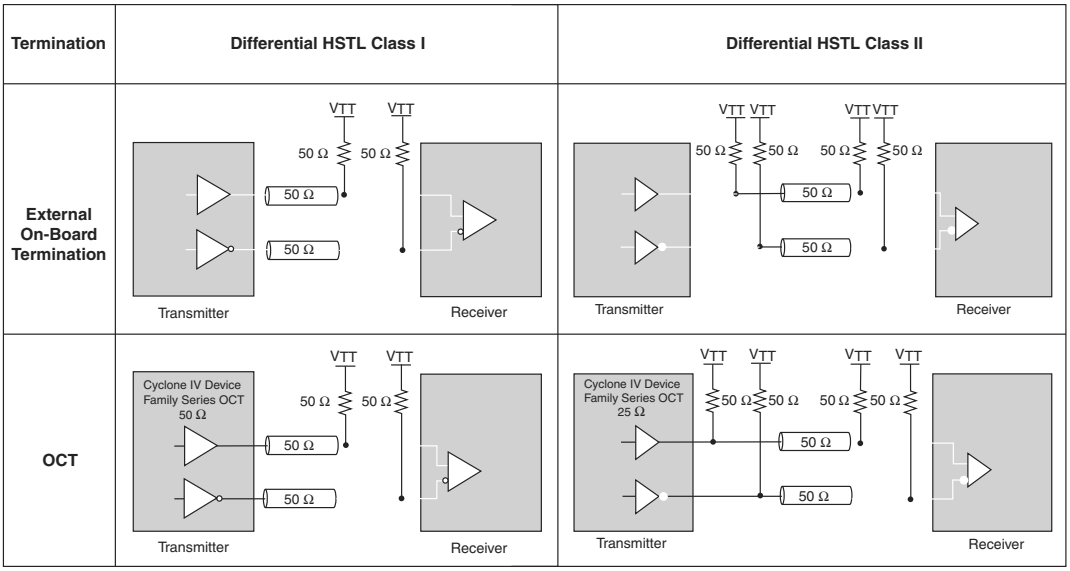

Figure 6–8. Cyclone IV Devices Differential SSTL I/O Standard Class I and Class II Interface and Termination *(1)*

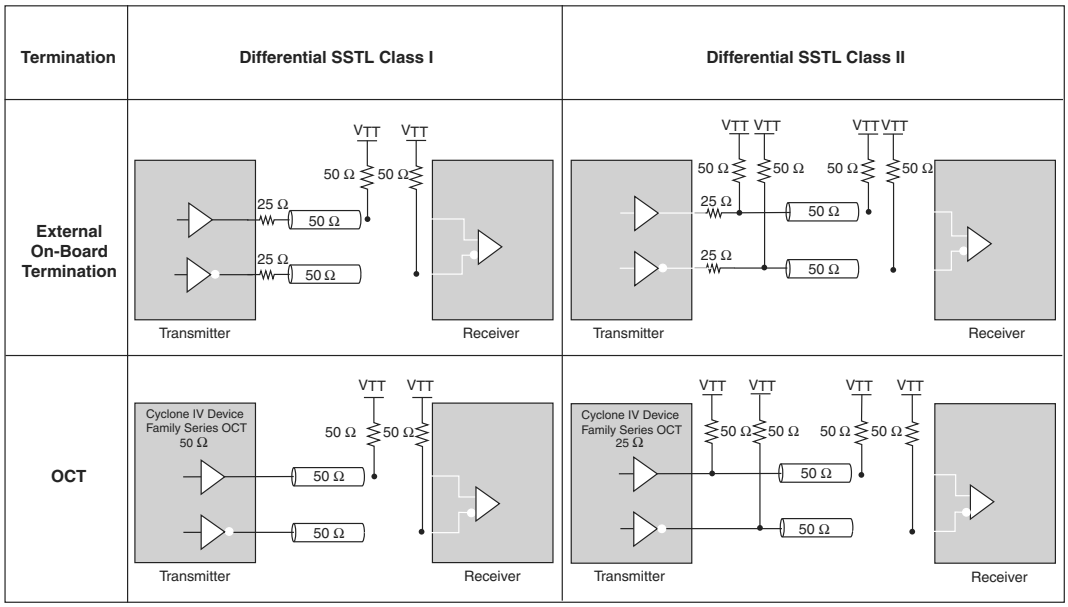

Note to Figure 6–8:

(1) Only Differential SSTL-2 I/O standard supports Class II output.

Table 6–7. Differential I/O Standards Supported in Cyclone IV GX I/O Banks

Differential I/O Standards	I/O Bank Location	External Resistor Network at Transmitter	Transmitter (TX)	Receiver (RX)
LVDS	5,6	Not Required	✓	✓
	3,4,5,6,7,8	Three Resistors		
RSDS	5,6	Not Required	✓	—
	3,4,7,8	Three Resistors		
	3,4,5,6,7,8	Single Resistor		
mini-LVDS	5,6	Not Required	✓	—
	3,4,5,6,7,8	Three Resistors		
PPDS	5,6	Not Required	✓	—
	3,4,5,6,7,8	Three Resistors		
BLVDS *(1)*	3,4,5,6,7,8	Single Resistor	✓	✓
LVPECL *(2)*	3,4,5,6,7,8	—	—	✓
Differential SSTL-2 *(3)*	3,4,5,6,7,8	—	✓	✓
Differential SSTL-18 *(3)*	3,4,5,6,7,8	—	✓	✓
Differential HSTL-18 *(3)*	3,4,5,6,7,8	—	✓	✓
Differential HSTL-15 *(3)*	3,4,5,6,7,8	—	✓	✓
Differential HSTL-12 *(3)*	4,5,6,7,8	—	✓	✓

Notes to Table 6–7:

(1) Transmitter and Receiver f_{MAX} depend on system topology and performance requirement.

(2) The LVPECL I/O standard is only supported on dedicated clock input pins.

(3) The differential SSTL-2, SSTL-18, HSTL-18, HSTL-15, and HSTL-12 I/O standards are only supported on clock input pins and PLL output clock pins. PLL output clock pins do not support Class II interface type of differential SSTL-18, HSTL-18, HSTL-15, and HSTL-12 I/O standards.

You can use I/O pins and internal logic to implement a high-speed differential interface in Cyclone IV devices. Cyclone IV devices do not contain dedicated serialization or deserialization circuitry. Therefore, shift registers, internal phase-locked loops (PLLs), and I/O cells are used to perform serial-to-parallel conversions on incoming data and parallel-to-serial conversion on outgoing data. The differential interface data serializers and deserializers (SERDES) are automatically constructed in the core logic elements (LEs) with the Quartus II software ALTLVDS megafunction.

Designing with LVDS

Cyclone IV I/O banks support the LVDS I/O standard. The Cyclone IV GX right I/O banks support true LVDS transmitters while the Cyclone IV E left and right I/O banks support true LVDS transmitters. On the top and bottom I/O banks, the emulated LVDS transmitters are supported using two single-ended output buffers with external resistors. One of the single-ended output buffers is programmed to have opposite polarity. The LVDS receiver requires an external 100-Ω termination resistor between the two signals at the input buffer.

Figure 6–12 shows a point-to-point LVDS interface using Cyclone IV devices true LVDS output and input buffers.

Figure 6–12. Cyclone IV Devices LVDS Interface with True Output Buffer on the Right I/O Banks

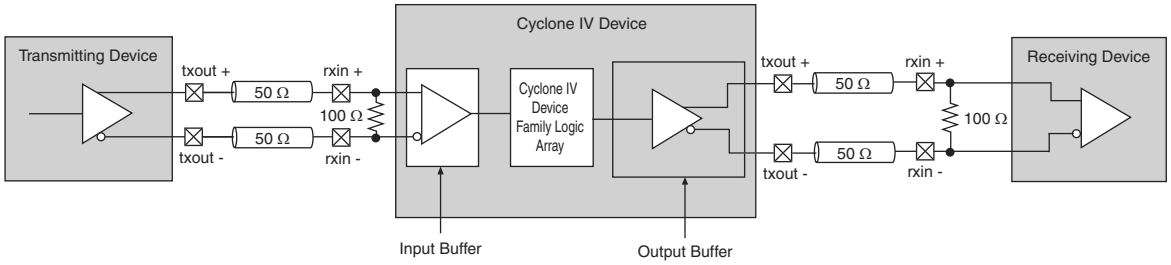

Figure 6–13 shows a point-to-point LVDS interface with Cyclone IV devices LVDS using two single-ended output buffers and external resistors.

Figure 6–13. LVDS Interface with External Resistor Network on the Top and Bottom I/O Banks *(1)*

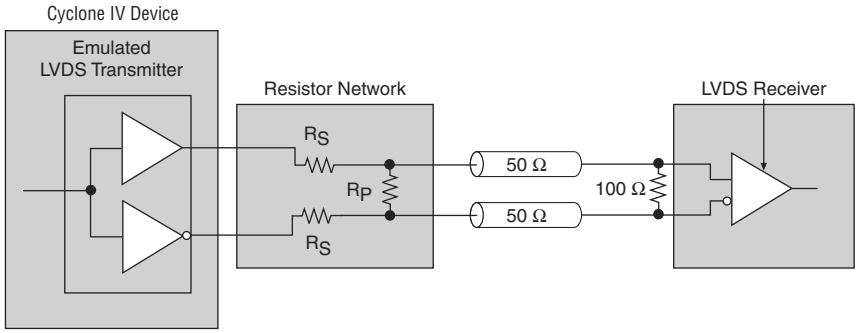

Note to Figure 6–13:

(1) R_S = 120 Ω. R_P = 170 Ω.

BLVDS I/O Standard Support in Cyclone IV Devices

The BLVDS I/O standard is a high-speed differential data transmission technology that extends the benefits of standard point-to-point LVDS to multipoint configuration that supports bidirectional half-duplex communication. BLVDS differs from standard LVDS by providing a higher drive to achieve similar signal swings at the receiver while loaded with two terminations at both ends of the bus.

Table 8–20. Dedicated Configuration Pins on the Cyclone IV Device (Part 4 of 4)

Pin Name	User Mode	Configuration Scheme	Pin Type	Description
DATA[7..2]	I/O	FPP, AP (2)	Inputs (FPP). Bidirectional (AP) (2)	In an AS or PS configuration scheme, DATA[7..2] function as user I/O pins during configuration, which means they are tri-stated. After FPP configuration, DATA[7..2] are available as user I/O pins and the state of these pin depends on the **Dual-Purpose Pin** settings. In an AP configuration scheme, for Cyclone IV E devices only, the byte-wide or word-wide configuration data is presented to the target Cyclone IV E device on DATA[7..0] or DATA[15..0], respectively. After AP configuration, DATA[7..2] are dedicated bidirectional pins with optional user control. (2)
DATA[15..8]	I/O	AP (2)	Bidirectional	Data inputs. Word-wide configuration data is presented to the target Cyclone IV E device on DATA[15..0]. In a PS, FPP, or AS configuration scheme, DATA[15:8] function as user I/O pins during configuration, which means they are tri stated. After AP configuration, DATA[15:8] are dedicated bidirectional pins with optional user control.
PADD[23..0]	I/O	AP (2)	Output	In AP mode, it is a 24-bit address bus from the Cyclone IV E device to the parallel flash. Connects to the A[24:1] bus on the Micron P30 or P33 flash.
nRESET	I/O	AP (2)	Output	Active-low reset output. Driving the nRESET pin low resets the parallel flash. Connects to the RST# pin on the Micron P30 or P33 flash.
nAVD	I/O	AP (2)	Output	Active-low address valid output. Driving the nAVD pin low during read or write operation indicates to the parallel flash that a valid address is present on the PADD[23..0] address bus. Connects to the ADV# pin on the Micron P30 or P33 flash.
nOE	I/O	AP (2)	Output	Active-low output enable to the parallel flash. During the read operation, driving the nOE pin low enables the parallel flash outputs (DATA[15..0]). Connects to the OE# pin on the Micron P30 or P33 flash.
nWE	I/O	AP (2)	Output	Active-low write enable to the parallel flash. During the write operation, driving the nWE pin low indicates to the parallel flash that data on the DATA[15..0] bus is valid. Connects to the WE# pin on the Micron P30 or P33 flash.

Note to Table 8–20:

(1) If you are accessing the EPCS device with the ALTASMI_PARALLEL megafunction or your own user logic in user mode, in the **Device and Pin Options** window of the Quartus II software, in the **Dual-Purpose Pins** category, select **Use as regular I/O** for this pin.

(2) The AP configuration scheme is for Cyclone IV E devices only.

When the byte serializer is enabled, the low-speed clock frequency is halved before feeding into the read clock of TX phase compensation FIFO. The low-speed clock is available in the FPGA fabric as `tx_clkout` port, which can be used in the FPGA fabric to send transmitter data and control signals.

Figure 1–33. Transmitter Only Datapath Clocking in Non-Bonded Channel Configuration

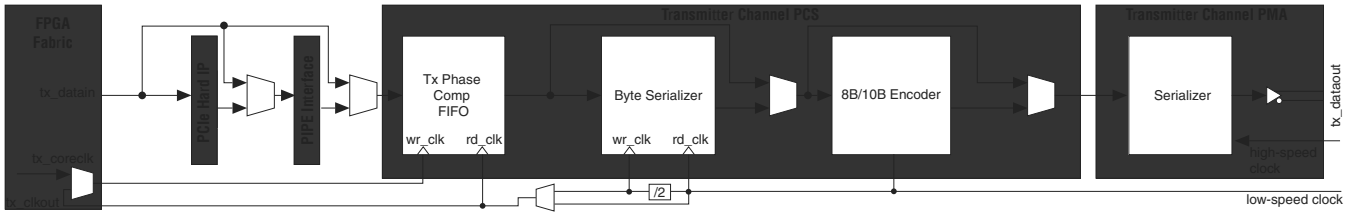

Figure 1–34 shows the datapath clocking in receiver only operation. In this mode, the receiver PCS supports configuration without the rate match FIFO. The CDR unit in the channel recovers the clock from the received serial data and generates the high-speed recovered clock for the deserializer, and low-speed recovered clock for forwarding to the receiver PCS. The low-speed recovered clock feeds to the following blocks in the receiver PCS:

- word aligner
- 8B/10B decoder
- write clock of byte deserializer
- byte ordering
- write clock of RX phase compensation FIFO

When the byte deserializer is enabled, the low-speed recovered clock frequency is halved before feeding into the write clock of the RX phase compensation FIFO. The low-speed recovered clock is available in the FPGA fabric as `rx_clkout` port, which can be used in the FPGA fabric to capture receiver data and status signals.

Figure 1–34. Receiver Only Datapath Clocking without Rate Match FIFO in Non-Bonded Channel Configuration

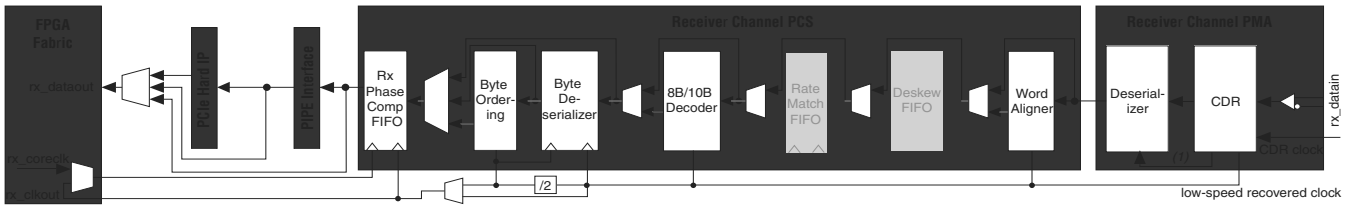

Note to Figure 1–34:

(1) High-speed recovered clock.

When the transceiver is configured for transmitter and receiver operation in non-bonded channel configuration, the receiver PCS supports configuration with and without the rate match FIFO. The difference is only at the receiver datapath clocking. The transmitter datapath clocking is identical to transmitter only operation mode as shown in Figure 1–33.

Figure 1–67 shows the transceiver configuration in Deterministic Latency mode.

Figure 1–67. Transceiver Configuration in Deterministic Latency Mode

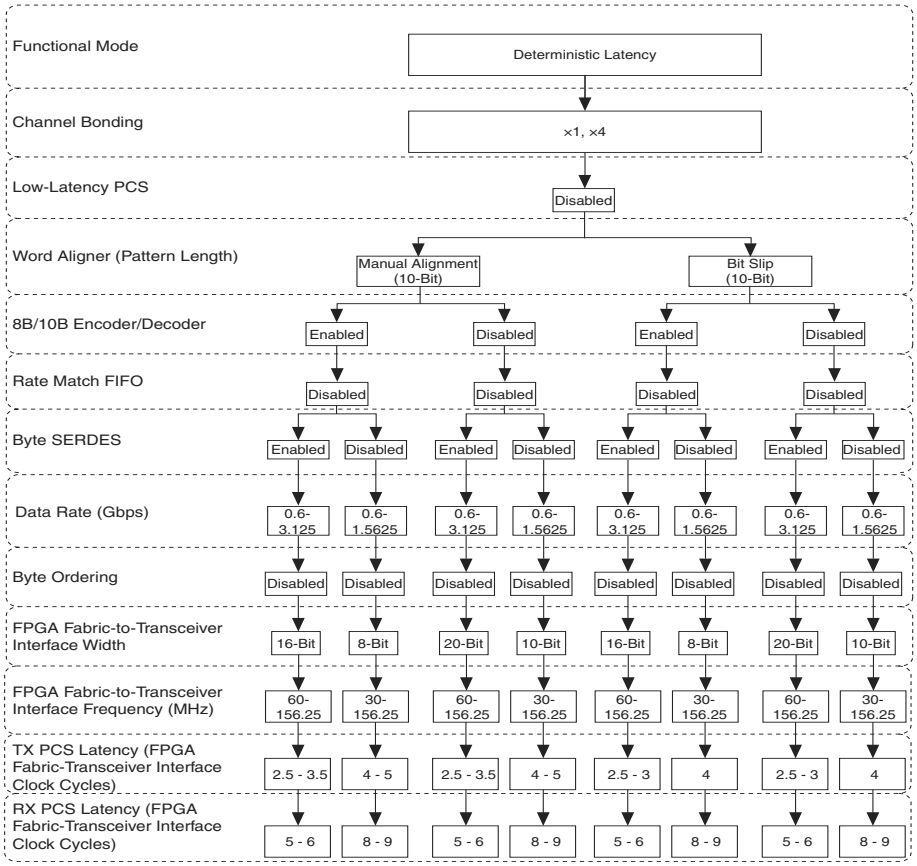

Both CPRI and OBSAI protocols define the serial interface connecting the base station component (specifically channel cards) and remote radio heads (specifically radio frequency cards) in a radio base station system with fiber optics. The protocols require the accuracy of round trip delay measurement for single-hop and multi-hop connections to be within ± 16.276 ns. The Cyclone IV GX transceivers support the following CPRI and OBSAI line rates using Deterministic Latency mode:

- CPRI —614.4 Mbps, 1.2288 Gbps, 2.4576 Gbps, and 3.072 Gbps
- OBSAI—768 Mbps, 1.536 Gbps, and 3.072 Gbps

For more information about deterministic latency implementation, refer to *AN 610: Implementing Deterministic Latency for CPRI and OBSAI Protocols in Stratix IV, HardCopy IV, Arria II GX, and Cyclone IV Devices*.

Registered Mode Phase Compensation FIFO

In Deterministic Latency mode, the RX phase compensation FIFO is set to registered mode while the TX phase compensation FIFO supports optional registered mode. When set into registered mode, the phase compensation FIFO acts as a register and eliminates the latency uncertainty through the FIFOs.

2. Cyclone IV Reset Control and Power Down

CYIV-52002-1.4

Cyclone® IV GX devices offer multiple reset signals to control transceiver channels independently. The ALTGX Transceiver MegaWizard™ Plug-In Manager provides individual reset signals for each channel instantiated in your design. It also provides one power-down signal for each transceiver block.

This chapter includes the following sections:

- "User Reset and Power-Down Signals" on page 2–2
- "Transceiver Reset Sequences" on page 2–4
- "Dynamic Reconfiguration Reset Sequences" on page 2–19
- "Power Down" on page 2–21
- "Simulation Requirements" on page 2–22
- "Reference Information" on page 2–23

Figure 2–1 shows the reset control and power-down block for a Cyclone IV GX device.

Figure 2–1. Reset Control and Power-Down Block

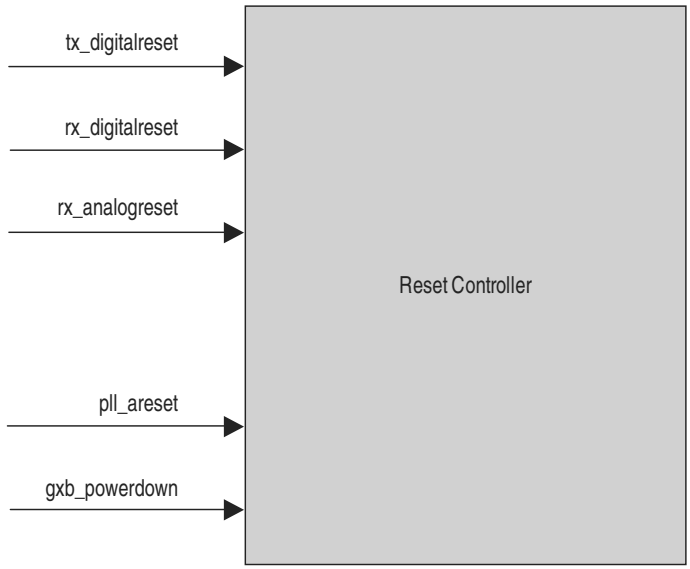

© 2014 Altera Corporation. All rights reserved. ALTERA, ARRIA, CYCLONE, HARDCOPY, MAX, MEGACORE, NIOS, QUARTUS and STRATIX words and logos are trademarks of Altera Corporation and registered in the U.S. Patent and Trademark Office and in other countries. All other words and logos identified as trademarks or service marks are the property of their respective holders as described at www.altera.com/common/legal.html. Altera warrants performance of its semiconductor products to current specifications in accordance with Altera's standard warranty, but reserves the right to make changes to any products and services at any time without notice. Altera assumes no responsibility or liability arising out of the application or use of any information, product, or service described herein except as expressly agreed to in writing by Altera. Altera customers are advised to obtain the latest version of device specifications before relying on any published information and before placing orders for products or services.

ISO 9001:2008 Registered