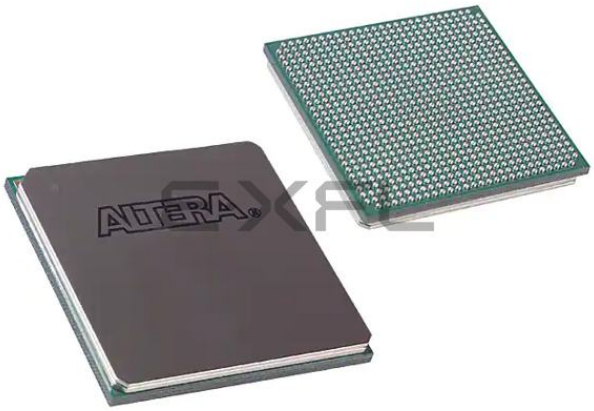

Welcome to E-XFL.COM

Understanding Embedded - FPGAs (Field Programmable Gate Array)

Embedded - FPGAs, or Field Programmable Gate Arrays, are advanced integrated circuits that offer unparalleled flexibility and performance for digital systems. Unlike traditional fixed-function logic devices, FPGAs can be programmed and reprogrammed to execute a wide array of logical operations, enabling customized functionality tailored to specific applications. This reprogrammability allows developers to iterate designs quickly and implement complex functions without the need for custom hardware.

Applications of Embedded - FPGAs

The versatility of Embedded - FPGAs makes them indispensable in numerous fields. In telecommunications.

Details	
Product Status	Active
Number of LABs/CLBs	4713
Number of Logic Elements/Cells	75408
Total RAM Bits	2810880
Number of I/O	426
Number of Gates	-
Voltage - Supply	0.97V ~ 1.03V
Mounting Type	Surface Mount
Operating Temperature	-40°C ~ 100°C (TJ)
Package / Case	780-BGA
Supplier Device Package	780-FBGA (29x29)
Purchase URL	https://www.e-xfl.com/product-detail/intel/ep4ce75f29i8l

Figure 2–1 shows the LEs for Cyclone IV devices.

Figure 2–1. Cyclone IV Device LEs

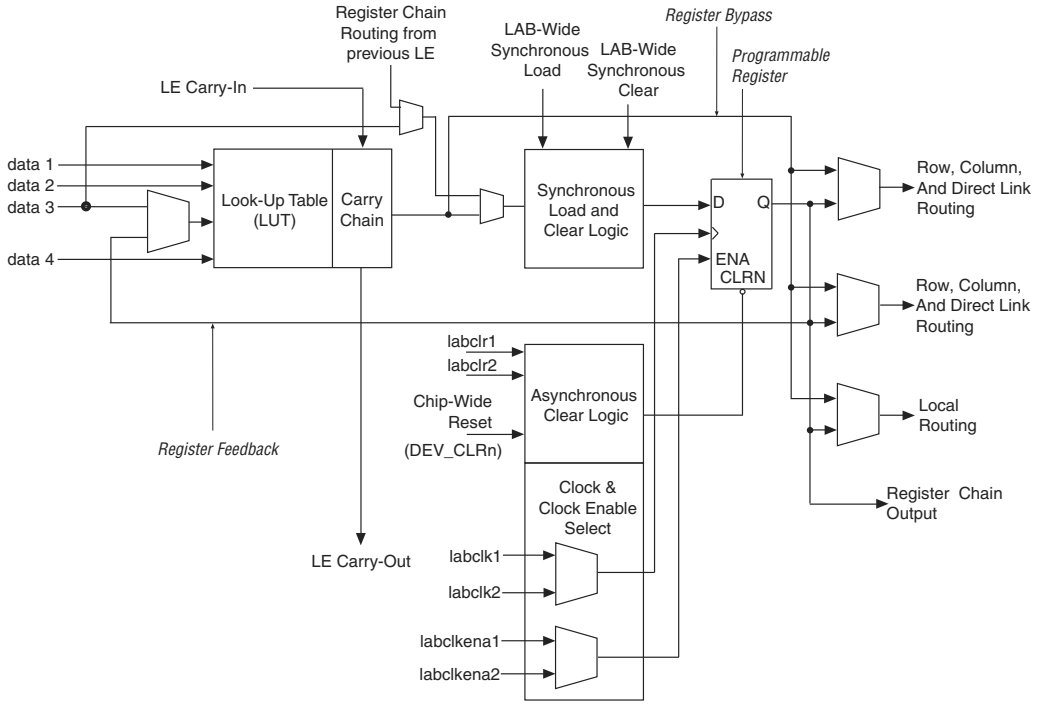

LE Features

You can configure the programmable register of each LE for D, T, JK, or SR flipflop operation. Each register has data, clock, clock enable, and clear inputs. Signals that use the global clock network, general-purpose I/O pins, or any internal logic can drive the clock and clear control signals of the register. Either general-purpose I/O pins or the internal logic can drive the clock enable. For combinational functions, the LUT output bypasses the register and drives directly to the LE outputs.

Each LE has three outputs that drive the local, row, and column routing resources. The LUT or register output independently drives these three outputs. Two LE outputs drive the column or row and direct link routing connections, while one LE drives the local interconnect resources. This allows the LUT to drive one output while the register drives another output. This feature, called register packing, improves device utilization because the device can use the register and the LUT for unrelated functions. The LAB-wide synchronous load control signal is not available when using register packing. For more information about the synchronous load control signal, refer to "LAB Control Signals" on page 2–6.

The register feedback mode allows the register output to feed back into the LUT of the same LE to ensure that the register is packed with its own fan-out LUT, providing another mechanism for improved fitting. The LE can also drive out registered and unregistered versions of the LUT output.

Figure 5–25 shows the scan chain bit order sequence for one PLL post-scale counter in PLLs of Cyclone IV devices.

Figure 5–25. Scan Chain Bit Order

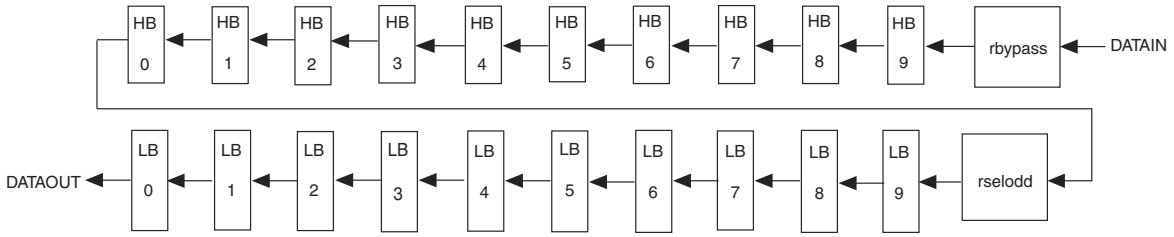

Charge Pump and Loop Filter

You can reconfigure the charge pump and loop filter settings to update the PLL bandwidth in real time. Table 5–8 through Table 5–10 list the possible settings for charge pump current (I_{CP}), loop filter resistor (R), and capacitor (C) values for PLLs of Cyclone IV devices.

Table 5–8. Charge Pump Bit Control

CP[2]	CP[1]	CP[0]	Setting (Decimal)
0	0	0	0
1	0	0	1
1	1	0	3
1	1	1	7

Table 5–9. Loop Filter Resistor Value Control

LFR[4]	LFR[3]	LFR[2]	LFR[1]	LFR[0]	Setting (Decimal)
0	0	0	0	0	0
0	0	0	1	1	3
0	0	1	0	0	4
0	1	0	0	0	8
1	0	0	0	0	16
1	0	0	1	1	19
1	0	1	0	0	20
1	1	0	0	0	24
1	1	0	1	1	27
1	1	1	0	0	28
1	1	1	1	0	30

Table 6–3. Cyclone IV Devices Supported I/O Standards and Constraints (Part 2 of 3)

I/O Standard	Type	Standard Support	V_{CCIO} Level (in V)		Column I/O Pins			Row I/O Pins (1)	
			Input	Output	CLK, DQS	PLL_OUT	User I/O Pins	CLK, DQS	User I/O Pins
2.5-V LVTTL / LVCMOS	Single-ended	JESD8-5	3.3/3.0/2.5 (3)	2.5	✓	✓	✓	✓	✓
1.8-V LVTTL / LVCMOS	Single-ended	JESD8-7	1.8/1.5 (3)	1.8	✓	✓	✓	✓	✓
1.5-V LVCMOS	Single-ended	JESD8-11	1.8/1.5 (3)	1.5	✓	✓	✓	✓	✓
1.2-V LVCMOS (4)	Single-ended	JESD8-12A	1.2	1.2	✓	✓	✓	✓	✓
SSTL-2 Class I, SSTL-2 Class II	voltage-referenced	JESD8-9A	2.5	2.5	✓	✓	✓	✓	✓
SSTL-18 Class I, SSTL-18 Class II	voltage-referenced	JESD815	1.8	1.8	✓	✓	✓	✓	✓
HSTL-18 Class I, HSTL-18 Class II	voltage-referenced	JESD8-6	1.8	1.8	✓	✓	✓	✓	✓
HSTL-15 Class I, HSTL-15 Class II	voltage-referenced	JESD8-6	1.5	1.5	✓	✓	✓	✓	✓
HSTL-12 Class I	voltage-referenced	JESD8-16A	1.2	1.2	✓	✓	✓	✓	✓
HSTL-12 Class II (9)	voltage-referenced	JESD8-16A	1.2	1.2	✓	✓	✓	—	—
PCI and PCI-X	Single-ended	—	3.0	3.0	✓	✓	✓	✓	✓
Differential SSTL-2 Class I or Class II	Differential (5)	JESD8-9A	—	2.5	—	✓	—	—	—
			2.5	—	✓	—	—	✓	—
Differential SSTL-18 Class I or Class II	Differential (5)	JESD815	—	1.8	—	✓	—	—	—
			1.8	—	✓	—	—	✓	—
Differential HSTL-18 Class I or Class II	Differential (5)	JESD8-6	—	1.8	—	✓	—	—	—
			1.8	—	✓	—	—	✓	—
Differential HSTL-15 Class I or Class II	Differential (5)	JESD8-6	—	1.5	—	✓	—	—	—
			1.5	—	✓	—	—	✓	—
Differential HSTL-12 Class I or Class II	Differential (5)	JESD8-16A	—	1.2	—	✓	—	—	—
			1.2	—	✓	—	—	✓	—
PPDS (6)	Differential	—	—	2.5	—	✓	✓	—	✓
LVDS (10)	Differential	ANSI/TIA/EIA-644	2.5	2.5	✓	✓	✓	✓	✓
RSDS and mini-LVDS (6)	Differential	—	—	2.5	—	✓	✓	—	✓
BLVDS (8)	Differential	—	2.5	2.5	—	—	✓	—	✓

Figure 7–9 illustrates how the second output enable register extends the DQS high-impedance state by half a clock cycle during a write operation.

Figure 7–9. Extending the OE Disable by Half a Clock Cycle for a Write Transaction *(1)*

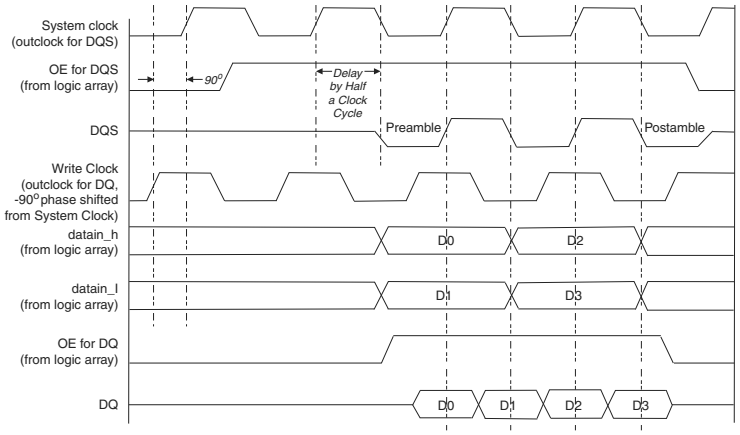

Note to Figure 7–9:

(1) The waveform reflects the software simulation result. The OE signal is an active low on the device. However, the Quartus II software implements the signal as an active high and automatically adds an inverter before the A_{OE} register D input.

OCT with Calibration

Cyclone IV devices support calibrated on-chip series termination (R_S OCT) in both vertical and horizontal I/O banks. To use the calibrated OCT, you must use the RUP and RDN pins for each R_S OCT control block (one for each side). You can use each OCT calibration block to calibrate one type of termination with the same V_{CCIO} for that given side.

For more information about the Cyclone IV devices OCT calibration block, refer to the *Cyclone IV Device I/O Features* chapter.

PLL

When interfacing with external memory, the PLL is used to generate the memory system clock, the write clock, the capture clock and the logic-core clock. The system clock generates the DQS write signals, commands, and addresses. The write-clock is shifted by -90° from the system clock and generates the DQ signals during writes. You can use the PLL reconfiguration feature to calibrate the read-capture phase shift to balance the setup and hold margins.

The PLL is instantiated in the ALTMEMPHY megafunction. All outputs of the PLL are used when the ALTMEMPHY megafunction is instantiated to interface with external memories. PLL reconfiguration is used in the ALTMEMPHY megafunction to calibrate and track the read-capture phase to maintain the optimum margin.

For more information about usage of PLL outputs by the ALTMEMPHY megafunction, refer to the *External Memory Interface Handbook*.

You can perform JTAG testing on Cyclone IV devices before, during, and after configuration. Cyclone IV devices support the BYPASS, IDCODE, and SAMPLE instructions during configuration without interrupting configuration. All other JTAG instructions can only be issued by first interrupting configuration and reprogramming I/O pins with the ACTIVE_DISENGAGE and CONFIG_IO instructions.

The CONFIG_IO instruction allows you to configure the I/O buffers through the JTAG port and interrupts configuration when issued after the ACTIVE_DISENGAGE instruction. This instruction allows you to perform board-level testing prior to configuring the Cyclone IV device or waiting for a configuration device to complete configuration. Prior to issuing the CONFIG_IO instruction, you must issue the ACTIVE_DISENGAGE instruction. This is because in Cyclone IV devices, the CONFIG_IO instruction does not hold nSTATUS low until reconfiguration, so you must disengage the active configuration mode controller when active configuration is interrupted. The ACTIVE_DISENGAGE instruction places the active configuration mode controllers in an idle state prior to JTAG programming. Additionally, the ACTIVE_ENGAGE instruction allows you to re-engage a disengaged active configuration mode controller.

☞ You must follow a specific flow when executing the ACTIVE_DISENGAGE, CONFIG_IO, and ACTIVE_ENGAGE JTAG instructions in Cyclone IV devices.

The chip-wide reset (DEV_CLRn) and chip-wide output enable (DEV_OE) pins in Cyclone IV devices do not affect JTAG boundary-scan or programming operations. Toggling these pins do not affect JTAG operations (other than the usual boundary-scan operation).

When designing a board for JTAG configuration of Cyclone IV devices, consider the dedicated configuration pins. Table 8–15 describes how you must connect these pins during JTAG configuration.

Table 8–15. Dedicated Configuration Pin Connections During JTAG Configuration

Signal	Description
nCE	On all Cyclone IV devices in the chain, nCE must be driven low by connecting it to GND, pulling it low through a resistor, or driving it by some control circuitry. For devices that are also in multi-device AS, AP, PS, or FPP configuration chains, you must connect the nCE pins to GND during JTAG configuration or JTAG configured in the same order as the configuration chain.
nCEO	On all Cyclone IV devices in the chain, nCEO is left floating or connected to the nCE of the next device.
MSEL	These pins must not be left floating. These pins support whichever non-JTAG configuration that you used in production. If you only use JTAG configuration, tie these pins to GND.
nCONFIG	Driven high by connecting to the V_{CCIO} supply of the bank in which the pin resides and pulling up through a resistor or driven high by some control circuitry.
nSTATUS	Pull to the V_{CCIO} supply of the bank in which the pin resides through a 10-kΩ resistor. When configuring multiple devices in the same JTAG chain, each nSTATUS pin must be pulled up to the V_{CCIO} individually.
CONF_DONE	Pull to the V_{CCIO} supply of the bank in which the pin resides through a 10-kΩ resistor. When configuring multiple devices in the same JTAG chain, each CONF_DONE pin must be pulled up to V_{CCIO} supply of the bank in which the pin resides individually. CONF_DONE going high at the end of JTAG configuration indicates successful configuration.
DCLK	Must not be left floating. Drive low or high, whichever is more convenient on your board.

Configuration error detection determines if the configuration data received through an external memory device is corrupted during configuration. To validate the configuration data, the Quartus® II software uses a function to calculate the CRC value for each configuration data frame and stores the frame-based CRC value in the configuration data as part of the configuration bit stream.

During configuration, Cyclone IV devices use the same methodology to calculate the CRC value based on the frame of data that is received and compares it against the frame CRC value in the data stream. Configuration continues until either the device detects an error or all the values are calculated.

In addition to the frame-based CRC value, the Quartus II software generates a 32-bit CRC value for the whole configuration bit stream. This 32-bit CRC value is stored in the 32-bit storage register at the end of the configuration and is used for user mode error detection that is discussed in "User Mode Error Detection".

User Mode Error Detection

☞ User mode error detection is available in Cyclone IV GX and Cyclone IV E devices with 1.2-V core voltage. Cyclone IV E devices with 1.0-V core voltage do not support user mode error detection.

Soft errors are changes in a configuration random-access memory (CRAM) bit state due to an ionizing particle. Cyclone IV devices have built-in error detection circuitry to detect data corruption by soft errors in the CRAM cells.

This error detection capability continuously computes the CRC of the configured CRAM bits based on the contents of the device and compares it with the pre-calculated CRC value obtained at the end of the configuration. If the CRCs match, there is no error in the current configuration CRAM bits. The process of error detection continues until the device is reset (by setting `nCONFIG` to low).

The Cyclone IV device error detection feature does not check memory blocks and I/O buffers. These device memory blocks support parity bits that are used to check the contents of memory blocks for any error. The I/O buffers are not verified during error detection because the configuration data uses flip-flops as storage elements that are more resistant to soft errors. Similar flip-flops are used to store the pre-calculated CRC and other error detection circuitry option bits.

The error detection circuitry in Cyclone IV devices uses a 32-bit CRC IEEE 802 standard and a 32-bit polynomial as the CRC generator. Therefore, a single 32-bit CRC calculation is performed by the device. If a soft error does not occur, the resulting 32-bit signature value is `0x00000000`, that results in a `0` on the `CRC_ERROR` output signal. If a soft error occurs in the device, the resulting signature value is non-zero and the `CRC_ERROR` output signal is `1`.

You can inject a soft error by changing the 32-bit CRC storage register in the CRC circuitry. After verifying the induced failure, you can restore the 32-bit CRC value to the correct CRC value with the same instruction and inserting the correct value.

☞ Before updating it with a known bad value, Altera recommends reading out the correct value.

Chapter Revision Dates

The chapters in this document, Cyclone IV Device Handbook, were revised on the following dates. Where chapters or groups of chapters are available separately, part numbers are listed.

Chapter 1. Cyclone IV Transceivers Architecture
Revised: *February 2015*
Part Number: *CYIV-52001-3.7*

Chapter 2. Cyclone IV Reset Control and Power Down
Revised: *September 2014*
Part Number: *CYIV-52002-1.4*

Chapter 3. Cyclone IV Dynamic Reconfiguration
Revised: *November 2011*
Part Number: *CYIV-52003-2.1*

Additional Information

This chapter provides additional information about the document and Altera.

About this Handbook

This handbook provides comprehensive information about the Altera® Cyclone® IV

at time $n + 2$ is encoded as a positive disparity code group. In the same example, the current running disparity at time $n + 5$ indicates that the K28.5 in time $n + 6$ should be encoded with a positive disparity. Because `tx_forcedisp` is high at time $n + 6$, and `tx_dispval` is high, the K28.5 at time $n + 6$ is encoded as a negative disparity code group.

Miscellaneous Transmitter PCS Features

The transmitter PCS supports the following additional features:

- Polarity inversion—corrects accidentally swapped positive and negative signals from the serial differential link during board layout by inverting the polarity of each bit. An optional `tx_invpolarity` port is available to dynamically invert the polarity of every bit of the 8-bit or 10-bit input data to the serializer in the transmitter datapath. Figure 1–9 shows the transmitter polarity inversion feature.

Figure 1–9. Transmitter Polarity Inversion

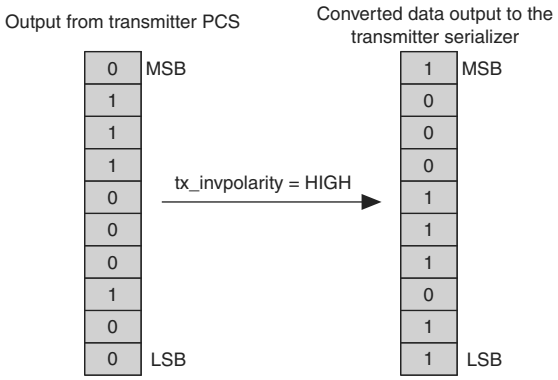

`tx_invpolarity` is a dynamic signal and might cause initial disparity errors at the receiver of an 8B/10B encoded link. The downstream system must be able to tolerate these disparity errors.

Transmitter Output Buffer

Figure 1–11 shows the transmitter output buffer block diagram.

Figure 1–11. Transmitter Output Buffer Block Diagram

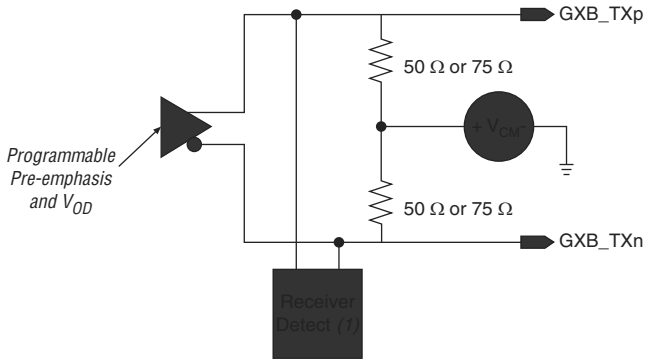

Note to Figure 1–11:

(1) Receiver detect function is specific for PCIe protocol implementation only. For more information, refer to "PCI Express (PIPE) Mode" on page 1–52.

The Cyclone IV GX transmitter output buffers support the **1.5-V PCML** I/O standard and are powered by `VCCH_GXB` power pins with 2.5-V supply. The 2.5-V supply on `VCCH_GXB` pins are regulated internally to 1.5-V for the transmitter output buffers. The transmitter output buffers support the following additional features:

- Programmable differential output voltage (V_{OD})—customizes the V_{OD} up to 1200 mV to handle different trace lengths, various backplanes, and various receiver requirements.
- Programmable pre-emphasis—boosts high-frequency components in the transmitted signal to maximize the data eye opening at the far-end. The high-frequency components might be attenuated in the transmission media due to data-dependent jitter and intersymbol interference (ISI) effects. The requirement for pre-emphasis increases as the data rates through legacy backplanes increase.
- Programmable differential on-chip termination (OCT)—provides calibrated OCT at differential 100 Ω or 150 Ω with on-chip transmitter common mode voltage (V_{CM}) at 0.65 V. V_{CM} is tri-stated when you disable the OCT to use external termination.

Disable OCT to use external termination if the link requires a 85 Ω termination, such as when you are interfacing with certain PCIe Gen1 or Gen2 capable devices.

The Cyclone IV GX transmitter output buffers are current-mode drivers. The resulting V_{OD} voltage is therefore a function of the transmitter termination value. For lists of supported V_{OD} settings, refer to the *Cyclone IV Device Data Sheet*.