Welcome to E-XFL.COM

What is "Embedded - Microcontrollers"?

"Embedded - Microcontrollers" refer to small, integrated circuits designed to perform specific tasks within larger systems. These microcontrollers are essentially compact computers on a single chip, containing a processor core, memory, and programmable input/output peripherals. They are called "embedded" because they are embedded within electronic devices to control various functions, rather than serving as standalone computers. Microcontrollers are crucial in modern electronics, providing the intelligence and control needed for a wide range of applications.

Applications of "Embedded - Microcontrollers"

Details	
Product Status	Active
Core Processor	eZ8
Core Size	8-Bit
Speed	20MHz
Connectivity	-
Peripherals	Brown-out Detect/Reset, LED, POR, PWM, WDT
Number of I/O	25
Program Memory Size	12KB (12K x 8)
Program Memory Type	FLASH
EEPROM Size	-
RAM Size	256 x 8
Voltage - Supply (Vcc/Vdd)	2.7V ~ 3.6V
Data Converters	-
Oscillator Type	Internal
Operating Temperature	0°C ~ 70°C (TA)
Mounting Type	Surface Mount
Package / Case	28-SOIC (0.295", 7.50mm Width)
Supplier Device Package	-
Purchase URL	https://www.e-xfl.com/product-detail/zilog/z8f1233sj020sg

LED Drive Level Low Register

The LED Drive Level Low Register, shown in Table 33, contains two control bits for each Port C pin. These two bits select one of four programmable current drive levels for each Port C pin. Each pin is individually programmable.

Table 33. LED Drive Level Low Register (LEDLVLL)

Bit	7	6	5	4	3	2	1	0
Field	LEDLVLL[7:0]							
RESET	0	0	0	0	0	0	0	0
R/W	R/W	R/W	R/W	R/W	R/W	R/W	R/W	R/W
Address	F84H							

Bit	Description
[7:0] LEDLVLL	LED Level Low Bits {LEDLVLH, LEDLVLL} select one of four programmable current drive levels for each Port C pin. 00 = 3mA. 01 = 7mA. 10 = 13mA. 11 = 20mA.

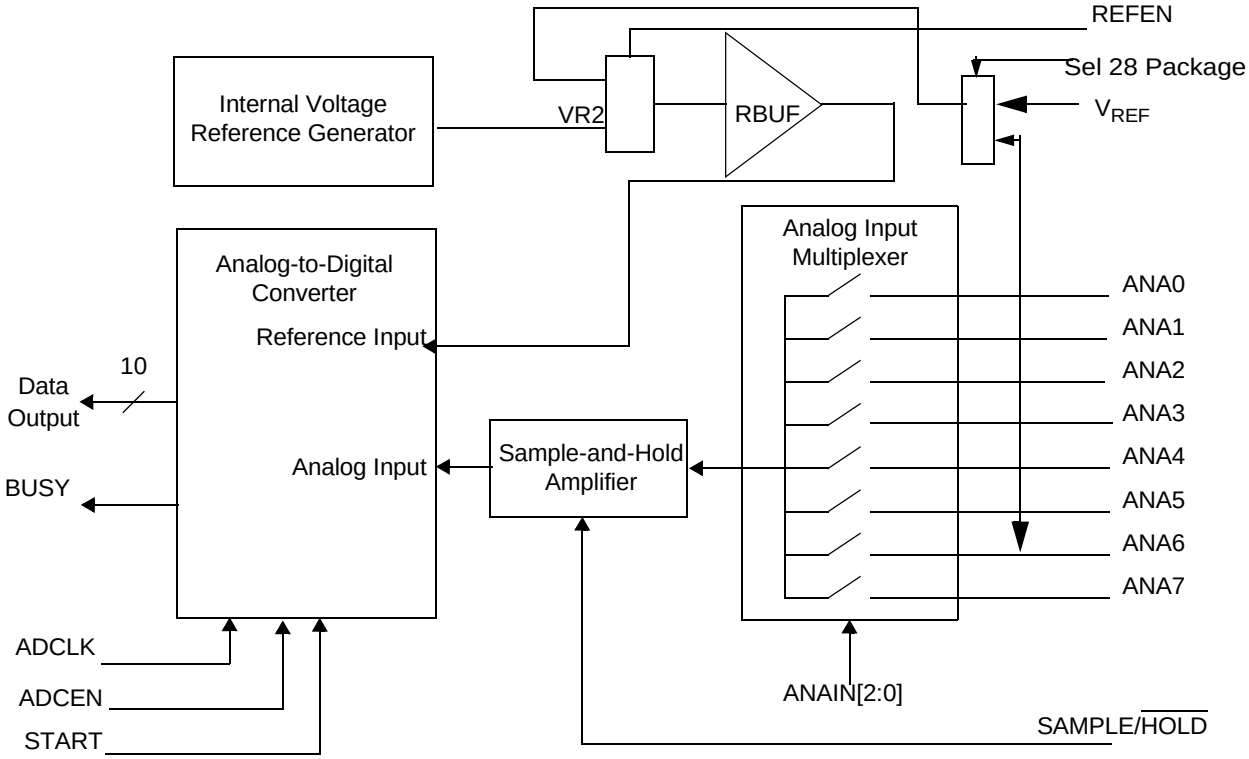

Figure 11. Analog-to-Digital Converter Block Diagram

Operation

The ADC converts the analog input, ANA_X, to a 10-bit digital representation. The equation for calculating the digital value is represented by:

$$ADCOutput = 1024u\ ANA_X\ yV_{REF}$$

Assuming zero gain and offset errors, any voltage outside the ADC input limits of AV_{SS} and V_{REF} returns all 0s or 1s, respectively. A new conversion can be initiated by a software to the ADC Control Register s start bit.

Initiating a new conversion, stops any conversion currently in progress and begins a new conversion. To avoid disrupting a conversion already in progress, the START bit can be read to determine ADC operation status (busy or available).

Runtime Counter

The OCD contains a 16-bit runtime counter. It counts system clock cycles between breakpoints. The counter starts counting when the OCD leaves DEBUG Mode and stops counting when it enters DEBUG Mode again or when it reaches the maximum count of *FFFFH*.

On-Chip Debugger Commands

The host communicates to the On-Chip Debugger by sending OCD commands using the DBG interface. During normal operation, only a subset of the OCD commands are available. In DEBUG Mode, all OCD commands become available unless the user code and control registers are protected by programming the Flash read protect option bit (FRP). The FRP prevents the code memory from being read out of the Z8 Encore! F0830 Series products. When this option is enabled, several of the OCD commands are disabled.

Table 95 summarizes the On-Chip Debugger commands. This table indicates the commands that operate when the device is not in DEBUG Mode (normal operation) and the commands that are disabled by programming the FRP.

Table 95. On-Chip Debugger Command Summary

Debug Command	Command Byte	Enabled when not in DEBUG Mode?	Disabled by Flash Read Protect Option Bit
Read OCD Revision	00H	Yes	–
Reserved	01H	–	–
Read OCD Status Register	02H	Yes	–
Read Runtime Counter	03H	–	–
Write OCD Control Register	04H	Yes	Cannot clear DBGMODE bit
Read OCD Control Register	05H	Yes	–
Write Program Counter	06H	–	Disabled
Read Program Counter	07H	–	Disabled
Write Register	08H	–	Only writes of the Flash Memory Control registers are allowed. Additionally, only the Mass Erase command is allowed to be written to the Flash Control register.
Read Register	09H	–	Disabled
Write Program Memory	0AH	–	Disabled
Read Program Memory	0BH	–	Disabled
Write Data Memory	0CH	–	Yes
Read Data Memory	0DH	–	–

Table 95. On-Chip Debugger Command Summary (Continued)

Debug Command	Command Byte	Enabled when not in DEBUG Mode?	Disabled by Flash Read Protect Option Bit
Read Program Memory CRC	0EH	–	–
Reserved	0FH	–	–
Step Instruction	10H	–	Disabled
Stuff Instruction	11H	–	Disabled
Execute Instruction	12H	–	Disabled
Reserved	13H–FFH	–	–

In the following bulleted list of OCD commands, data and commands sent from the host to the OCD are identified by DBG 8 Command/Data . Data sent from the OCD back to the host is identified by DBG Data .

Read OCD Revision (00H). The read OCD revision command determines the version of the On-Chip Debugger. If OCD commands are added, removed or changed this revision number changes.

```
DBG 8 00H
DBG : OCDRev[15:8] (Major revision number)
DBG : OCDRev[7:0] (Minor revision number)
```

Read OCD Status Register (02H). The read OCD Status Register command reads the OCDSTAT register.

```
DBG 8 02H
DBG : OCDSTAT[7:0]
```

Read Runtime Counter (03H). The runtime counter counts system clock cycles in between breakpoints. The 16-bit runtime counter counts from 0000H and stops at the maximum count of FFFFH. The runtime counter is overwritten during the write memory, read memory, write register, read register, read memory CRC, step instruction, stuff instruction and execute instruction commands.

```
DBG 8 03H
DBG : RuntimeCounter[15:8]
DBG : RuntimeCounter[7:0]
```

Write OCD Control Register (04H). The write OCD Control Register command writes the data that follows to the OCDCTL register. When the Flash read protect option bit is enabled, the DBGMODE bit (OCDCTL[7]) can only be set to 1, it cannot be cleared to 0. To return the device to normal operating mode, the device must be reset.

```
DBG 8 04H
DBG 8 OCDCTL[7:0]
```

ister, the user code must wait at least 5000 IPO cycles for the crystal to stabilize. After this period, the crystal oscillator may be selected as the system clock.

Figure 25 displays a recommended configuration for connection with an external fundamental-mode, parallel-resonant crystal operating at 20 MHz. Recommended 20 MHz crystal specifications are provided in Table 100. Resistor R_1 is optional and limits total power dissipation by the crystal. Printed circuit board layout must add no more than 4 pF of stray capacitance to either the X_{IN} or X_{OUT} pins. If oscillation does not occur, reduce the values of capacitors C_1 and C_2 to decrease loading.

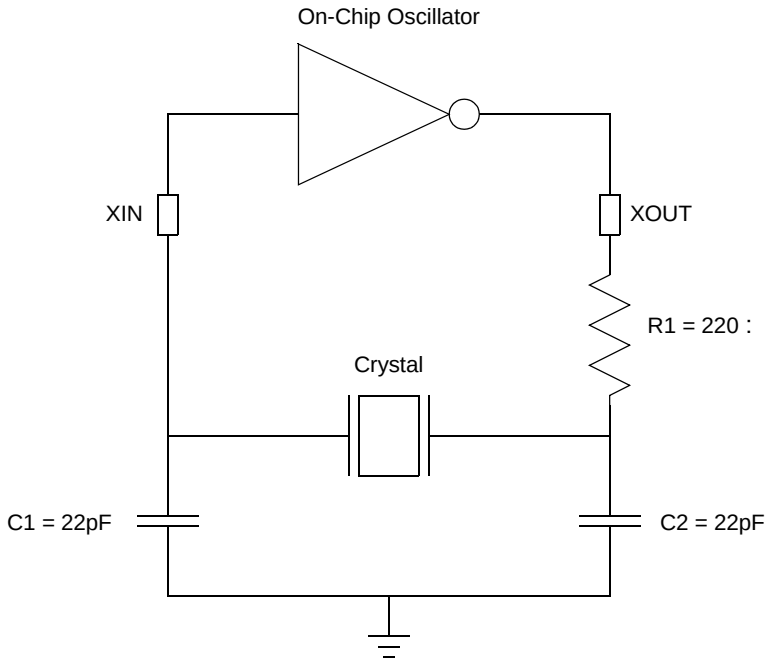

Figure 25. Recommended 20 MHz Crystal Oscillator Configuration

Table 100. Recommended Crystal Oscillator Specifications

Parameter	Value	Units	Comments
Frequency	20	MHz	
Resonance	Parallel		
Mode	Fundamental		
Series Resistance (R_S)	60	:	Maximum
Load Capacitance (C_L)	30	pF	Maximum
Shunt Capacitance (C_0)	7	pF	Maximum
Drive Level	1	mW	Maximum

Table 113. eZ8 CPU Instruction Summary (Continued)

Assembly Mnemonic	Symbolic Operation	Address Mode dst	Address Mode src	Op Code(s) (Hex)	Flags C	Flags Z	Flags S	Flags V	Flags D	Flags H	Fetch Cycles	Instr. Cycles
TM dst, src	dst AND src	r	r	72	–	*	*	0	–	–	2	3
		r	Ir	73							2	4
		R	R	74							3	3
		R	IR	75							3	4
		R	IM	76							3	3
		IR	IM	77							3	4
TMX dst, src	dst AND src	ER	ER	78	–	*	*	0	–	–	4	3
		ER	IM	79							4	3
TRAP Vector	SP 8 SP – 2 @SP 8 PC SP 8 SP – 1 @SP 8 FLAGS PC 8 @Vector		Vec-tor	F2	–	–	–	–	–	–	2	6
WDT				5F	–	–	–	–	–	–	1	2
XOR dst, src	dst 8 dst XOR src	r	r	B2	–	*	*	0	–	–	2	3
		r	Ir	B3							2	4
		R	R	B4							3	3
		R	IR	B5							3	4
		R	IM	B6							3	3
		IR	IM	B7							3	4
XORX dst, src	dst 8 dst XOR src	ER	ER	B8	–	*	*	0	–	–	4	3
		ER	IM	B9							4	3

Note: Flags Notation:
* = Value is a function of the result of the operation.
– = Unaffected.
X = Undefined.
0 = Reset to 0.
1 = Set to 1.

Table 114. Op Code Map Abbreviations

Abbreviation	Description	Abbreviation	Description
b	Bit position	IRR	Indirect Register Pair
cc	Condition code	p	Polarity (0 or 1)
X	8-bit signed index or displacement	r	4-bit Working Register
DA	Destination address	R	8-bit register
ER	Extended Addressing Register	r1, R1, Ir1, Irr1, IR1, rr1, RR1, IRR1, ER1	Destination address
IM	Immediate data value	r2, R2, Ir2, Irr2, IR2, rr2, RR2, IRR2, ER2	Source address
Ir	Indirect Working Register	RA	Relative
IR	Indirect Register	rr	Working Register Pair
Irr	Indirect Working Register Pair	RR	Register Pair

Table 129 lists the pin count by package.

Table 129. Package and Pin Count Description

	Pin Count		
Package	20	28	
PDIP		¥	¥
QFN		¥	¥
SOIC		¥	¥
SSOP		¥	¥