Welcome to E-XFL.COM

Understanding Embedded - FPGAs (Field Programmable Gate Array)

Embedded - FPGAs, or Field Programmable Gate Arrays, are advanced integrated circuits that offer unparalleled flexibility and performance for digital systems. Unlike traditional fixed-function logic devices, FPGAs can be programmed and reprogrammed to execute a wide array of logical operations, enabling customized functionality tailored to specific applications. This reprogrammability allows developers to iterate designs quickly and implement complex functions without the need for custom hardware.

Applications of Embedded - FPGAs

The versatility of Embedded - FPGAs makes them indispensable in numerous fields. In telecommunications.

Details	
Product Status	Obsolete
Number of LABs/CLBs	32256
Number of Logic Elements/Cells	-
Total RAM Bits	294912
Number of I/O	684
Number of Gates	2000000
Voltage - Supply	1.425V ~ 1.575V
Mounting Type	Surface Mount
Operating Temperature	0°C ~ 70°C (TA)
Package / Case	1152-BGA
Supplier Device Package	1152-FPBGA (35x35)
Purchase URL	https://www.e-xfl.com/product-detail/microsemi/ax2000-fgg1152

R-Cell

Introduction

The R-cell, the sequential logic resource of the Axcelerator devices, is the second logic module type in the AX family architecture. It includes clock inputs for all eight global resources of the Axcelerator architecture as well as global presets and clears (Figure 2-31).

The main features of the R-cell include the following:

- Direct connection to the adjacent logic module through the hardwired connection DCIN. DCIN is driven by the DCOUT of an adjacent C-cell via the Direct-Connect routing resource, providing a connection with less than 0.1 ns of routing delay.
- The R-cell can be used as a standalone flip-flop. It can be driven by any C-cell or I/O modules through the regular routing structure (using DIN as a routable data input). This gives the option of using the R-Cell as a 2:1 MUXed flip-flop as well.
- Provision of data enable-input (S0).
- Independent active-low asynchronous clear (CLR).
- Independent active-low asynchronous preset (PSET). If both CLR and PSET are low, CLR has higher priority.
- Clock can be driven by any of the following (CKP selects clock polarity):
  - One of the four high performance hardwired fast clocks (HCLKs)
  - One of the four routed clocks (CLKs)
  - User signals
- Global power-on clear (GCLR) and preset (GPSET), which drive each flip-flop on a chip-wide basis.
  - When the Global Set Fuse option in the Designer software is unchecked (by default), GCLR = 0 and GPSET = 1 at device power-up. When the option is checked, GCLR = 1 and GPSET = 0. Both pins are pulled High when the device is in user mode. Refer to the "Simulation Support for GCLR/GPSET in Axcelerator" section of the Antifuse Macro Library Guide for information on simulation support for GCLR and GPSET.
- S0, S1, PSET, and CLR can be driven by routed clocks CLKE/F/G/H or user signals.
- DIN and S1 can be driven by user signals.

As with the C-cell, the configuration of the R-cell to perform various functions is handled automatically for the user through Microsemi's extensive macro library (see the Antifuse Macro Library Guide for a complete listing of available AX macros).

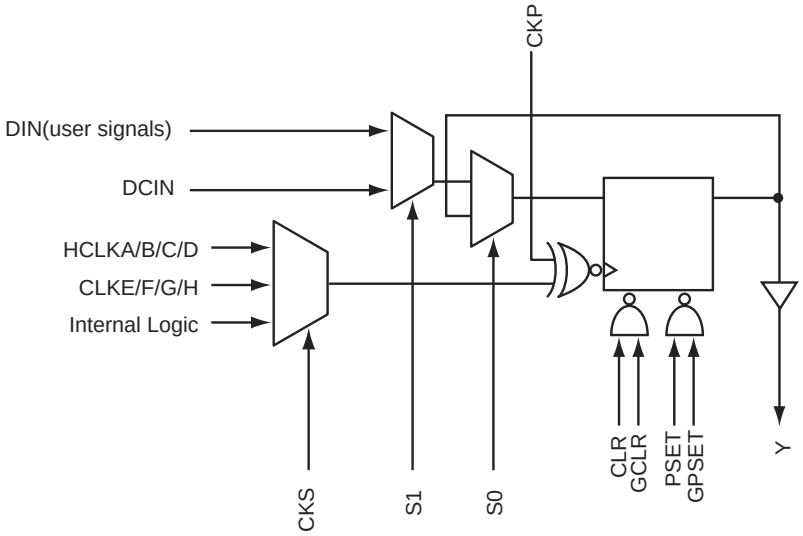

Figure 2-31 • R-Cell

FG324	
AX125 Function	Pin Number
IO50NB4F4/CLKFN	U9
IO50PB4F4/CLKFP	U10
Bank 5	
IO51NB5F5/CLKGN	R8
IO51PB5F5/CLKGP	R9
IO52NB5F5/CLKHN	T7
IO52PB5F5/CLKHP	T8
IO53NB5F5	U6
IO53PB5F5	U7
IO54NB5F5	V8
IO54PB5F5	V9
IO55NB5F5	V6
IO55PB5F5	V7
IO56NB5F5	U4
IO56PB5F5	U5
IO57NB5F5	T4
IO57PB5F5	T5
IO58NB5F5	V4
IO58PB5F5	V5
IO59NB5F5	V2
IO59PB5F5	V3
Bank 6	
IO60NB6F6	P5
IO60PB6F6	P6
IO61NB6F6	T2
IO61PB6F6	U3
IO62NB6F6	T1
IO62PB6F6	U1
IO63NB6F6	P1
IO63PB6F6	R1
IO64NB6F6	R3
IO64PB6F6	P3
IO65NB6F6	P2
IO65PB6F6	R2
IO66NB6F6	M3

FG324	
AX125 Function	Pin Number
IO66PB6F6	N3
IO67NB6F6	M2
IO67PB6F6	N2
IO68NB6F6	M1
IO68PB6F6	N1
IO69NB6F6	K4
IO69PB6F6	L4
IO70NB6F6	K1
IO70PB6F6	L1
IO71NB6F6	K3
IO71PB6F6	L3
Bank 7	
IO72NB7F7	H4
IO72PB7F7	J4
IO73NB7F7	K2
IO73PB7F7	L2
IO74NB7F7	H2
IO74PB7F7	H1
IO75NB7F7	H3
IO75PB7F7	J3
IO76NB7F7	F2
IO76PB7F7	G2
IO77NB7F7	F1
IO77PB7F7	G1
IO78NB7F7	D2
IO78PB7F7	E2
IO79NB7F7	F3
IO79PB7F7	G3
IO80NB7F7	E3
IO80PB7F7	E4
IO81NB7F7	D1
IO81PB7F7	E1
IO82NB7F7	D3
IO82PB7F7	C2
IO83NB7F7	B1

FG324	
AX125 Function	Pin NumberVCCDA
IO83PB7F7	C1
Dedicated I/O	
VCCDA	F5
GND	A1
GND	A18
GND	B17
GND	B2
GND	C16
GND	C3
GND	E16
GND	F13
GND	F6
GND	G12
GND	G7
GND	H10
GND	H11
GND	H8
GND	H9
GND	J10
GND	J11
GND	J8
GND	J9
GND	K10
GND	K11
GND	K8
GND	K9
GND	L10
GND	L11
GND	L8
GND	L9
GND	M12
GND	M7
GND	N13
GND	N6
GND	R14

FG484	
AX250 Function	Pin Number
IO52NB3F3	P18
IO52PB3F3	P19
IO53NB3F3	R20
IO53PB3F3	P20
IO54NB3F3	T21
IO54PB3F3	R21
IO55NB3F3	R17
IO55PB3F3	P17
IO56NB3F3	U20
IO56PB3F3	T20
IO57NB3F3	T18
IO57PB3F3	R18
IO58NB3F3	U19
IO58PB3F3	T19
IO59NB3F3	R16
IO59PB3F3	P16
IO60NB3F3	W20
IO60PB3F3	V20
IO61NB3F3	U18
IO61PB3F3	V19
Bank 4	
IO62NB4F4	T15
IO62PB4F4	T16
IO63NB4F4	W17
IO63PB4F4	V17
IO64NB4F4	V15
IO64PB4F4	V16
IO65NB4F4	Y19
IO65PB4F4	W18
IO66NB4F4	AB18
IO66PB4F4	AB19
IO67NB4F4	W15
IO67PB4F4	W16
IO68NB4F4	U14
IO68PB4F4	U15
IO69NB4F4	AA16

FG484	
AX250 Function	Pin Number
IO69PB4F4	AA17
IO70NB4F4	AB14
IO70PB4F4	AB15
IO71NB4F4	Y14
IO71PB4F4	W14
IO72NB4F4	AA14
IO72PB4F4	AA15
IO73NB4F4	AA13
IO73PB4F4	AB13
IO74NB4F4/CLKEN	V12
IO74PB4F4/CLKEP	V13
IO75NB4F4/CLKFN	W11
IO75PB4F4/CLKFP	W12
Bank 5	
IO76NB5F5/CLKGN	U10
IO76PB5F5/CLKGP	U11
IO77NB5F5/CLKHN	V9
IO77PB5F5/CLKHP	V10
IO78NB5F5	AA9
IO78PB5F5	AA10
IO79NB5F5	AB9
IO79PB5F5	AB10
IO80NB5F5	AA7
IO80PB5F5	AA8
IO81NB5F5	W8
IO81PB5F5	W9
IO82NB5F5	AB5
IO82PB5F5	AB6
IO83NB5F5	AA5
IO83PB5F5	AA6
IO84NB5F5	U8
IO84PB5F5	U9
IO85NB5F5	Y6
IO85PB5F5	Y7
IO86NB5F5	W6
IO86PB5F5	W7

FG484	
AX250 Function	Pin Number
IO87NB5F5	Y4
IO87PB5F5	Y5
IO88NB5F5	V6
IO88PB5F5	V7
IO89NB5F5	T7
IO89PB5F5	T8
Bank 6	
IO90NB6F6	V4
IO90PB6F6	W5
IO91NB6F6	P7
IO91PB6F6	R7
IO92NB6F6	U5
IO92PB6F6	T5
IO93NB6F6	P6
IO93PB6F6	R6
IO94NB6F6	T4
IO94PB6F6	U4
IO95NB6F6	P5
IO95PB6F6	R5
IO96NB6F6	T3
IO96PB6F6	U3
IO97NB6F6	P3
IO97PB6F6	R3
IO98NB6F6	R2
IO98PB6F6	T2
IO99NB6F6	P4
IO99PB6F6	R4
IO100NB6F6	P1
IO100PB6F6	R1
IO101NB6F6	M7
IO101PB6F6	N7
IO102NB6F6	N2
IO102PB6F6	P2
IO103NB6F6	M6
IO103PB6F6	N6
IO104NB6F6	M4

FG484	
AX250 Function	**Pin Number**
VCCPLH	T10
VCCDA	D14
VCCDA	D5
VCCDA	F16
VCCDA	G12
VCCDA	L4
VCCDA	M18
VCCDA	T11
VCCDA	T17
VCCDA	U7
VCCDA	V14
VCCDA	V8
VCCIB0	A3
VCCIB0	B3
VCCIB0	H10
VCCIB0	H11
VCCIB0	H9
VCCIB1	A20
VCCIB1	B20
VCCIB1	H12
VCCIB1	H13
VCCIB1	H14
VCCIB2	C21
VCCIB2	C22
VCCIB2	J15
VCCIB2	K15
VCCIB2	L15
VCCIB3	M15
VCCIB3	N15
VCCIB3	P15
VCCIB3	Y21
VCCIB3	Y22
VCCIB4	AA20
VCCIB4	AB20
VCCIB4	R12
VCCIB4	R13

FG484	
AX250 Function	**Pin Number**
VCCIB4	R14
VCCIB5	AA3
VCCIB5	AB3
VCCIB5	R10
VCCIB5	R11
VCCIB5	R9
VCCIB6	M8
VCCIB6	N8
VCCIB6	P8
VCCIB6	Y1
VCCIB6	Y2
VCCIB7	C1
VCCIB7	C2
VCCIB7	J8
VCCIB7	K8
VCCIB7	L8
VCOMPLA	D10
VCOMPLB	G10
VCOMPLC	E12
VCOMPLD	G14
VCOMPLE	W13
VCOMPLF	T13
VCOMPLG	V11
VCOMPLH	T9
VPUMP	D17

FG676	
AX500 Function	**Pin Number**
IO51NB2F4	L20
IO51PB2F4	L21
IO52NB2F5	K26
IO52PB2F5	J26
IO53NB2F5	L23
IO53PB2F5	L22
IO54NB2F5	L24
IO54PB2F5	K24
IO55NB2F5	M20
IO55PB2F5	M21
IO56NB2F5	L26
IO56PB2F5	L25
IO57NB2F5	M23
IO57PB2F5	M22
IO58NB2F5	M26
IO58PB2F5	M25
IO59NB2F5	N22
IO59PB2F5	N23
IO60NB2F5	N24
IO60PB2F5	M24
IO61NB2F5	N20
IO61PB2F5	N21
IO62NB2F5	P25
IO62PB2F5	N25
Bank 3	
IO63NB3F6	T26
IO63PB3F6	R26
IO64NB3F6	R24
IO64PB3F6	P24
IO65NB3F6	P20
IO65PB3F6	P21
IO66NB3F6	T25
IO66PB3F6	R25
IO67NB3F6	T23
IO67PB3F6	R23

FG676	
AX500 Function	**Pin Number**
IO68NB3F6	V26
IO68PB3F6	U26
IO69NB3F6	V25
IO69PB3F6	U25
IO70NB3F6	Y25
IO70PB3F6	W25
IO71NB3F6	W24
IO71PB3F6	V24
IO72NB3F6	V23
IO72PB3F6	U23
IO73NB3F6	T21
IO73PB3F6	T20
IO74NB3F7	AA26
IO74PB3F7	Y26
IO75NB3F7	AA24
IO75PB3F7	Y24
IO76NB3F7	Y23
IO76PB3F7	W23
IO77NB3F7	V21
IO77PB3F7	U21
IO78NB3F7	AB25
IO78PB3F7	AA25
IO79NB3F7	AC26
IO79PB3F7	AB26
IO80NB3F7	AC24
IO80PB3F7	AB24
IO81NB3F7	AB23
IO81PB3F7	AA23
IO82NB3F7	AA22
IO82PB3F7	Y22
IO83NB3F7	AE26
IO83PB3F7	AD26
Bank 4	
IO84NB4F8	AB21
IO84PB4F8	AA21

FG676	
AX500 Function	**Pin Number**
IO85NB4F8	AE23
IO85PB4F8	AE24
IO86NB4F8	AC21
IO86PB4F8	AC22
IO87NB4F8	AF22
IO87PB4F8	AF23
IO88NB4F8	AD22
IO88PB4F8	AD23
IO89NB4F8	AC19
IO89PB4F8	AC20
IO90NB4F8	AE21
IO90PB4F8	AE22
IO91NB4F8	AA17
IO91PB4F8	AA18
IO92NB4F8	AD20
IO92PB4F8	AD21
IO93NB4F8	AF20
IO93PB4F8	AF21
IO94NB4F9	AE19
IO94PB4F9	AE20
IO95NB4F9	AC17
IO95PB4F9	AC18
IO96NB4F9	AD18
IO96PB4F9	AD19
IO97NB4F9	AA16
IO97PB4F9	Y16
IO98NB4F9	AE17
IO98PB4F9	AE18
IO99NB4F9	AC16
IO99PB4F9	AB16
IO100NB4F9	AF17
IO100PB4F9	AF18
IO101NB4F9	AA15
IO101PB4F9	Y15
IO102NB4F9	AC15

PQ208	
AX250 Function	Pin Number
Bank 0	
IO02NB0F0	197
IO03NB0F0	198
IO03PB0F0	199
IO12NB0F0/HCLKAN	191
IO12PB0F0/HCLKAP	192
IO13NB0F0/HCLKBN	185
IO13PB0F0/HCLKBP	186
Bank 1	
IO14NB1F1/HCLKCN	180
IO14PB1F1/HCLKCP	181
IO15NB1F1/HCLKDN	174
IO15PB1F1/HCLKDP	175
IO16NB1F1	170
IO16PB1F1	171
IO24NB1F1	165
IO24PB1F1	166
IO26NB1F1	161
IO26PB1F1	162
IO27NB1F1	159
IO27PB1F1	160
Bank 2	
IO29NB2F2	151
IO29PB2F2	153
IO30NB2F2	152
IO30PB2F2	154
IO31PB2F2	148
IO32NB2F2	146
IO32PB2F2	147
IO34NB2F2	144
IO34PB2F2	145
IO39NB2F2	139
IO39PB2F2	140
IO40PB2F2	141
IO41NB2F2	137
IO41PB2F2	138
IO43NB2F2	132

PQ208	
AX250 Function	Pin Number
IO43PB2F2	134
IO44NB2F2	131
IO44PB2F2	133
Bank 3	
IO45NB3F3	127
IO45PB3F3	129
IO46NB3F3	126
IO46PB3F3	128
IO48NB3F3	122
IO48PB3F3	123
IO50NB3F3	120
IO50PB3F3	121
IO55NB3F3	116
IO55PB3F3	117
IO57NB3F3	114
IO57PB3F3	115
IO59NB3F3	110
IO59PB3F3	111
IO60NB3F3	108
IO60PB3F3	109
IO61NB3F3	106
IO61PB3F3	107
Bank 4	
IO62NB4F4	100
IO62PB4F4	103
IO63NB4F4	101
IO63PB4F4	102
IO64NB4F4	96
IO64PB4F4	97
IO72NB4F4	91
IO72PB4F4	92
IO74NB4F4/CLKEN	87
IO74PB4F4/CLKEP	88
IO75NB4F4/CLKFN	81
IO75PB4F4/CLKFP	82
Bank 5	
IO76NB5F5/CLKGN	76

PQ208	
IO9[IO1)-5.7(05PB6F)-NB3F3PQ20.6 151.5 .78 ref230	
IO76PB5F5/CLKGP	77
IO77NB5F5/CLKHN	70
IO77PB5F5/CLKHP	71
IO78NB5F5	66
IO78PB5F5	67
IO86NB5F5	62
IO87NB5F5	60
IO87PB5F5	61
IO88NB5F5	56
IO88PB5F5	57
IO89NB5F5	54
IO89PB5F5	55
Bank 6	
IO91NB6F6	47
IO91PB6F6	49
IO92NB6F6	48
IO92PB6F6	50
IO93NB6F6	42
IO93PB6F6	43
IO94PB6F6	44
IO96NB6F6	40
IO96PB6F6	41
IO101NB6F6	35
IO101PB6F6	36
IO102PB6F6	37
IO103NB6F6	33
IO103PB6F6	34
IO105NB6F6	28
IO105PB6F6	30
IO106NB6F6	27
IO106PB6F6	29
Bank 7	
IO107NB7F7	23
IO107PB7F7	25
IO108NB7F7	22
IO108PB7F7	24
IO110NB7F7	18

CQ208	
AX500 Function	Pin Number
Bank 0	
IO03NB0F0	198
IO03PB0F0	199
IO04NB0F0	197
IO19NB0F1/HCLKAN	191
IO19PB0F1/HCLKAP	192
IO20NB0F1/HCLKBN	185
IO20PB0F1/HCLKBP	186
Bank 1	
IO21NB1F2/HCLKCN	180
IO21PB1F2/HCLKCP	181
IO22NB1F2/HCLKDN	174
IO22PB1F2/HCLKDP	175
IO23NB1F2	170
IO23PB1F2	171
IO37NB1F3	165
IO37PB1F3	166
IO39NB1F3	161
IO39PB1F3	162
IO41NB1F3	159
IO41PB1F3	160
Bank 2	
IO43NB2F4	151
IO43PB2F4	153
IO44NB2F4	152
IO44PB2F4	154
IO45PB2F4	148
IO46NB2F4	146
IO46PB2F4	147
IO48NB2F4	144
IO48PB2F4	145
IO57NB2F5	139
IO57PB2F5	140
IO58PB2F5	141
IO59NB2F5	137
IO59PB2F5	138
IO61NB2F5	132

CQ208	
AX500 Function	Pin Number
IO61PB2F5	134
IO62NB2F5	131
IO62PB2F5	133
Bank 3	
IO63NB3F6	127
IO63PB3F6	129
IO64NB3F6	126
IO64PB3F6	128
IO66NB3F6	122
IO66PB3F6	123
IO68NB3F6	120
IO68PB3F6	121
IO77NB3F7	116
IO77PB3F7	117
IO79NB3F7	114
IO79PB3F7	115
IO81NB3F7	110
IO81PB3F7	111
IO82NB3F7	108
IO82PB3F7	109
IO83NB3F7	106
IO83PB3F7	107
Bank 4	
IO84PB4F8	103
IO85NB4F8	100
IO86NB4F8	101
IO86PB4F8	102
IO87NB4F8	96
IO87PB4F8	97
IO101NB4F9	91
IO101PB4F9	92
IO103NB4F9/CLKEN	87
IO103PB4F9/CLKEP	88
IO104NB4F9/CLKFN	81
IO104PB4F9/CLKFP	82
Bank 5	
IO105NB5F10/CLKGN	76

IO105PB5F10/CLKGP	77
IO106NB5F10/CLKHN	70
IO106PB5F10/CLKHP	71
IO107NB5F10	66
IO107PB5F10	67
IO119NB5F11	62
IO121NB5F11	60
IO121PB5F11	61
IO123NB5F11	56
IO123PB5F11	57
IO125NB5F11	54
IO125PB5F11	55
Bank 6	
IO127NB6F12	47
IO127PB6F12	49
IO128NB6F12	48
IO128PB6F12	50
IO129NB6F12	42
IO129PB6F12	43
IO130PB6F12	44
IO132NB6F12	40
IO132PB6F12	41
IO141NB6F13	35
IO141PB6F13	36
IO142PB6F13	37
IO143NB6F13	33
IO143PB6F13	34
IO145NB6F13	28
IO145PB6F13	30
IO146NB6F13	27
IO146PB6F13	29
Bank 7	
IO147NB7F14	23
IO147PB7F14	26 Tc .0028 Tw (Bank 7)

CG624	
AX1000 Function	Pin Number
IO131NB4F12	V19
IO131PB4F12	W19
IO133NB4F12	Y18
IO133PB4F12	Y19
IO135NB4F12	W18
IO135PB4F12	V18
IO137NB4F12	Y17
IO137PB4F12	AA17
IO138NB4F12	AB19
IO138PB4F12	AB18
IO139NB4F13	AA19
IO139PB4F13	U18
IO140NB4F13	AC20
IO140PB4F13	AC21
IO141NB4F13	AD17
IO141PB4F13	AD18
IO142NB4F13	AD21
IO142PB4F13	AD22
IO143NB4F13	AB17
IO143PB4F13	AC17
IO144PB4F13	AE22
IO145NB4F13	AE15
IO145PB4F13	AE16
IO146NB4F13	AD19
IO146PB4F13	AD20
IO147NB4F13	AD15
IO147PB4F13	AD16
IO148PB4F13	AE21
IO149NB4F13	AD14
IO149PB4F13	AC14
IO150NB4F13	AE19
IO150PB4F13	AE20
IO151NB4F13	V17
IO151PB4F13	W17
IO152NB4F14	AB16
IO152PB4F14	W16

CG624	
AX1000 Function	Pin Number
IO153NB4F14	Y15
IO153PB4F14	Y16
IO155NB4F14	V15
IO155PB4F14	V16
IO156NB4F14	AB14
IO156PB4F14	AB15
IO157NB4F14	AE14
IO157PB4F14	AC18
IO158NB4F14	AC15
IO158PB4F14	AC19
IO159NB4F14/CLKEN	W14
IO159PB4F14/CLKEP	W15
IO160NB4F14/CLKFN	AC13
IO160PB4F14/CLKFP	AD13
Bank 5	
IO161NB5F15/CLKGN	W13
IO161PB5F15/CLKGP	Y13
IO162NB5F15/CLKHN	AC12
IO162PB5F15/CLKHP	AD12
IO163NB5F15	V9
IO163PB5F15	V10
IO164NB5F15	V11
IO164PB5F15	T13
IO165NB5F15	U13
IO165PB5F15	V13
IO167NB5F15	W11
IO167PB5F15	W12
IO168NB5F15	AB6
IO168PB5F15	AA6
IO169NB5F15	V8
IO169PB5F15	V7
IO171NB5F16	W8
IO171PB5F16	W9
IO172NB5F16	AB8
IO172PB5F16	AC8
IO173NB5F16	AA11

CG624	
AX1000 Function	Pin Number
IO173PB5F16	Y11
IO174NB5F16	AB10
IO174PB5F16	AB11
IO175NB5F16	AC9
IO175PB5F16	AE9
IO177NB5F16	AA8
IO177PB5F16	Y8
IO178NB5F16	Y6
IO178PB5F16	W6
IO179NB5F16	Y10
IO179PB5F16	W10
IO180NB5F16	Y7
IO180PB5F16	W7
IO181NB5F17	AD9
IO181PB5F17	AD10
IO182NB5F17	AE10
IO182PB5F17	AE11
IO183NB5F17	AD7
IO183PB5F17	AD8
IO184NB5F17	AB9
IO185NB5F17	AE6
IO185PB5F17	AE7
IO186NB5F17	AE4
IO186PB5F17	AE5
IO187NB5F17	AA9
IO187PB5F17	Y9
IO188NB5F17	U8
IO189NB5F17	AD5
IO189PB5F17	AD6
IO191NB5F17	AC5
IO191PB5F17	AC6
IO192NB5F17	AB7
IO192PB5F17	AC7
Bank 6	
IO193NB6F18	U6
IO193PB6F18	U5