& ' (((% &)

* * + & ' (((% &

- ,	.
$ -	/ %$
$, #	&' 0
,	) 1 2 #
$	3$ 4 5 , . , , 6 6 ! / 6 , ! /
-	- . / - 7 8 9 7 9
5 .	) :
- , #	&' ; 0 <&' ; * %=
-	>4! , 2
- / . , #	?; * %
/ ! , #	& @ * %
8 , <8 8 =	& %8 A @@8
9 $	! 9 &) * &1
.	
.	) 1B$ A %@B$ < ! =
	,
- $	( ) 4C>-
, 9 -	( ) 4C>- < * : =
- 6 / 4	D * @) &((?)

Table 4.6 SFR Information (6) (1)

Address	Register	Symbol	After Reset
0140h			
0141h			
0142h			
0143h			
0144h			
0145h			
0146h			
0147h			
0148h			
0149h			
014Ah			
014Bh			
014Ch			
014Dh			
014Eh			
014Fh			
0150h			
0151h			
0152h			
0153h			
0154h			
0155h			
0156h			
0157h			
0158h			
0159h			
015Ah			
015Bh			
015Ch			
015Dh			
015Eh			
015Fh			
0160h			
0161h			
0162h			
0163h			
0164h			
0165h			
0166h			
0167h			
0168h			
0169h			
016Ah			
016Bh			
016Ch			
016Dh			
016Eh			
016Fh			
0170h			
0171h			
0172h			
0173h			
0174h			
0175h			
0176h			
0177h			
0178h			
0179h			
017Ah			
017Bh			
017Ch			
017Dh			
017Eh			
017Fh			

Note:
1. The blank areas are reserved and cannot be accessed by users.

Table 4.7 SFR Information (7) (1)

Address	Register	Symbol	After Reset
0180h	Timer RA Pin Select Register	TRASR	00h
0181h	Timer RB/RC Pin Select Register	TRBRCSR	00h
0182h	Timer RC Pin Select Register 0	TRCPSR0	00h
0183h	Timer RC Pin Select Register 1	TRCPSR1	00h
0184h			
0185h			
0186h			
0187h			
0188h	UART0 Pin Select Register	U0SR	00h
0189h			
018Ah	UART2 Pin Select Register 0	U2SR0	00h
018Bh	UART2 Pin Select Register 1	U2SR1	00h
018Ch			
018Dh			
018Eh	INT Interrupt Input Pin Select Register	INTSR	00h
018Fh	I/O Function Pin Select Register	PINSR	00h
0190h	Low-Voltage Signal Mode Control Register	TSMR	00h
0191h			
0192h			
0193h			
0194h			
0195h			
0196h			
0197h			
0198h			
0199h			
019Ah			
019Bh			
019Ch			
019Dh			
019Eh			
019Fh			
01A0h			
01A1h			
01A2h			
01A3h			
01A4h			
01A5h			
01A6h			
01A7h			
01A8h			
01A9h			
01AAh			
01ABh			
01ACh			
01ADh			
01AEh			
01AFh			
01B0h			
01B1h			
01B2h	Flash Memory Status Register	FST	10000X00b
01B3h			
01B4h	Flash Memory Control Register 0	FMR0	00h
01B5h	Flash Memory Control Register 1	FMR1	00h
01B6h	Flash Memory Control Register 2	FMR2	00h
01B7h			
01B8h			
01B9h			
01BAh			
01BBh			
01BCh			
01BDh			
01BEh			
01BFh			

X: Undefined

Note:

1. The blank areas are reserved and cannot be accessed by users.

Table 4.8 SFR Information (8) (1)

Address	Register	Symbol	After Reset
01C0h	Address Match Interrupt Register 0	RMAD0	XXh
01C1h			XXh
01C2h			0000XXXXb
01C3h	Address Match Interrupt Enable Register 0	AIER0	00h
01C4h	Address Match Interrupt Register 1	RMAD1	XXh
01C5h			XXh
01C6h			0000XXXXb
01C7h	Address Match Interrupt Enable Register 1	AIER1	00h
01C8h			
01C9h			
01CAh			
01CBh			
01CCh			
01CDh			
01CEh			
01CFh			
01D0h			
01D1h			
01D2h			
01D3h			
01D4h			
01D5h			
01D6h			
01D7h			
01D8h			
01D9h			
01DAh			
01DBh			
01DCh			
01DDh			
01DEh			
01DFh			
01E0h	Pull-Up Control Register 0	PUR0	00h
01E1h	Pull-Up Control Register 1	PUR1	00h
01E2h			
01E3h			
01E4h			
01E5h			
01E6h			
01E7h			
01E8h			
01E9h			
01EAh			
01EBh			
01ECh			
01EDh			
01EEh			
01EFh			
01F0h	Port P1 Drive Capacity Control Register	P1DRR	00h
01F1h	Port P2 Drive Capacity Control Register	P2DRR	00h
01F2h	Drive Capacity Control Register 0	DRR0	00h
01F3h	Drive Capacity Control Register 1	DRR1	00h
01F4h			
01F5h	Input Threshold Control Register 0	VLT0	00h
01F6h	Input Threshold Control Register 1	VLT1	00h
01F7h			
01F8h			
01F9h			
01FAh	External Input Enable Register 0	INTEN	00h
01FBh			
01FCh	INT Input Filter Select Register 0	INTF	00h
01FDh			
01FEh	Key Input Enable Register 0	KIEN	00h
01FFh			

X: Undefined

Note:

1. The blank areas are reserved and cannot be accessed by users.

Table 4.13 ID Code Areas and Option Function Select Area

Address	Area Name	Symbol	After Reset
:			
FFDBh	Option Function Select Register 2	OFS2	(Note 1)
:			
FFDFh	ID1		(Note 2)
:			
FFE3h	ID2		(Note 2)
:			
FFEBh	ID3		(Note 2)
:			
FFEFh	ID4		(Note 2)
:			
FFF3h	ID5		(Note 2)
:			
FFF7h	ID6		(Note 2)
:			
FFFBh	ID7		(Note 2)
:			
FFFFh	Option Function Select Register	OFS	(Note 1)

Notes:

1. The option function select area is allocated in the flash memory, not in the SFRs. Set appropriate values as ROM data by a program.
   Do not write additions to the option function select area. If the block including the option function select area is erased, the option function select area is set to FFh.
   When blank products are shipped, the option function select area is set to FFh. It is set to the written value after written by the user.
   When factory-programming products are shipped, the value of the option function select area is the value programmed by the user.
2. The ID code areas are allocated in the flash memory, not in the SFRs. Set appropriate values as ROM data by a program.
   Do not write additions to the ID code areas. If the block including the ID code areas is erased, the ID code areas are set to FFh.
   When blank products are shipped, the ID code areas are set to FFh. They are set to the written value after written by the user.
   When factory-programming products are shipped, the value of the ID code areas is the value programmed by the user.

Table 5.4 Flash Memory (Program ROM) Electrical Characteristics

Symbol	Parameter	Conditions	Standard			Unit
			Min.	Typ.	Max.	
—	Program/erase endurance (2)		1,000 (3)	—	—	times
—	Byte program time		—	80	500	"s
—	Block erase time		—	0.3	—	s
td(SR-SUS)	Time delay from suspend request until suspend		—	—	5 + CPU clock × 3 cycles	ms
—	Interval from erase start/restart until following suspend request		0	—	—	"s
—	Time from suspend until erase restart		—	—	30 + CPU clock × 1 cycle	"s
td(CMDRST-READY)	Time from when command is forcibly terminated until reading is enabled		—	—	30 + CPU clock × 1 cycle	"s
—	Program, erase voltage		2.7	—	5.5	V
—	Read voltage		1.8	—	5.5	V
—	Program, erase temperature		0	—	60	$C
—	Data hold time (7)	Ambient temperature = 55$C	20	—	—	year

Notes:

1. Vcc = 2.7 V to 5.5 V at Topr = 0$C to 60$C, unless otherwise specified.
2. Definition of programming/erasure endurance
   The programming and erasure endurance is defined on a per-block basis.
   If the programming and erasure endurance is n (n = 1,000), each block can be erased n times. For example, if 1,024 1-byte writes are performed to different addresses in block A, a 1 Kbyte block, and then the block is erased, the programming/erasure endurance still stands at one.
   However, the same address must not be programmed more than once per erase operation (overwriting prohibited).
3. Endurance to guarantee all electrical characteristics after program and erase. (1 to Min. value can be guaranteed).
4. In a system that executes multiple programming operations, the actual erasure count can be reduced by writing to sequential addresses in turn so that as much of the block as possible is used up before performing an erase operation. For example, when programming groups of 16 bytes, the effective number of rewrites can be minimized by programming up to 128 groups before erasing them all in one operation. It is also advisable to retain data on the erasure endurance of each block and limit the number of erase operations to a certain number.
5. If an error occurs during block erase, attempt to execute the clear status register command, then execute the block erase command at least three times until the erase error does not occur.
6. Customers desiring program/erase failure rate information should contact their Renesas technical support representative.
7. The data hold time includes time that the power supply is off or the clock is not supplied.

Table 5.8 Voltage Detection 2 Circuit Electrical Characteristics

Symbol	Parameter	Condition	Standard			Unit
			Min.	Typ.	Max.	
V_{det2}	Voltage detection level Vdet2_0	At the falling of Vcc	3.70	4.00	4.30	V
—	Hysteresis width at the rising of Vcc in voltage detection 2 circuit		—	0.10	—	V
—	Voltage detection 2 circuit response time (2)	At the falling of Vcc from 5 V to (Vdet2_0 # 0.1) V	—	20	150	"s
—	Voltage detection circuit self power consumption	VCA27 = 1, Vcc = 5.0 V	—	1.7	—	"A
$t_{d(E-A)}$	Waiting time until voltage detection circuit operation starts (3)		—	—	100	"s

Notes:
1. The measurement condition is Vcc = 1.8 V to 5.5 V and Topr = #20$C to 85$C (N version).
2. Time until the voltage monitor 2 interrupt request is generated after the voltage passes V_{det2}.
3. Necessary time until the voltage detection circuit operates after setting to 1 again after setting the VCA27 bit in the VCA2 register to 0.

Table 5.9 Power-on Reset Circuit (2)

Symbol	Parameter	Condition	Standard			Unit
			Min.	Typ.	Max.	
t_{rth}	External power Vcc rise gradient	(Note 1)	0	—	50000	mV/msec

Notes:
1. The measurement condition is Topr = #20$C to 85$C (N version), unless otherwise specified.
2. To use the power-on reset function, enable voltage monitor 0 reset by setting the LVDAS bit in the OFS register to 0.

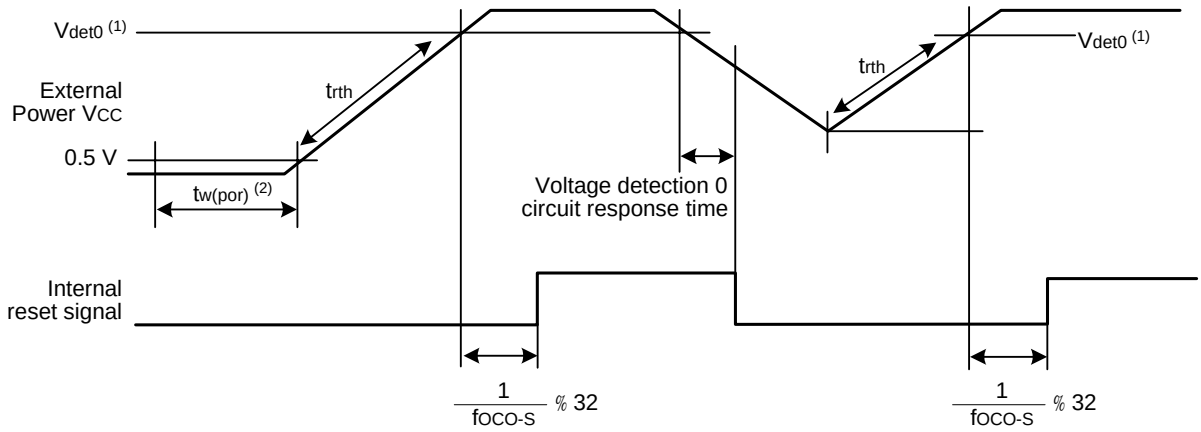

Notes:
1. V_{det0} indicates the voltage detection level of the voltage detection 0 circuit. Refer to 6. Voltage Detection Circuit of User's Manual: Hardware for details.
2. $t_{w(por)}$ indicates the duration the external power V_{CC} must be held below the valid voltage (0.5 V) to enable a power-on reset. When turning on the power after it falls with voltage monitor 0 reset disabled, maintain $t_{w(por)}$ for 1 ms or more.

Figure 5.3 Power-on Reset Circuit Electrical Characteristics

Table 5.10 High-speed On-Chip Oscillator Circuit Electrical Characteristics

Symbol	Parameter	Condition	Standard			Unit
			Min.	Typ.	Max.	
—	High-speed on-chip oscillator frequency after reset	Vcc = 1.8 V to 5.5 V #20$C & Topr & 85$C	38.4	40	41.6	MHz
	High-speed on-chip oscillator frequency when the FRA4 register correction value is written into the FRA1 register and the FRA5 register correction value into the FRA3 register (2)	Vcc = 1.8 V to 5.5 V #20$C & Topr & 85$C	35.389	36.864	38.338	MHz
	High-speed on-chip oscillator frequency when the FRA6 register correction value is written into the FRA1 register and the FRA7 register correction value into the FRA3 register	Vcc = 1.8 V to 5.5 V #20$C & Topr & 85$C	30.72	32	33.28	MHz
—	Oscillation stability time	Vcc = 5.0 V, Topr = 25$C	—	0.5	3	ms
—	Self power consumption at oscillation	Vcc = 5.0 V, Topr = 25$C	—	400	—	"A

Notes:
1. Vcc = 1.8 V to 5.5 V, Topr = #20$C to 85$C (N version), unless otherwise specified.
2. This enables the setting errors of bit rates such as 9600 bps and 38400 bps to be 0% when the serial interface is used in UART mode.

Table 5.11 Low-speed On-Chip Oscillator Circuit Electrical Characteristics

Symbol	Parameter	Condition	Standard			Unit
			Min.	Typ.	Max.	
fOCO-S	Low-speed on-chip oscillator frequency		60	125	250	kHz
—	Oscillation stability time	Vcc = 5.0 V, Topr = 25$C	—	30	100	"s
—	Self power consumption at oscillation	Vcc = 5.0 V, Topr = 25$C	—	2	—	"A

Note:
1. Vcc = 1.8 V to 5.5 V, Topr = #20$C to 85$C (N version), unless otherwise specified.

Table 5.12 Power Supply Circuit Timing Characteristics

Symbol	Parameter	Condition	Standard			Unit
			Min.	Typ.	Max.	
$t_{d(P-R)}$	Time for internal power supply stabilization during power-on (2)		—	—	2000	"s

Notes:
1. The measurement condition is Vcc = 1.8 V to 5.5 V and Topr = 25$C.
2. Waiting time until the internal power supply generation circuit stabilizes during power-on.

Timing Requirements
(Unless Otherwise Specified: Vcc = 5 V, Vss = 0 V at Topr = 25 $C)

Table 5.15 External Clock Input (XOUT)

Symbol	Parameter	Standard		Unit
		Min.	Max.	
$t_{c(XOUT)}$	XOUT input cycle time	50	—	ns
$t_{WH(XOUT)}$	XOUT input “H” width	24	—	ns
$t_{WL(XOUT)}$	XOUT input “L” width	24	—	ns

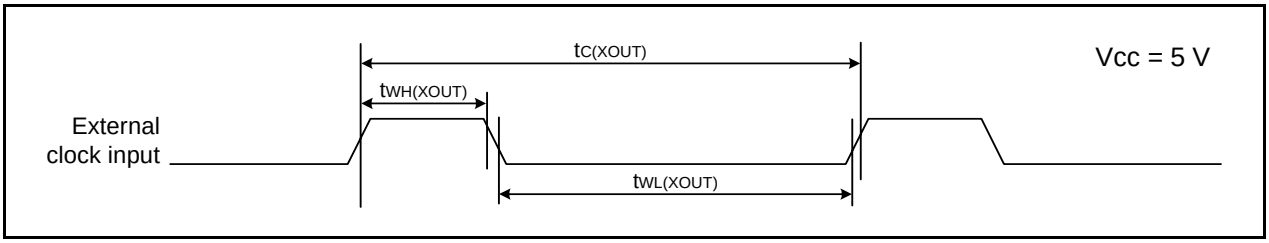

Figure 5.4 External Clock Input Timing Diagram when Vcc = 5 V

Table 5.16 TRAIO Input

Symbol	Parameter	Standard		Unit
		Min.	Max.	
$t_{c(TRAIO)}$	TRAIO input cycle time	100	—	ns
$t_{WH(TRAIO)}$	TRAIO input “H” width	40	—	ns
$t_{WL(TRAIO)}$	TRAIO input “L” width	40	—	ns

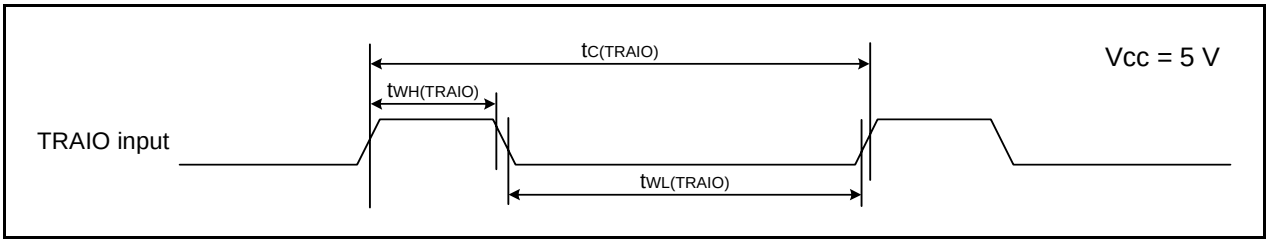

Figure 5.5 TRAIO Input Timing Diagram when Vcc = 5 V

Table 5.17 Serial Interface

Symbol	Parameter	Standard		Unit
		Min.	Max.	
$t_{c(CK)}$	CLKi input cycle time	200	—	ns
$t_{W(CKH)}$	CLKi input “H” width	100	—	ns
$t_{W(CKL)}$	CLKi input “L” width	100	—	ns
$t_{d(C-Q)}$	TXDi output delay time	—	50	ns
$t_{h(C-Q)}$	TXDi hold time	0	—	ns
$t_{su(D-C)}$	RXDi input setup time	50	—	ns
$t_{h(C-D)}$	RXDi input hold time	90	—	ns

i = 0 to 2

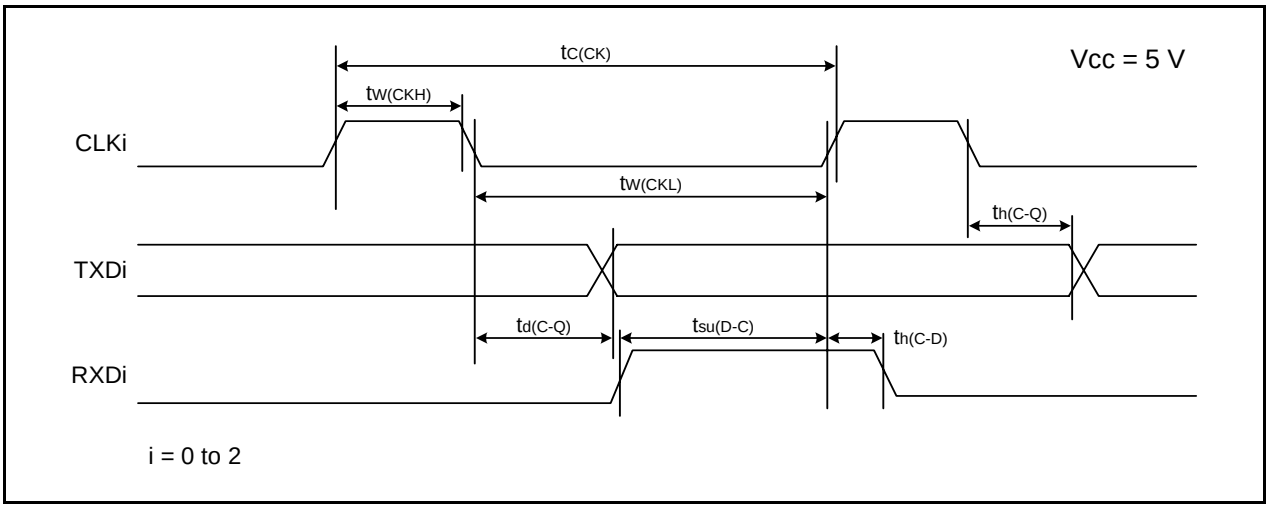

Figure 5.6 Serial Interface Timing Diagram when Vcc = 5 V

Table 5.18 External Interrupt $\overline{INTi}$ (i = 0 to 3) Input, Key Input Interrupt $\overline{KIi}$ (i = 0 to 3)

Symbol	Parameter	Standard		Unit
		Min.	Max.	
$t_{W(INH)}$	$\overline{INTi}$ input “H” width, $\overline{KIi}$ input “H” width	250 (1)	—	ns
$t_{W(INL)}$	$\overline{INTi}$ input “L” width, $\overline{KIi}$ input “L” width	250 (2)	—	ns

Notes:
1. When selecting the digital filter by the $\overline{INTi}$ input filter select bit, use an $\overline{INTi}$ input HIGH width of either (1/digital filter clock frequency × 3) or the minimum value of standard, whichever is greater.
2. When selecting the digital filter by the $\overline{INTi}$ input filter select bit, use an $\overline{INTi}$ input LOW width of either (1/digital filter clock frequency × 3) or the minimum value of standard, whichever is greater.

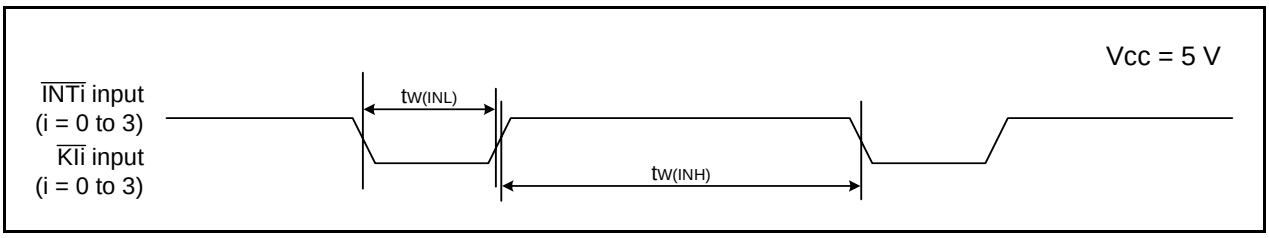

Figure 5.7 Input Timing for External Interrupt $\overline{INTi}$ and Key Input Interrupt $\overline{KIi}$ when Vcc = 5 V

Table 5.19 Electrical Characteristics (3) [2.7 V & Vcc ' 4.2 V]

Symbol	Parameter		Condition		Standard			Unit
					Min.	Typ.	Max.	
V_{OH}	Output "H" voltage	Other than XOUT	Drive capacity High	I_{OH} = #5 mA	Vcc #+0.5	—	Vcc	V
			Drive capacity Low	I_{OH} = #1 mA	Vcc #+0.5	—	Vcc	V
		XOUT		I_{OH} = #200 "A	1.0	—	Vcc	V
V_{OL}	Output "L" voltage	Other than XOUT	Drive capacity High	I_{OL} = 5 mA	—	—	0.5	V
			Drive capacity Low	I_{OL} = 1 mA	—	—	0.5	V
		XOUT		I_{OL} = 200 "A	—	—	0.5	V
V_{T+}-V_{T-}	Hysteresis	$\overline{INT0}$, $\overline{INT1}$, $\overline{INT2}$, $\overline{INT3}$, KI0, KI1, $\overline{KI2}$, $\overline{KI3}$, TRAIO, TRBO, TRCIOA, TRCIOB, TRCIOC, TRCIOD, $\overline{TRCTRG}$, TRCCLK, $\overline{ADTRG}$, RXD0, RXD2, CLK0, CLK2, SCL2, SDA2	Vcc = 3.0 V		0.1	0.4	—	V
		$\overline{RESET}$	Vcc = 3.0 V		0.1	0.5	—	V
I_{IH}	Input "H" current		V_I = 3 V, Vcc = 3.0 V		—	—	4.0	"A
I_{IL}	Input "L" current		V_I = 0 V, Vcc = 3.0 V		—	—	#4.0	"A
R_{PULLUP}	Pull-up resistance		V_I = 0 V, Vcc = 3.0 V		42	84	168	k)
R_{fXIN}	Feedback resistance	XIN			—	0.3	—	M)
V_{RAM}	RAM hold voltage		During stop mode		1.8	—	—	V

Note:
1. 2.7 V & Vcc ' 4.2 V at Topr = #20$C to 85$C (N version), f(XIN) = 10 MHz, unless otherwise specified.

Table 5.20 Electrical Characteristics (4) [2.7 V & Vcc ' 3.3 V]
(Topr = #20$C to 85$C (N version), unless otherwise specified.)

Symbol	Parameter	Condition		Standard			Unit
				Min.	Typ.	Max.	
Icc	Power supply current (Vcc = 2.7 V to 3.3 V) Single-chip mode, output pins are open, other pins are Vss	High-speed clock mode	XIN = 10 MHz (square wave) High-speed on-chip oscillator off Low-speed on-chip oscillator on = 125 kHz No division	—	3.5	10	mA
			XIN = 10 MHz (square wave) High-speed on-chip oscillator off Low-speed on-chip oscillator on = 125 kHz Divide-by-8	—	1.5	7.5	mA
		High-speed on-chip oscillator mode	XIN clock off High-speed on-chip oscillator on fOCO-F = 20 MHz Low-speed on-chip oscillator on = 125 kHz No division	—	7	15	mA
			XIN clock off High-speed on-chip oscillator on fOCO-F = 20 MHz Low-speed on-chip oscillator on = 125 kHz Divide-by-8	—	3	—	mA
			XIN clock off High-speed on-chip oscillator on fOCO-F = 10 MHz Low-speed on-chip oscillator on = 125 kHz No division	—	4	—	mA
			XIN clock off High-speed on-chip oscillator on fOCO-F = 10 MHz Low-speed on-chip oscillator on = 125 kHz Divide-by-8	—	1.5	—	mA
			XIN clock off High-speed on-chip oscillator on fOCO-F = 4 MHz Low-speed on-chip oscillator on = 125 kHz Divide-by-16 MSTTRD = MSTTRC = 1	—	1	—	mA
		Low-speed on-chip oscillator mode	XIN clock off High-speed on-chip oscillator off Low-speed on-chip oscillator on = 125 kHz Divide-by-8, FMR27 = 1, VCA20 = 0	—	90	390	"A
		Wait mode	XIN clock off High-speed on-chip oscillator off Low-speed on-chip oscillator on = 125 kHz While a WAIT instruction is executed Peripheral clock operation VCA27 = VCA26 = VCA25 = 0, VCA20 = 1	—	15	90	"A
			XIN clock off High-speed on-chip oscillator off Low-speed on-chip oscillator on = 125 kHz While a WAIT instruction is executed Peripheral clock off VCA27 = VCA26 = VCA25 = 0, VCA20 = 1	—	4	80	"A
			XIN clock off High-speed on-chip oscillator off Low-speed on-chip oscillator off While a WAIT instruction is executed VCA27 = VCA26 = VCA25 = 0, VCA20 = 1	—	3.5	—	"A
		Stop mode	XIN clock off, Topr = 25$C High-speed on-chip oscillator off Low-speed on-chip oscillator off CM10 = 1 Peripheral clock off VCA27 = VCA26 = VCA25 = 0	—	2	5.0	"A
			XIN clock off, Topr = 85$C High-speed on-chip oscillator off Low-speed on-chip oscillator off CM10 = 1 Peripheral clock off VCA27 = VCA26 = VCA25 = 0	—	5	—	"A

Timing requirements
(Unless Otherwise Specified: Vcc = 3 V, Vss = 0 V at Topr = 25 $C)

Table 5.21 External Clock Input (XOUT)

Symbol	Parameter	Standard		Unit
		Min.	Max.	
$t_{c(XOUT)}$	XOUT input cycle time	50	—	ns
$t_{WH(XOUT)}$	XOUT input “H” width	24	—	ns
$t_{WL(XOUT)}$	XOUT input “L” width	24	—	ns

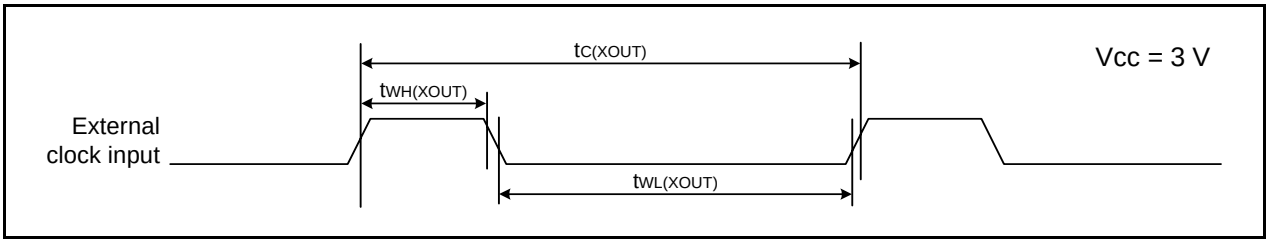

Figure 5.8 External Clock Input Timing Diagram when Vcc = 3 V

Table 5.22 TRAIO Input

Symbol	Parameter	Standard		Unit
		Min.	Max.	
$t_{c(TRAIO)}$	TRAIO input cycle time	300	—	ns
$t_{WH(TRAIO)}$	TRAIO input “H” width	120	—	ns
$t_{WL(TRAIO)}$	TRAIO input “L” width	120	—	ns

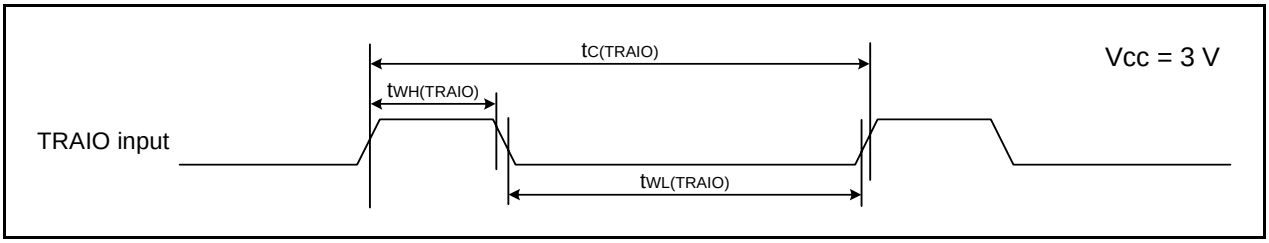

Figure 5.9 TRAIO Input Timing Diagram when Vcc = 3 V

Table 5.29 Serial Interface

Symbol	Parameter	Standard		Unit
		Min.	Max.	
$t_{c(CK)}$	CLKi input cycle time	800	—	ns
$t_{W(CKH)}$	CLKi input “H” width	400	—	ns
$t_{W(CKL)}$	CLKi input “L” width	400	—	ns
$t_{d(C-Q)}$	TXDi output delay time	—	200	ns
$t_{h(C-Q)}$	TXDi hold time	0	—	ns
$t_{su(D-C)}$	RXDi input setup time	150	—	ns
$t_{h(C-D)}$	RXDi input hold time	90	—	ns

i = 0 to 2

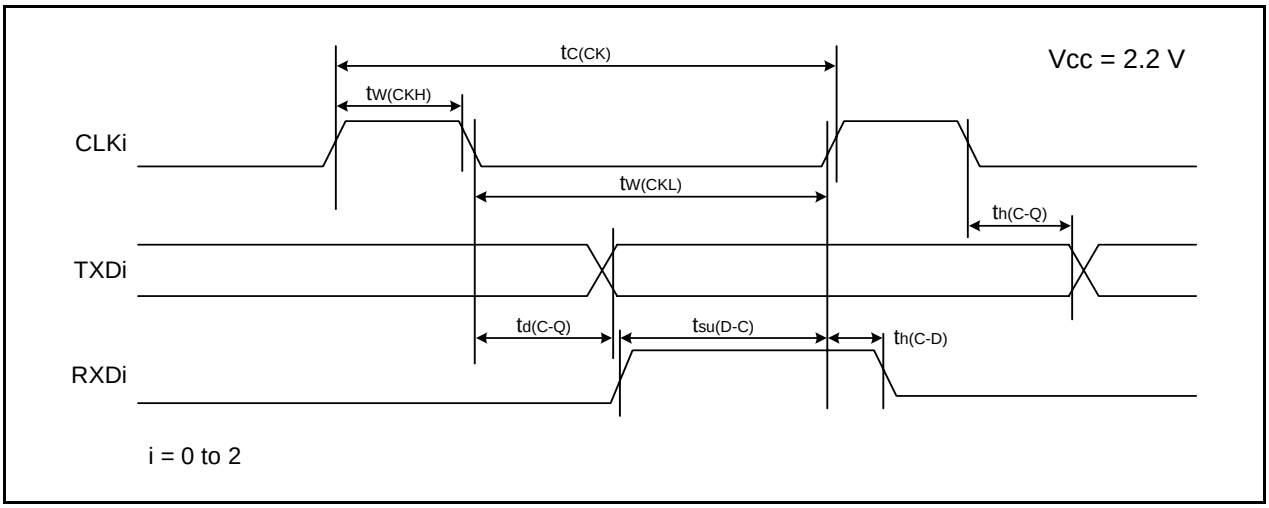

Figure 5.14 Serial Interface Timing Diagram when Vcc = 2.2 V

Table 5.30 External Interrupt $\overline{INTi}$ (i = 0 to 3) Input, Key Input Interrupt $\overline{KIi}$ (i = 0 to 3)

Symbol	Parameter	Standard		Unit
		Min.	Max.	
$t_{W(INH)}$	$\overline{INTi}$ input “H” width, $\overline{KIi}$ input “H” width	1000 (1)	—	ns
$t_{W(INL)}$	$\overline{INTi}$ input “L” width, $\overline{KIi}$ input “L” width	1000 (2)	—	ns

Notes:
1. When selecting the digital filter by the $\overline{INTi}$ input filter select bit, use an $\overline{INTi}$ input HIGH width of either (1/digital filter clock frequency × 3) or the minimum value of standard, whichever is greater.
2. When selecting the digital filter by the $\overline{INTi}$ input filter select bit, use an $\overline{INTi}$ input LOW width of either (1/digital filter clock frequency × 3) or the minimum value of standard, whichever is greater.

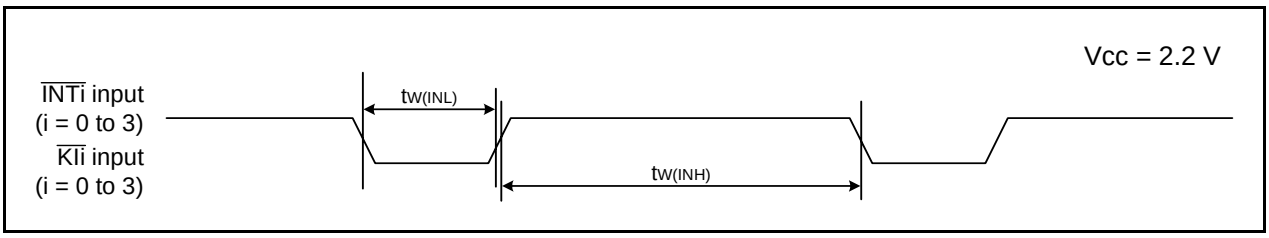

Figure 5.15 Input Timing for External Interrupt $\overline{INTi}$ and Key Input Interrupt $\overline{KIi}$ when Vcc = 2.2 V

REVISION HISTORY	R8C/33T Group Datasheet

Rev.	Date	Description	
		Page	Summary
1.00	Mar 16, 2010	—	First Edition issued
1.10	Apr 26, 2011	All pages	“UART1” deleted
		3	Table 1.2 revised, Note 1 deleted
		4	Table 1.3, Note 1, Figure 1.1 revised
		5	Figure 1.2 revised
		6	Figure 1.3 revised
		7	Table 1.4 revised
		8	Table 1.5 revised
		12	3.1 “The internal ROM . . . with address 0FFFFh.” deleted
		14	Table 4.2 revised
		18	Table 4.6 revised
		19	Table 4.7 revised
		26	Table 5.1 revised
		27	Note 1 revised
		29	Table 5.3, Note 1 revised
		31	Table 5.5, Note 1, Note 7 revised, and Note 8 added
		32	Note 1 of Table 5.6 and Table 5.7 revised
		33	Note 1 of Table 5.8 and Table 5.9 revised
		34	Table 5.10, Note 1 of Table 5.10 and Table 5.11 revised
		35	Table 5.13, Note 1 revised
		36	Table 5.14 revised
		39	Table 5.19, Note 1 revised
		40	Table 5.20 revised
		43	Table 5.25, Note 1 revised
		44	Table 5.26 revised

All trademarks and registered trademarks are the property of their respective owners.

General Precautions in the Handling of MPU/MCU Products

The following usage notes are applicable to all MPU/MCU products from Renesas. For detailed usage notes on the products covered by this manual, refer to the relevant sections of the manual. If the descriptions under General Precautions in the Handling of MPU/MCU Products and in the body of the manual differ from each other, the description in the body of the manual takes precedence.

1. Handling of Unused Pins

   Handle unused pins in accord with the directions given under Handling of Unused Pins in the manual.

   — The input pins of CMOS products are generally in the high-impedance state. In operation with an unused pin in the open-circuit state, extra electromagnetic noise is induced in the vicinity of LSI, an associated shoot-through current flows internally, and malfunctions occur due to the false recognition of the pin state as an input signal become possible. Unused pins should be handled as described under Handling of Unused Pins in the manual.

2. Processing at Power-on

   The state of the product is undefined at the moment when power is supplied.

   — The states of internal circuits in the LSI are indeterminate and the states of register settings and pins are undefined at the moment when power is supplied.

     In a finished product where the reset signal is applied to the external reset pin, the states of pins are not guaranteed from the moment when power is supplied until the reset process is completed.

     In a similar way, the states of pins in a product that is reset by an on-chip power-on reset function are not guaranteed from the moment when power is supplied until the power reaches the level at which resetting has been specified.

3. Prohibition of Access to Reserved Addresses

   Access to reserved addresses is prohibited.

   — The reserved addresses are provided for the possible future expansion of functions. Do not access these addresses; the correct operation of LSI is not guaranteed if they are accessed.

4. Clock Signals

   After applying a reset, only release the reset line after the operating clock signal has become stable. When switching the clock signal during program execution, wait until the target clock signal has stabilized.

   — When the clock signal is generated with an external resonator (or from an external oscillator) during a reset, ensure that the reset line is only released after full stabilization of the clock signal. Moreover, when switching to a clock signal produced with an external resonator (or by an external oscillator) while program execution is in progress, wait until the target clock signal is stable.

5. Differences between Products

   Before changing from one product to another, i.e. to one with a different part number, confirm that the change will not lead to problems.

   — The characteristics of MPU/MCU in the same group but having different part numbers may differ because of the differences in internal memory capacity and layout pattern. When changing to products of different part numbers, implement a system-evaluation test for each of the products.