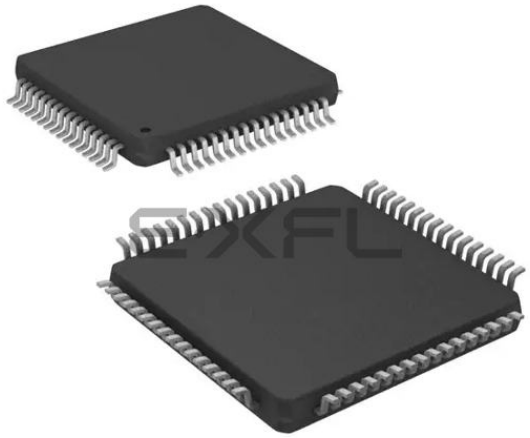

Welcome to E-XFL.COM

What is "Embedded - Microcontrollers"?

"Embedded - Microcontrollers" refer to small, integrated circuits designed to perform specific tasks within larger systems. These microcontrollers are essentially compact computers on a single chip, containing a processor core, memory, and programmable input/output peripherals. They are called "embedded" because they are embedded within electronic devices to control various functions, rather than serving as standalone computers. Microcontrollers are crucial in modern electronics, providing the intelligence and control needed for a wide range of applications.

Applications of "Embedded - Microcontrollers"

Details	
Product Status	Active
Core Processor	PIC
Core Size	8-Bit
Speed	40MHz
Connectivity	I²C, SPI, UART/USART
Peripherals	Brown-out Detect/Reset, HLVD, POR, PWM, WDT
Number of I/O	54
Program Memory Size	96KB (48K x 16)
Program Memory Type	FLASH
EEPROM Size	1K x 8
RAM Size	3.8K x 8
Voltage - Supply (Vcc/Vdd)	4.2V ~ 5.5V
Data Converters	A/D 12x12b
Oscillator Type	Internal
Operating Temperature	-40°C ~ 85°C (TA)
Mounting Type	Surface Mount
Package / Case	64-TQFP
Supplier Device Package	64-TQFP (10x10)
Purchase URL	https://www.e-xfl.com/product-detail/microchip-technology/pic18f6628t-i-pt

TABLE 1-1: DEVICE FEATURES

Features	PIC18F6628	PIC18F6723	PIC18F8628	PIC18F8723
Operating Frequency	DC – 40 MHz	DC – 40 MHz	DC – 40 MHz	DC – 40 MHz
Program Memory (Bytes)	96K	128K	96K	128K
Program Memory (Instructions)	49152	65536	49152	65536
Data Memory (Bytes)	3936	3936	3936	3936
Data EEPROM Memory (Bytes)	1024	1024	1024	1024
Interrupt Sources	28	28	29	29
I/O Ports	Ports A, B, C, D, E, F, G	Ports A, B, C, D, E, F, G	Ports A, B, C, D, E, F, G, H, J	Ports A, B, C, D, E, F, G, H, J
Timers	5	5	5	5
Capture/Compare/PWM Modules	2	2	2	2
Enhanced Capture/Compare/ PWM Modules	3	3	3	3
Enhanced USART	2	2	2	2
Serial Communications	MSSP, Enhanced USART	MSSP, Enhanced USART	MSSP, Enhanced USART	MSSP, Enhanced USART
Parallel Communications (PSP)	Yes	Yes	Yes	Yes
12-Bit Analog-to-Digital Module	12 Input Channels	12 Input Channels	16 Input Channels	16 Input Channels
Resets (and Delays)	POR, BOR, RESETInstruction, Stack Full, Stack Underflow (PWRT, OST), $\overline{\text{MCLR}}$ (optional), WDT	POR, BOR, RESETInstruction,		

¤ 2009 Microchip Technology Inc.

FIGURE 1-2: PIC18F8628/8723 (80-PIN) BLOCK DIAGRAM

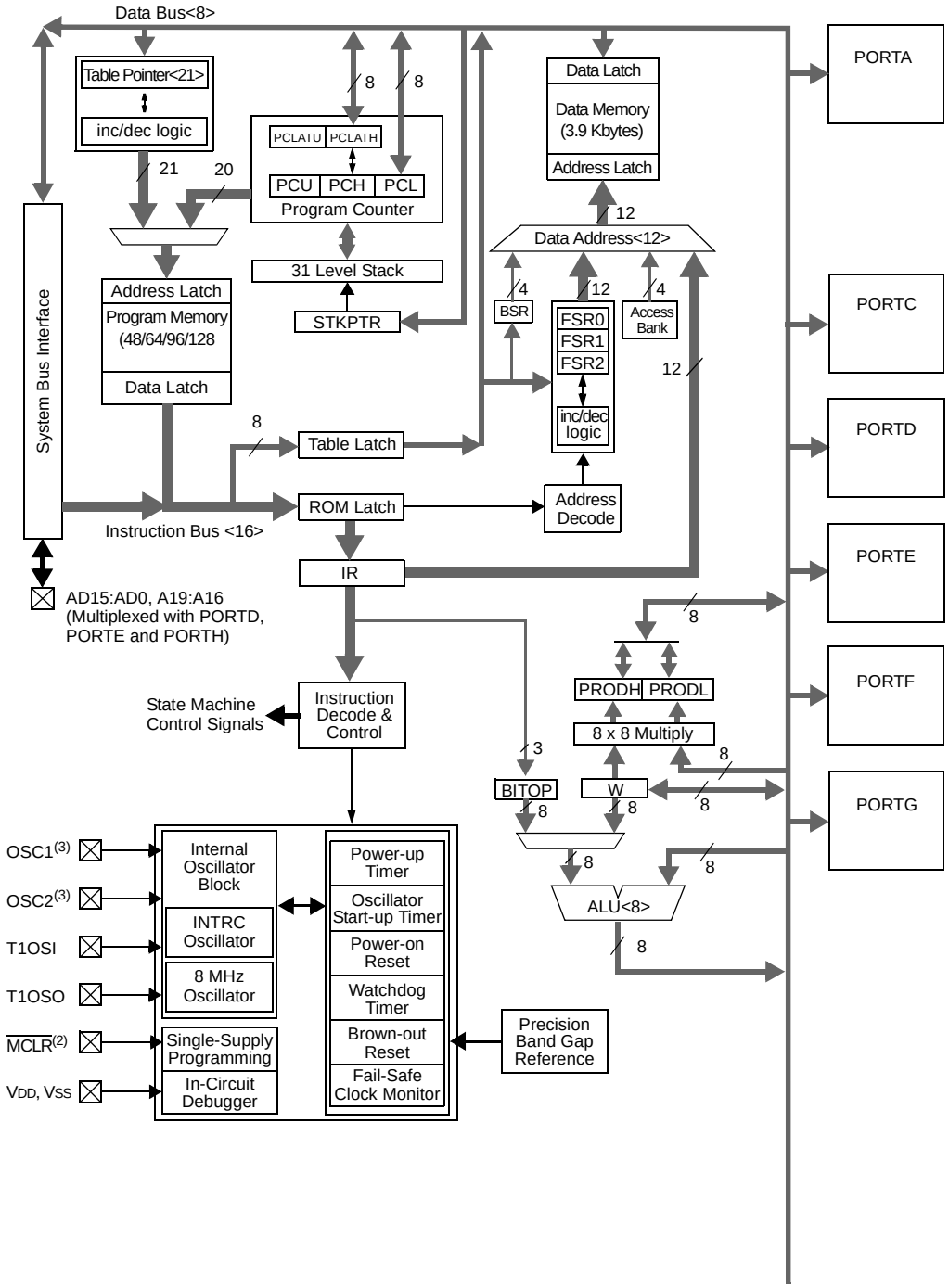

¤ 2009 Microchip Technology Inc.

TABLE 1-3: PIC18F8628/8723 (80-PIN) PINOUT I/O DESCRIPTIONS (CONTINUED)

Pin Name	Pin Number TQFP	Pin Type	Buffer Type	Description
				PORTA is a bidirectional I/O port.
RA0/AN0	30			
RA0		I/O	TTL	Digital I/O.
AN0		I	Analog	Analog input 0.
RA1/AN1	29			
RA1		I/O	TTL	Digital I/O.
AN1		I	Analog	Analog input 1.
RA2/AN2/VREF-	28			
RA2		I/O	TTL	Digital I/O.
AN2		I	Analog	Analog input 2.
VREF-		I	Analog	A/D reference voltage (low) input.
RA3/AN3/VREF+	27			
RA3		I/O	TTL	Digital I/O.
AN3		I	Analog	Analog input 3.
VREF+		I	Analog	A/D reference voltage (high) input.
RA4/T0CKI	34			
RA4		I/O	ST	Digital I/O.
T0CKI		I	ST	Timer0 external clock input.
RA5/AN4/HLVDIN	33			
RA5		I/O	TTL	Digital I/O.
AN4		I	Analog	Analog input 4.
HLVDIN		I	Analog	High/Low-Voltage Detect input.
RA6				See the OSC2/CLKO/RA6 pin.
RA7				See the OSC1/CLKI/RA7 pin.

Legend: TTL = TTL compatible input; ST = Schmitt Trigger input with CMOS levels; I = Input; P = Power; CMOS = CMOS compatible input or output; Analog = Analog input; O = Output; I^2C™/SMB = I^2C/SMBus input buffer

Note 1: Alternate assignment for ECCP2 when Configuration bit, CCP2MX, is cleared (all operating modes except Microcontroller mode).
2: Default assignment for ECCP2 in all operating modes (CCP2MX is set).
3: Alternate assignment for ECCP2 when CCP2MX is cleared (Microcontroller mode only).
4: Default assignment for P1B/P1C/P3B/P3C (ECCPMX is set).
5: Alternate assignment for P1B/P1C/P3B/P3C (ECCPMX is clear).

¤ 2009 Microchip Technology Inc.

TABLE 1-3: PIC18F8628/8723 (80-PIN) PINOUT I/O DESCRIPTIONS (CONTINUED)

Pin Name	Pin Number TQFP	Pin Type	Buffer Type	Description
				PORTB is a bidirectional I/O port. PORTB can be software programmed for internal weak pull-ups on all inputs.
RB0/INT0/FLT0	58			
RB0		I/O	TTL	Digital I/O.
INT0		I	ST	External interrupt 0.
FLT0		I	ST	PWM Fault input for ECCPx.
RB1/INT1	57			
RB1		I/O	TTL	Digital I/O.
INT1		I	ST	External interrupt 1.
RB2/INT2	56			
RB2		I/O	TTL	Digital I/O.
INT2		I	ST	External interrupt 2.
RB3/INT3/ECCP2/P2A	55			
RB3		I/O	TTL	Digital I/O.
INT3		I	ST	External interrupt 3.
ECCP2(1)		O	—	Enhanced Capture 2 input/Compare 2 output/ PWM2 output.
P2A(1)		O	—	ECCP2 PWM output A.
RB4/KBI0	54			
RB4		I/O	TTL	Digital I/O.
KBI0		I	TTL	Interrupt-on-change pin.
RB5/KBI1/PGM	53			
RB5		I/O	TTL	Digital I/O.
KBI1		I	TTL	Interrupt-on-change pin.
PGM		I/O	ST	Low-Voltage ICSP™ Programming enable pin.
RB6/KBI2/PGC	52			
RB6		I/O	TTL	Digital I/O.
KBI2		I	TTL	Interrupt-on-change pin.
PGC		I/O	ST	In-Circuit Debugger and ICSP™ programming clock pin.
RB7/KBI3/PGD	47			
RB7		I/O	TTL	Digital I/O.
KBI3		I	TTL	Interrupt-on-change pin.
PGD		I/O	ST	In-Circuit Debugger and ICSP programming data pin.

Legend: TTL = TTL compatible input; ST = Schmitt Trigger input with CMOS levels; I = Input; P = Power; CMOS = CMOS compatible input or output; Analog = Analog input; O = Output; I^2C™/SMB = I^2C/SMBus input buffer

Note 1: Alternate assignment for ECCP2 when Configuration bit, CCP2MX, is cleared (all operating modes except Microcontroller mode).
2: Default assignment for ECCP2 in all operating modes (CCP2MX is set).
3: Alternate assignment for ECCP2 when CCP2MX is cleared (Microcontroller mode only).
4: Default assignment for P1B/P1C/P3B/P3C (ECCPMX is set).
5: Alternate assignment for P1B/P1C/P3B/P3C (ECCPMX is clear).

TABLE 1-3: PIC18F8628/8723 (80-PIN) PINOUT I/O DESCRIPTIONS (CONTINUED)

Pin Name	Pin Number TQFP	Pin Type	Buffer Type	Description
				PORTE is a bidirectional I/O port.
RE0/AD8/$\overline{RD}$/P2D	4			
RE0		I/O	ST	Digital I/O.
AD8		I/O	TTL	External memory address/data 8.
$\overline{RD}$		I	TTL	Read control for Parallel Slave Port.
P2D		O	—	ECCP2 PWM output D.
RE1/AD9/$\overline{WR}$/P2C	3			
RE1		I/O	ST	Digital I/O.
AD9		I/O	TTL	External memory address/data 9.
$\overline{WR}$		I	TTL	Write control for Parallel Slave Port.
P2C		O	—	ECCP2 PWM output C.
RE2/AD10/$\overline{CS}$/P2B	78			
RE2		I/O	ST	Digital I/O.
AD10		I/O	TTL	External memory address/data 10.
$\overline{CS}$		I	TTL	Chip select control for Parallel Slave Port.
P2B		O	—	ECCP2 PWM output B.
RE3/AD11/P3C	77			
RE3		I/O	ST	Digital I/O.
AD11		I/O	TTL	External memory address/data 11.
P3C(4)		O	—	ECCP3 PWM output C.
RE4/AD12/P3B	76			
RE4		I/O	ST	Digital I/O.
AD12		I/O	TTL	External memory address/data 12.
P3B(4)		O	—	ECCP3 PWM output B.
RE5/AD13/P1C	75			
RE5		I/O	ST	Digital I/O.
AD13		I/O	TTL	External memory address/data 13.
P1C(4)		O	—	ECCP1 PWM output C.
RE6/AD14/P1B	74			
RE6		I/O	ST	Digital I/O.
AD14		I/O	TTL	External memory address/data 14.
P1B(4)		O	—	ECCP1 PWM output B.
RE7/AD15/ECCP2/P2A	73			
RE7		I/O	ST	Digital I/O.
AD15		I/O	TTL	External memory address/data 15.
ECCP2(3)		I/O	ST	Enhanced Capture 2 input/Compare 2 output/ PWM2 output.
P2A(3)		O	—	ECCP2 PWM output A.

Legend: TTL = TTL compatible input; ST = Schmitt Trigger input with CMOS levels; I = Input; P = Power; CMOS = CMOS compatible input or output; Analog = Analog input; O = Output; I^2C™/SMB = I^2C/SMBus input buffer

Note 1: Alternate assignment for ECCP2 when Configuration bit, CCP2MX, is cleared (all operating modes except Microcontroller mode).
2: Default assignment for ECCP2 in all operating modes (CCP2MX is set).
3: Alternate assignment for ECCP2 when CCP2MX is cleared (Microcontroller mode only).
4: Default assignment for P1B/P1C/P3B/P3C (ECCPMX is set).
5: Alternate assignment for P1B/P1C/P3B/P3C (ECCPMX is clear).

¤ 2009 Microchip Technology Inc.

TABLE 1-3: PIC18F8628/8723 (80-PIN) PINOUT I/O DESCRIPTIONS (CONTINUED)

Pin Name	Pin Number TQFP	Pin Type	Buffer Type	Description
				PORTF is a bidirectional I/O port.
RF0/AN5	24			
RF0		I/O	ST	Digital I/O.
AN5		I	Analog	Analog input 5.
RF1/AN6/C2OUT	23			
RF1		I/O	ST	Digital I/O.
AN6		I	Analog	Analog input 6.
C2OUT		O	—	Comparator 2 output.
RF2/AN7/C1OUT	18			
RF2		I/O	ST	Digital I/O.
AN7		I	Analog	Analog input 7.
C1OUT		O	—	Comparator 1 output.
RF3/AN8	17			
RF3		I/O	ST	Digital I/O.
AN8		I	Analog	Analog input 8.
RF4/AN9	16			
RF4		I/O	ST	Digital I/O.
AN9		I	Analog	Analog input 9.
RF5/AN10/CVREF	15			
RF5		I/O	ST	Digital I/O.
AN10		I	Analog	Analog input 10.
CVREF		O	Analog	Comparator reference voltage output.
RF6/AN11	14			
RF6		I/O	ST	Digital I/O.
AN11		I	Analog	Analog input 11.
RF7/$\overline{SS1}$	13			
RF7		I/O	ST	Digital I/O.
$\overline{SS1}$		I	TTL	SPI slave select input.

Legend: TTL = TTL compatible input; ST = Schmitt Trigger input with CMOS levels; I = Input; P = Power; CMOS = CMOS compatible input or output; Analog = Analog input; O = Output; I^2C™/SMB = I^2C/SMBus input buffer

Note 1: Alternate assignment for ECCP2 when Configuration bit, CCP2MX, is cleared (all operating modes except Microcontroller mode).
2: Default assignment for ECCP2 in all operating modes (CCP2MX is set).
3: Alternate assignment for ECCP2 when CCP2MX is cleared (Microcontroller mode only).
4: Default assignment for P1B/P1C/P3B/P3C (ECCPMX is set).
5: Alternate assignment for P1B/P1C/P3B/P3C (ECCPMX is clear).

TABLE 1-3: PIC18F8628/8723 (80-PIN) PINOUT I/O DESCRIPTIONS (CONTINUED)

Pin Name	Pin Number TQFP	Pin Type	Buffer Type	Description
				PORTH is a bidirectional I/O port.
RH0/A16	79			
RH0		I/O	ST	Digital I/O.
A16		I/O	TTL	External memory address/data 16.
RH1/A17	80			
RH1		I/O	ST	Digital I/O.
A17		I/O	TTL	External memory address/data 17.
RH2/A18	1			
RH2		I/O	ST	Digital I/O.
A18		I/O	TTL	External memory address/data 18.
RH3/A19	2			
RH3		I/O	ST	Digital I/O.
A19		I/O	TTL	External memory address/data 19.
RH4/AN12/P3C	22			
RH4		I/O	ST	Digital I/O.
AN12		I	Analog	Analog input 12.
P3C(5)		O	—	ECCP3 PWM output C.
RH5/AN13/P3B	21			
RH5		I/O	ST	Digital I/O.
AN13		I	Analog	Analog input 13.
P3B(5)		O	—	ECCP3 PWM output B.
RH6/AN14/P1C	20			
RH6		I/O	ST	Digital I/O.
AN14		I	Analog	Analog input 14.
P1C(5)		O	—	ECCP1 PWM output C.
RH7/AN15/P1B	19			
RH7		I/O	ST	Digital I/O.
AN15		I	Analog	Analog input 15.
P1B(5)		O	—	ECCP1 PWM output B.

Legend: TTL = TTL compatible input; ST = Schmitt Trigger input with CMOS levels; I = Input; P = Power; CMOS = CMOS compatible input or output; Analog = Analog input; O = Output; I^2C™/SMB = I^2C/SMBus input buffer

Note 1: Alternate assignment for ECCP2 when Configuration bit, CCP2MX, is cleared (all operating modes except Microcontroller mode).

2: Default assignment for ECCP2 in all operating modes (CCP2MX is set).

3: Alternate assignment for ECCP2 when CCP2MX is cleared (Microcontroller mode only).

4: Default assignment for P1B/P1C/P3B/P3C (ECCPMX is set).

5: Alternate assignment for P1B/P1C/P3B/P3C (ECCPMX is clear).

TABLE 1-3: PIC18F8628/8723 (80-PIN) PINOUT I/O DESCRIPTIONS (CONTINUED)

Pin Name	Pin Number TQFP	Pin Type	Buffer Type	Description
				PORTJ is a bidirectional I/O port.
RJ0/ALE	62			
RJ0		I/O	ST	Digital I/O.
ALE		O	—	External memory address latch enable.
RJ1/$\overline{OE}$	61			
RJ1		I/O	ST	Digital I/O.
$\overline{OE}$		O	—	External memory output enable.
RJ2/$\overline{WRL}$	60			
RJ2		I/O	ST	Digital I/O.
$\overline{WRL}$		O	—	External memory write low control.
RJ3/$\overline{WRH}$	59			
RJ3		I/O	ST	Digital I/O.
$\overline{WRH}$		O	—	External memory write high control.
RJ4/BA0	39			
RJ4		I/O	ST	Digital I/O.
BA0		O	—	External memory byte address 0 control.
RJ5/$\overline{CE}$	40			
RJ4		I/O	ST	Digital I/O
$\overline{CE}$		O	—	External memory chip enable control.
RJ6/$\overline{LB}$	41			
RJ6		I/O	ST	Digital I/O.
$\overline{LB}$		O	—	External memory low byte control.
RJ7/$\overline{UB}$	42			
RJ7		I/O	ST	Digital I/O.
$\overline{UB}$		O	—	External memory high byte control.
VSS	11, 31, 51, 70	P	—	Ground reference for logic and I/O pins.
VDD	12, 32, 48, 71	P	—	Positive supply for logic and I/O pins.
AVSS	26	P	—	Ground reference for analog modules.
AVDD	25	P	—	Positive supply for analog modules.

Legend: TTL = TTL compatible input; ST = Schmitt Trigger input with CMOS levels; I = Input; P = Power; CMOS = CMOS compatible input or output; Analog = Analog input; O = Output; I^2C™/SMB = I^2C/SMBus input buffer

Note 1: Alternate assignment for ECCP2 when Configuration bit, CCP2MX, is cleared (all operating modes except Microcontroller mode).

2: Default assignment for ECCP2 in all operating modes (CCP2MX is set).

3: Alternate assignment for ECCP2 when CCP2MX is cleared (Microcontroller mode only).

4: Default assignment for P1B/P1C/P3B/P3C (ECCPMX is set).

5: Alternate assignment for P1B/P1C/P3B/P3C (ECCPMX is clear).

¤ 2009 Microchip Technology Inc.

The analog reference voltage is software selectable to either the device's positive and negative supply voltage (V_{DD} and V_{SS}), or the voltage level on the RA3/AN3/V_{REF}+ and RA2/AN2/V_{REF}-/CV_{REF} pins.

The A/D Converter has a unique feature of being able to operate while the device is in Sleep mode. To operate in Sleep, the A/D conversion clock must be derived from the A/D's internal RC oscillator.

The output of the sample and hold is the input into the converter, which generates the result via successive approximation.

A device Reset forces all registers to their Reset state. This forces the A/D module to be turned off and any conversion in progress is aborted.

Each port pin associated with the A/D Converter can be configured as an analog input or a digital I/O. The ADRESH and ADRESL registers contain the result of the A/D conversion. When the A/D conversion is complete, the result is loaded into the ADRESH:ADRESL register pair, the GO/$\overline{\text{DONE}}$ bit (ADCON0<1>) is cleared and the A/D Interrupt Flag bit, ADIF, is set. The block diagram of the A/D module is shown in Figure 2-1.

FIGURE 2-1: A/D BLOCK DIAGRAM

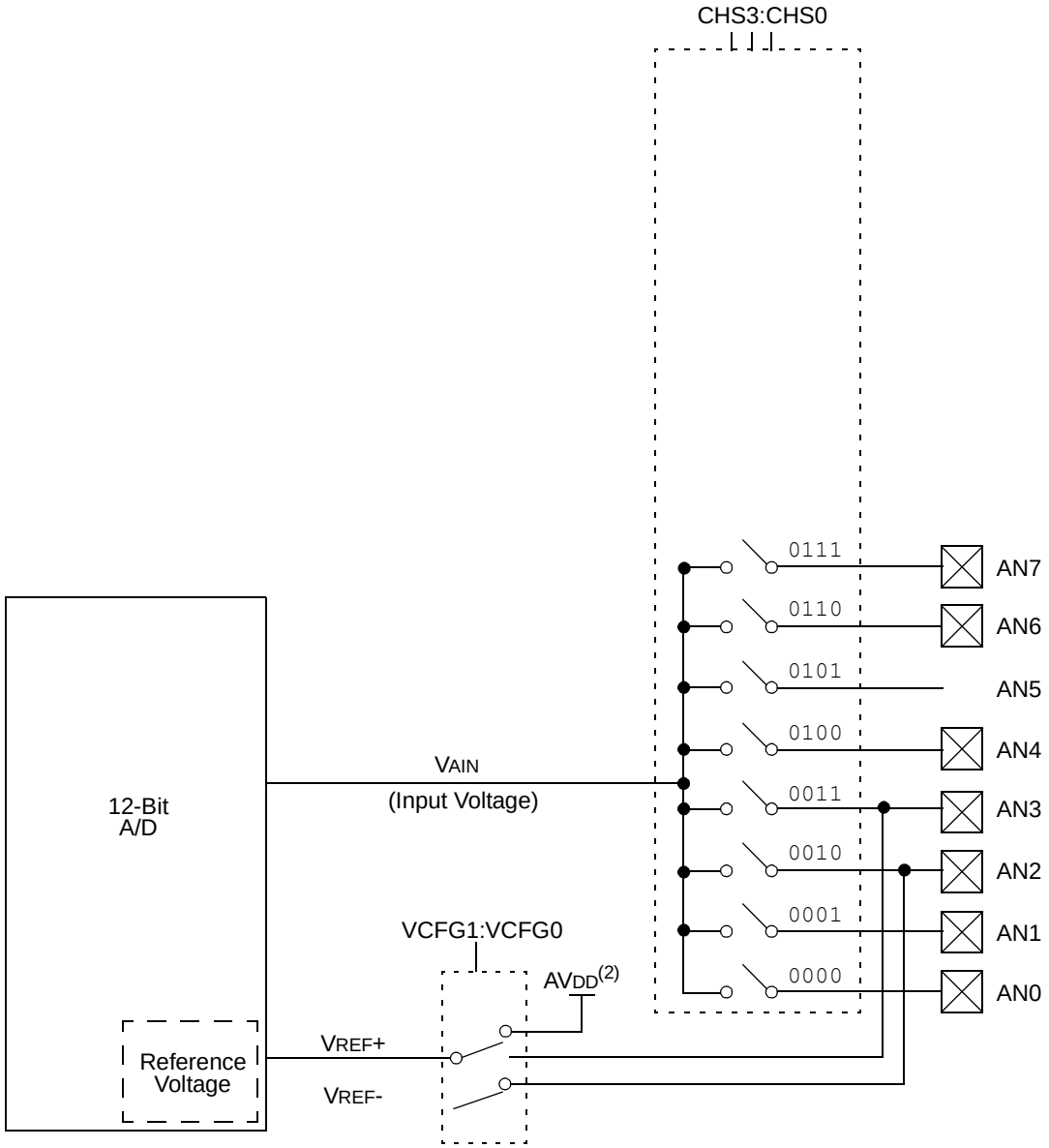

¤ 2009 Microchip Technology Inc.

2.4 Operation in Power-Managed Modes

The selection of the automatic acquisition time and A/D conversion clock is determined in part by the clock source and frequency while in a power-managed mode.

If the A/D is expected to operate while the device is in a power-managed mode, the ADCS2:ADCS0 bits in ADCON2 should be updated in accordance with the clock source to be used. The ACQT2:ACQT0 bits do not need to be adjusted as the ADCS2:ADCS0 bits adjust the T_{AD} time for the new clock speed. After entering the mode, an A/D acquisition or conversion may be started. Once started, the device should continue to be clocked by the same clock source until the conversion has been completed.

If desired, the device may be placed into the corresponding Idle mode during the conversion. If the device clock frequency is less than 1 MHz, the A/D RC clock source should be selected.

Operation in Sleep mode requires the A/D F_{RC} clock to be selected. If the ACQT2:ACQT0 bits are set to '`000`' and a conversion is started, the conversion will be delayed one instruction cycle to allow execution of the `SLEEP` instruction and entry to Sleep mode. The IDLEN bit (OSCCON<7>) must have already been cleared prior to starting the conversion.

2.5 Configuring Analog Port Pins

The ADCON1, TRISA, TRISF and TRISH registers all configure the A/D port pins. The port pins needed as analog inputs must have their corresponding TRIS bits set (input). If the TRIS bit is cleared (output), the digital output level (V_{OH} or V_{OL}) will be converted.

The A/D operation is independent of the state of the CHS3:CHS0 bits and the TRIS bits.

Note 1:	When reading the PORT register, all pins configured as analog input channels will read as cleared (a low level). Analog conversion on pins configured as digital pins can be performed. The voltage on the pin will be accurately converted.
2:	Analog levels on any pin defined as a digital input may cause the digital input buffer to consume current out of the device's specification limits.

¤ 2009 Microchip Technology Inc.

REGISTER 3-1: DEVID1: DEVICE ID REGISTER 1 FOR PIC18F8723 FAMILY DEVICES

R	R	R	R	R	R	R	R
DEV2	DEV1	DEV0	REV4	REV3	REV2	REV1	REV0
bit 7							bit 0

Legend:		
R = Read-only bit	P = Programmable bit	U = Unimplemented bit, read as ‘0’
-n = Value when device is unprogrammed		u = Unchanged from programmed state

bit 7-5 DEV2:DEV0: Device ID bits
See Register 3-2 for a complete listing.

bit 4-0 REV4:REV0: Revision ID bits
These bits are used to indicate the device revision.

REGISTER 3-2: DEVID2: DEVICE ID REGISTER 2 FOR PIC18F8723 FAMILY DEVICES

R	R	R	R	R	R	R	R
DEV10	DEV9	DEV8	DEV7	DEV6	DEV5	DEV4	DEV3
bit 7							bit 0

Legend:		
R = Read-only bit	P = Programmable bit	U = Unimplemented bit, read as ‘0’
-n = Value when device is unprogrammed		u = Unchanged from programmed state

bit 7-0 DEV10:DEV3: Device ID bits

DEV10:DEV3 (DEVID2<7:0>)	DEV2:DEV0 (DEVID1<7:5>)	Device
0100 1001	110	PIC18F6628
0100 1010	000	PIC18F6723
0100 1001	111	PIC18F8628
0100 1010	001	PIC18F8723

¤ 2009 Microchip Technology Inc.

4.0 ELECTRICAL CHARACTERISTICS

Note: Other than some basic data, this section documents only the PIC18F8723 family's specifications that differ from those of the PIC18F8722 family devices. For detailed information on the electrical specifications shared by the PIC18F8723 family and PIC18F8722 family devices, see the "PIC18F8722 Family Data Sheet" (DS39646).

Absolute Maximum Ratings (†)

Ambient temperature under bias ..... -40°C to +125°C

Storage temperature ..... -65°C to +150°C

Voltage on any pin with respect to V_{SS} (except V_{DD} and $\overline{MCLR}$) ..... -0.3V to (V_{DD} + 0.3V)

Voltage on V_{DD} with respect to V_{SS} ..... -0.3V to +7.5V

Voltage on $\overline{MCLR}$ with respect to V_{SS} (Note 2) ..... 0V to +13.25V

Total power dissipation (Note 1) 1.0W

Maximum current out of V_{SS} pin ..... 300 mA

Maximum current into V_{DD} pin ..... 250 mA

Input clamp current, I_{IK} (V_I < 0 or V_I > V_{DD}) 20 mA

Output clamp current, I_{OK} (V_O < 0 or V_O > V_{DD}) 20 mA

Maximum output current sunk by any I/O pin ..... 25 mA

Maximum output current sourced by any I/O pin ..... 25 mA

Maximum current sunk by all ports ..... 200 mA

Maximum current sourced by all ports ..... 200 mA

Note 1: Power dissipation is calculated as follows:
$P_{dis} = V_{DD} \times \{I_{DD} - \sum I_{OH}\} + \sum \{(V_{DD} - V_{OH}) \times I_{OH}\} + \sum (V_{OL} \times I_{OL})$

2: Voltage spikes below V_{SS} at the RG5/$\overline{MCLR}$/V_{PP} pin, inducing currents greater than 80 mA, may cause latch-up. Thus, a series resistor of 50-100 : should be used when applying a "low" level to the RG5/$\overline{MCLR}$/V_{PP} pin, rather than pulling this pin directly to V_{SS}.

† NOTICE: Stresses above those listed under "Absolute Maximum Ratings" may cause permanent damage to the device. This is a stress rating only and functional operation of the device at those or any other conditions above those indicated in the operation listings of this specification is not implied. Exposure to maximum rating conditions for extended periods may affect device reliability.

5.0 PACKAGING INFORMATION

For packaging information, see the “PIC18F8722 Family Data Sheet” (DS39646).

NOTES:

¤ 2009 Microchip Technology Inc.

PIC18F8723 FAMILY PRODUCT IDENTIFICATION SYSTEM

To order or obtain information, e.g., on pricing or delivery, refer to the factory or the listed sales office.

PART NO.	X	/XX	XXX
Device	Temperature Range	Package	Pattern

Device[1] [2]	PIC18F6628/6723, PIC18F8628/8723, V_{DD} range 4.2V to 5.5V PIC18LF6628/6723, PIC18LF6628/6723(V_{DD} range 2.0V to 5.5V
Temperature Range	I = -40 ¢C to +85 ¢C (Industrial) E = -40 ¢C to +125 ¢C (Extended)
Package	PT = TQFP (Thin Quad Flatpack)
Pattern	QTP, SQTP, Code or Special Requirements (blank otherwise)

Examples:

a) PIC18LF6723-I/PT 301 = Industrial temp., TQFP package, Extended V_{DD} limits, QTP pattern #301.

b) PIC18F6723-E/PT = Extended temp., TQFP package, standard V_{DD} limits.

Note 1: F = Standard Voltage Range
LF = Wide Voltage Range
2: T = in tape and reel TQFP packages only.