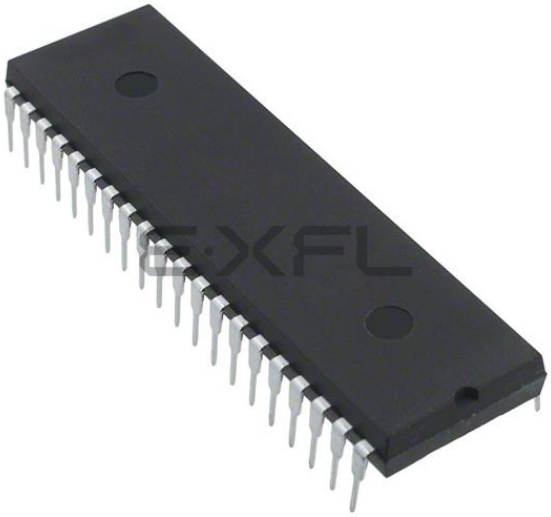

Welcome to E-XFL.COM

What is "Embedded - Microcontrollers"?

"Embedded - Microcontrollers" refer to small, integrated circuits designed to perform specific tasks within larger systems. These microcontrollers are essentially compact computers on a single chip, containing a processor core, memory, and programmable input/output peripherals. They are called "embedded" because they are embedded within electronic devices to control various functions, rather than serving as standalone computers. Microcontrollers are crucial in modern electronics, providing the intelligence and control needed for a wide range of applications.

Applications of "Embedded - Microcontrollers"

Details	
Product Status	Obsolete
Core Processor	80C51
Core Size	8-Bit
Speed	60MHz
Connectivity	SPI, UART/USART
Peripherals	POR, PWM, WDT
Number of I/O	32
Program Memory Size	16KB (16K x 8)
Program Memory Type	FLASH
EEPROM Size	-
RAM Size	1.25K x 8
Voltage - Supply (Vcc/Vdd)	2.7V ~ 5.5V
Data Converters	-
Oscillator Type	External
Operating Temperature	-40°C ~ 85°C (TA)
Mounting Type	Through Hole
Package / Case	40-DIP (0.600", 15.24mm)
Supplier Device Package	40-PDIL
Purchase URL	https://www.e-xfl.com/product-detail/microchip-technology/at89c51rb2-3csim

Oscillator

To optimize the power consumption and execution time needed for a specific task, an internal, prescaler feature has been implemented between the oscillator and the CPU and peripherals.

Registers

Table 13. CKRL Register

CKRL – Clock Reload Register (97h)

7	6	5	4	3	2	1	0
CKRL7	CKRL6	CKRL5	CKRL4	CKRL3	CKRL2	CKRL1	CKRL0

Bit Number	Mnemonic	Description
7:0	CKRL	**Clock Reload Register** Prescaler value

Reset Value = 1111 1111b
Not bit addressable

Table 14. PCON Register

PCON – Power Control Register (87h)

7	6	5	4	3	2	1	0
SMOD1	SMOD0	-	POF	GF1	GF0	PD	IDL

Bit Number	Bit Mnemonic	Description
7	SMOD1	**Serial Port Mode bit 1** Set to select double baud rate in mode 1, 2 or 3.
6	SMOD0	**Serial Port Mode bit 0** Cleared to select SM0 bit in SCON register. Set to select FE bit in SCON register.
5	-	**Reserved** The value read from this bit is indeterminate. Do not set this bit.
4	POF	**Power-off Flag** Cleared to recognize next reset type. Set by hardware when V_{CC} rises from 0 to its nominal voltage. Can also be set by software.
3	GF1	**General-purpose Flag** Cleared by software for general-purpose usage. Set by software for general-purpose usage.
2	GF0	**General-purpose Flag** Cleared by software for general-purpose usage. Set by software for general-purpose usage.
1	PD	**Power-down Mode bit** Cleared by hardware when reset occurs. Set to enter power-down mode.
0	IDL	**Idle Mode bit** Cleared by hardware when interrupt or reset occurs. Set to enter idle mode.

Reset Value = 00X1 0000b Not bit addressable

Table 16. CKCON1 Register

CKCON1 - Clock Control Register (AFh)

7	6	5	4	3	2	1	0
-	-	-	-	-	-	-	SPIX2

Bit Number	Bit Mnemonic	Description
7	-	**Reserved**
6	-	**Reserved**
5	-	**Reserved**
4	-	**Reserved**
3	-	**Reserved**
2	-	**Reserved**
1	-	**Reserved**
0	SPIX2	**SPI** (This control bit is validated when the CPU clock X2 is set; when X2 is low, this bit has no effect). Clear to select 6 clock periods per peripheral clock cycle. Set to select 12 clock periods per peripheral clock cycle.

Reset Value = XXXX XXX0b
Not bit addressable

Figure 11. PCA Timer/Counter

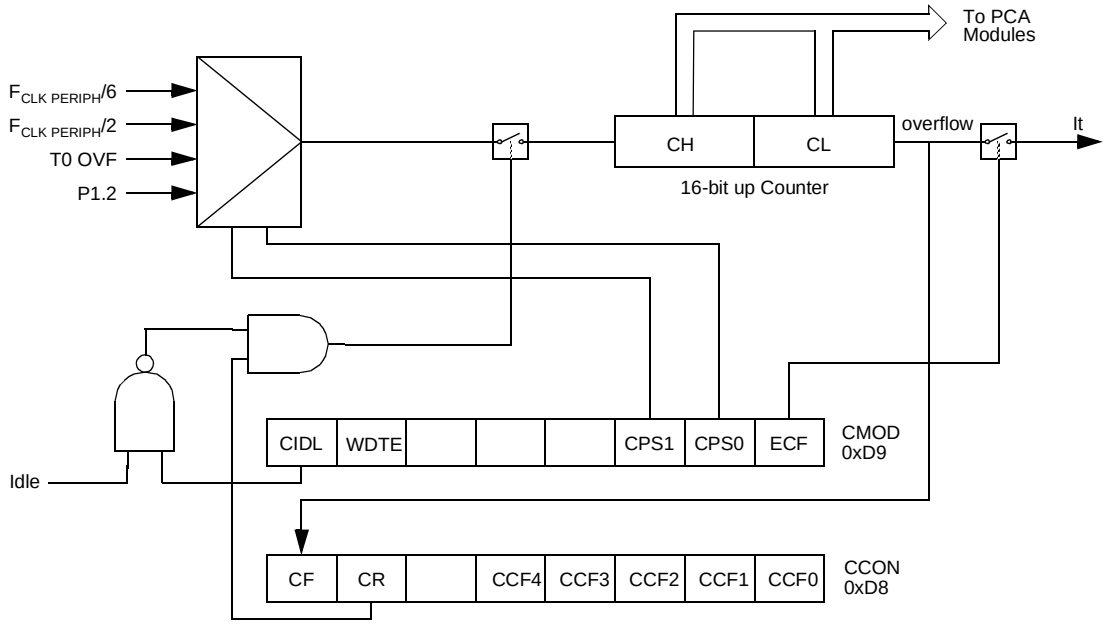

Table 24. CCAPMn Registers (n = 0-4)

CCAPM0 – PCA Module 0 Compare/Capture Control Register (0DAh)

CCAPM1 – PCA Module 1 Compare/Capture Control Register (0DBh)

CCAPM2 – PCA Module 2 Compare/Capture Control Register (0DCh)

CCAPM3 – PCA Module 3 Compare/Capture Control Register (0DDh)

CCAPM4 – PCA Module 4 Compare/Capture Control Register (0DEh)

7	6	5	4	3	2	1	0
-	ECOMn	CAPPn	CAPNn	MATn	TOGn	PWMn	ECCFn

Bit Number	Bit Mnemonic	Description
7	-	**Reserved** The value read from this bit is indeterminate. Do not set this bit.
6	ECOMn	**Enable Comparator** Cleared to disable the comparator function. Set to enable the comparator function.
5	CAPPn	**Capture Positive** Cleared to disable positive edge capture. Set to enable positive edge capture.
4	CAPNn	**Capture Negative** Cleared to disable negative edge capture. Set to enable negative edge capture.
3	MATn	**Match** When MATn = 1, a match of the PCA counter with this Module's compare/capture register causes the CCFn bit in CCON to be set, flagging an interrupt.
2	TOGn	**Toggle** When TOGn = 1, a match of the PCA counter with this Module's compare/capture register causes theCEXn pin to toggle.
1	PWMn	**Pulse Width Modulation Mode** Cleared to disable the CEXn pin to be used as a pulse width modulated output. Set to enable the CEXn pin to be used as a pulse width modulated output.
0	CCF0	**Enable CCF Interrupt** Cleared to disable compare/capture flag CCFn in the CCON register to generate an interrupt. Set to enable compare/capture flag CCFn in the CCON register to generate an interrupt.

Reset Value = X000 0000b
Not bit addressable

Table 27. CCAPnL Registers (n = 0-4)

CCAP0L – PCA Module 0 Compare/Capture Control Register Low (0EAh)

CCAP1L – PCA Module 1 Compare/Capture Control Register Low (0EBh)

CCAP2L – PCA Module 2 Compare/Capture Control Register Low (0ECh)

CCAP3L – PCA Module 3 Compare/Capture Control Register Low (0EDh)

CCAP4L – PCA Module 4 Compare/Capture Control Register Low (0EEh)

7	6	5	4	3	2	1	0
-	-	-	-	-	-	-	-

Bit Number	Bit Mnemonic	Description
7 - 0	-	**PCA Module n Compare/Capture Control** CCAPnL Value

Reset Value = 0000 0000b
Not bit addressable

Table 28. CH Register

CH – PCA Counter Register High (0F9h)

7	6	5	4	3	2	1	0
-	-	-	-	-	-	-	-

Bit Number	Bit Mnemonic	Description
7 - 0	-	**PCA Counter** CH Value

Reset Value = 0000 0000b
Not bit addressable

Table 29. CL Register

CL – PCA Counter Register Low (0E9h)

7	6	5	4	3	2	1	0
-	-	-	-	-	-	-	-

Bit Number	Bit Mnemonic	Description
7 - 0	-	**PCA Counter** CL Value

Reset Value = 0000 0000b
Not bit addressable

High-speed Output Mode

In this mode the CEX output (on port 1) associated with the PCA module will toggle each time a match occurs between the PCA counter and the modules capture registers. To activate this mode the TOG, MAT, and ECOM bits in the modules CCAPMn SFR must be set (see Figure 15).

A prior write must be done to CCAPnL and CCAPnH before writing the ECOMn bit.

Figure 15. PCA High-speed Output Mode

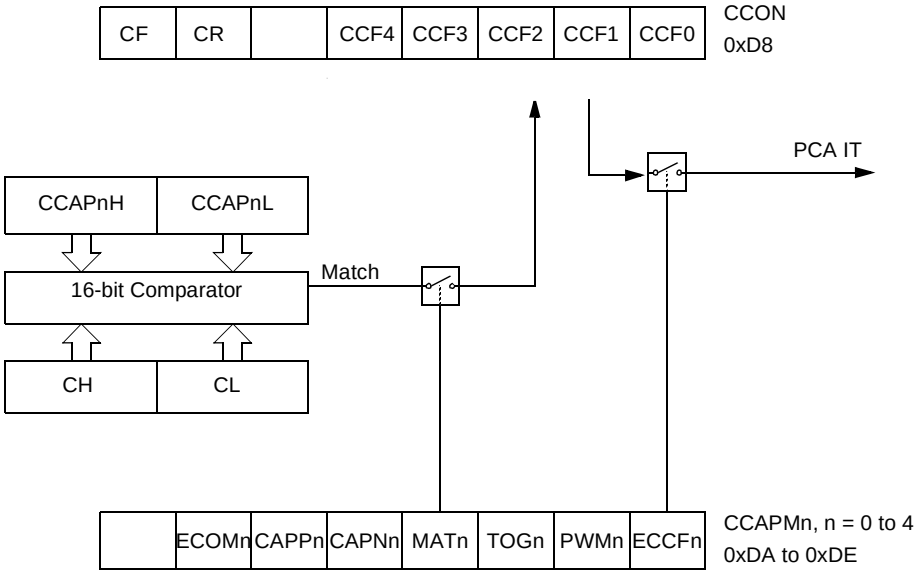

Before enabling ECOM bit, CCAPnL and CCAPnH should be set with a non-zero value, otherwise an unwanted match could occur.

Once ECOM is set, writing CCAPnL will clear ECOM so that an unwanted match doesn't occur while modifying the compare value. Writing to CCAPnH will set ECOM. For this reason, user software should write CCAPnL first, and then CCAPnH. Of course, the ECOM bit can still be controlled by accessing to CCAPMn register.

Table 38. SBUF Register

SBUF - Serial Buffer Register for UART (99h)

7	6	5	4	3	2	1	0

Reset Value = XXXX XXXXb

Table 39. BRL Register

BRL - Baud Rate Reload Register for the internal baud rate generator, UART (9Ah)

7	6	5	4	3	2	1	0

Reset Value = 0000 0000b

Interrupt Sources and Vector Addresses

Table 50. Interrupt Sources and Vector Addresses

Number	Polling Priority	Interrupt Source	Interrupt Request	Vector Address
0	0	Reset		0000h
1	1	INT0	IE0	0003h
2	2	Timer 0	TF0	000Bh
3	3	INT1	IE1	0013h
4	4	Timer 1	IF1	001Bh
5	6	UART	RI+TI	0023h
6	7	Timer 2	TF2+EXF2	002Bh
7	5	PCA	CF + CCFn (n = 0-4)	0033h
8	8	Keyboard	KBDIT	003Bh
9	9	SPI	SPIIT	004Bh

Registers

Table 51. KBF Register

KBF - Keyboard Flag Register (9Eh)

7	6	5	4	3	2	1	0
KBF7	KBF6	KBF5	KBF4	KBF3	KBF2	KBF1	KBF0

Bit Number	Bit Mnemonic	Description
7	KBF7	**Keyboard Line 7 Flag** Set by hardware when the Port line 7 detects a programmed level. It generates a Keyboard interrupt request if the KBKBIE. 7 bit in KBIE register is set. Must be cleared by software.
6	KBF6	**Keyboard Line 6 Flag** Set by hardware when the Port line 6 detects a programmed level. It generates a Keyboard interrupt request if the KBIE. 6 bit in KBIE register is set. Must be cleared by software.
5	KBF5	**Keyboard Line 5 Flag** Set by hardware when the Port line 5 detects a programmed level. It generates a Keyboard interrupt request if the KBIE. 5 bit in KBIE register is set. Must be cleared by software.
4	KBF4	**Keyboard Line 4 Flag** Set by hardware when the Port line 4 detects a programmed level. It generates a Keyboard interrupt request if the KBIE. 4 bit in KBIE register is set. Must be cleared by software.
3	KBF3	**Keyboard Line 3 Flag** Set by hardware when the Port line 3 detects a programmed level. It generates a Keyboard interrupt request if the KBIE. 3 bit in KBIE register is set. Must be cleared by software.
2	KBF2	**Keyboard Line 2 Flag** Set by hardware when the Port line 2 detects a programmed level. It generates a Keyboard interrupt request if the KBIE. 2 bit in KBIE register is set. Must be cleared by software.
1	KBF1	**Keyboard Line 1 Flag** Set by hardware when the Port line 1 detects a programmed level. It generates a Keyboard interrupt request if the KBIE. 1 bit in KBIE register is set. Must be cleared by software.
0	KBF0	**Keyboard Line 0 Flag** Set by hardware when the Port line 0 detects a programmed level. It generates a Keyboard interrupt request if the KBIE. 0 bit in KBIE register is set. Must be cleared by software.

Reset Value = 0000 0000b

This register is read only access, all flags are automatically cleared by reading the register.

drive the network. The Master may select each Slave device by software through port pins (Figure 26). To prevent bus conflicts on the MISO line, only one slave should be selected at a time by the Master for a transmission.

In a Master configuration, the $\overline{SS}$ line can be used in conjunction with the MODF flag in the SPI Status register (SPSTA) to prevent multiple masters from driving MOSI and SCK (see Error conditions).

A high level on the $\overline{SS}$ pin puts the MISO line of a Slave SPI in a high-impedance state.

The $\overline{SS}$ pin could be used as a general-purpose if the following conditions are met:

- The device is configured as a Master and the SSDIS control bit in SPCON is set. This kind of configuration can be found when only one Master is driving the network and there is no way that the $\overline{SS}$ pin could be pulled low. Therefore, the MODF flag in the SPSTA will never be set(1).
- The Device is configured as a Slave with CPHA and SSDIS control bits set(2). This kind of configuration can happen when the system comprises one Master and one Slave only. Therefore, the device should always be selected and there is no reason that the Master uses the $\overline{SS}$ pin to select the communicating Slave device.

Note: 1. Clearing SSDIS control bit does not clear MODF.

2. Special care should be taken not to set SSDIS control bit when CPHA = ’0’ because in this mode, the $\overline{SS}$ is used to start the transmission.

Baud Rate

In Master mode, the baud rate can be selected from a baud rate generator which is controlled by three bits in the SPCON register: SPR2, SPR1 and SPR0.The Master clock is selected from one of seven clock rates resulting from the division of the internal clock by 2, 4, 8, 16, 32, 64 or 128.

Table 54 gives the different clock rates selected by SPR2:SPR1:SPR0.

Table 54. SPI Master Baud Rate Selection

SPR2	SPR1	SPR0	Clock Rate	Baud Rate Divisor (BD)
0	0	0	$F_{CLK\ PERIPH}$ /2	2
0	0	1	$F_{CLK\ PERIPH}$ /4	4
0	1	0	$F_{CLK\ PERIPH}$/8	8
0	1	1	$F_{CLK\ PERIPH}$ /16	16
1	0	0	$F_{CLK\ PERIPH}$ /32	32
1	0	1	$F_{CLK\ PERIPH}$ /64	64
1	1	0	$F_{CLK\ PERIPH}$ /128	128
1	1	1	Don’t Use	No BRG

Functional Description

Figure 26 shows a detailed structure of the SPI Module.

Figure 26. SPI Module Block Diagram

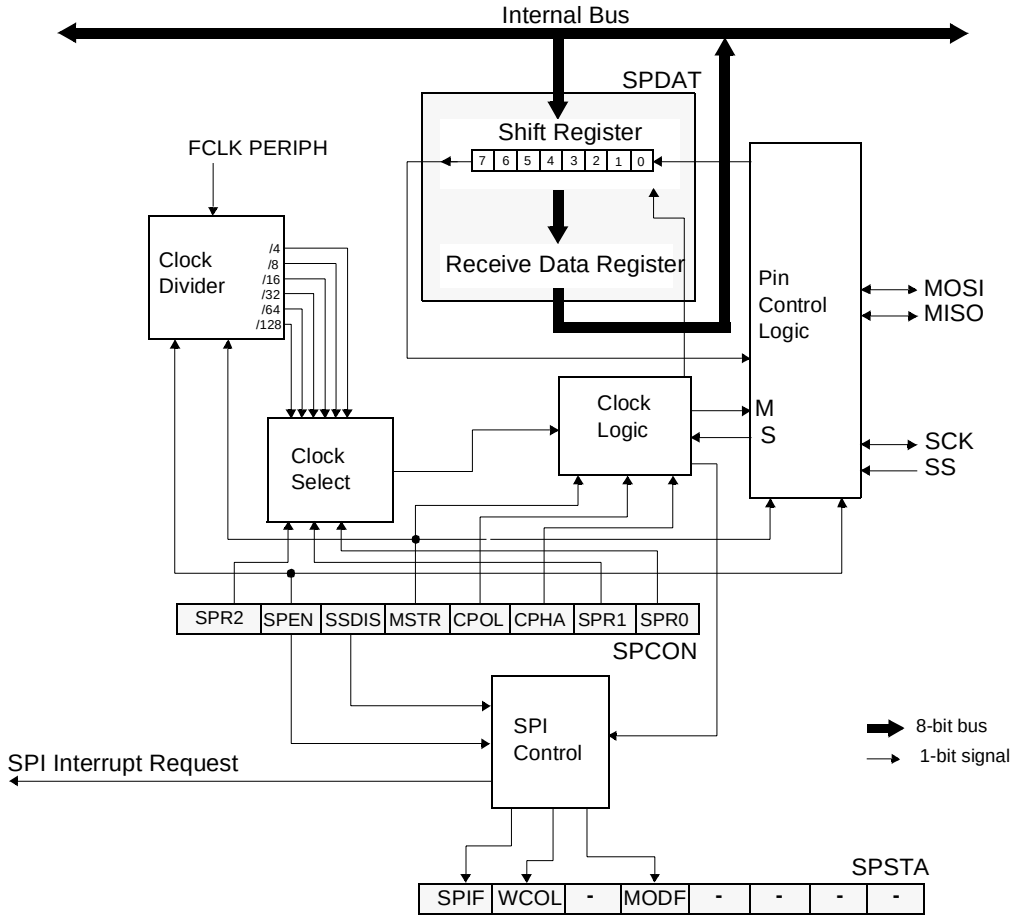

Operating Modes

The Serial Peripheral Interface can be configured in one of the two modes: Master mode or Slave mode. The configuration and initialization of the SPI Module is made through one register:

- The Serial Peripheral Control register (SPCON)

Once the SPI is configured, the data exchange is made using:

- SPCON
- The Serial Peripheral STAtus register (SPSTA)
- The Serial Peripheral DATa register (SPDAT)

During an SPI transmission, data is simultaneously transmitted (shifted out serially) and received (shifted in serially). A serial clock line (SCK) synchronizes shifting and sampling on the two serial data lines (MOSI and MISO). A Slave Select line ($\overline{SS}$) allows individual selection of a Slave SPI device; Slave devices that are not selected do not interfere with SPI bus activities.

When the Master device transmits data to the Slave device via the MOSI line, the Slave device responds by sending data to the Master device via the MISO line. This implies full-duplex transmission with both data out and data in synchronized with the same clock (Figure 27).

Table 66. Program Lock Bits

Program Lock Bits				
Security Level	**LB0**	**LB1**	**LB2**	**Protection Description**
1	U	U	U	No program lock features enabled.
2	P	U	U	MOVC instruction executed from external program memory is disabled from fetching code Bytes from internal memory, $\overline{EA}$ is sampled and latched on reset, and further parallel programming of the Flash is disabled. ISP and software programming with API are still allowed.
3	X	P	U	Same as 2, also verify through parallel programming interface is disabled.
4	X	X	P	Same as 3, also external execution is disabled. (Default)

Note: U: unprogrammed or "one" level.
P: programmed or "zero" level.
X: don't care
WARNING: Security level '2' and '3' should only be programmed after Flash and code verification.

These security bits protect the code access through the parallel programming interface. They are set by default to level 4. The code access through the ISP is still possible and is controlled by the "software security bits" which are stored in the extra Flash memory accessed by the ISP firmware.

To load a new application with the parallel programmer, a chip erase must first be done. This will set the HSB in its inactive state and will erase the Flash memory. The part reference can always be read using Flash parallel programming modes.

Default Values

The default value of the HSB provides parts ready to be programmed with ISP:

- BLJB: Programmed force ISP operation.
- X2: Unprogrammed to force X1 mode (Standard Mode).
- XRAM: Unprogrammed to valid XRAM
- LB2-0: Security level four to protect the code from a parallel access with maximum security.

Software Registers

Several registers are used, in factory and by parallel programmers, to make copies of hardware registers contents. These values are used by Atmel ISP.

These registers are in the "Extra Flash Memory" part of the Flash memory. This block is also called "XAF" or eXtra Array Flash. They are accessed in the following ways:

- Commands issued by the parallel memory programmer.
- Commands issued by the ISP software.
- Calls of API issued by the application software.

Several software registers are described in Table 67.

Blank Check Command

Description

Figure 43. Blank Check Flow

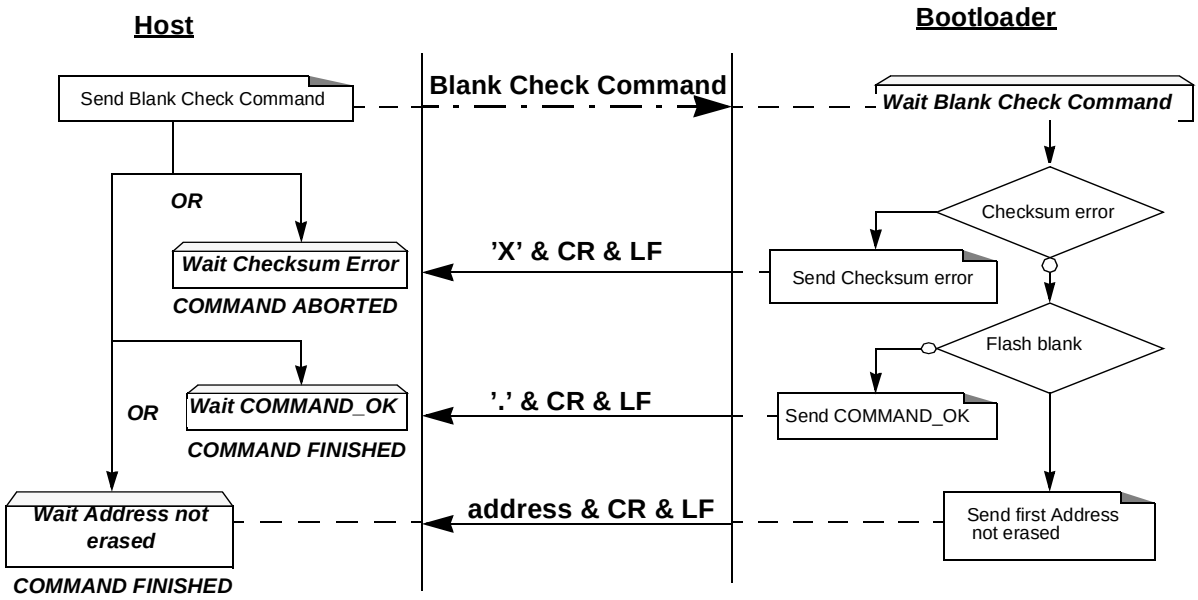

Example

```
Blank Check ok
HOST          : 05 0000 04 0000 7FFF 01 78
BOOTLOADER    : 05 0000 04 0000 7FFF 01 78 . CR LF

Blank Check ko at address xxxx
HOST          : 05 0000 04 0000 7FFF 01 78
BOOTLOADER    : 05 0000 04 0000 7FFF 01 78 xxxx CR LF

Blank Check with checksum error
HOST          : 05 0000 04 0000 7FFF 01 70
BOOTLOADER    : 05 0000 04 0000 7FFF 01 70 X CR LF CR LF
```

Display Data

Description

Figure 44. Display Flow

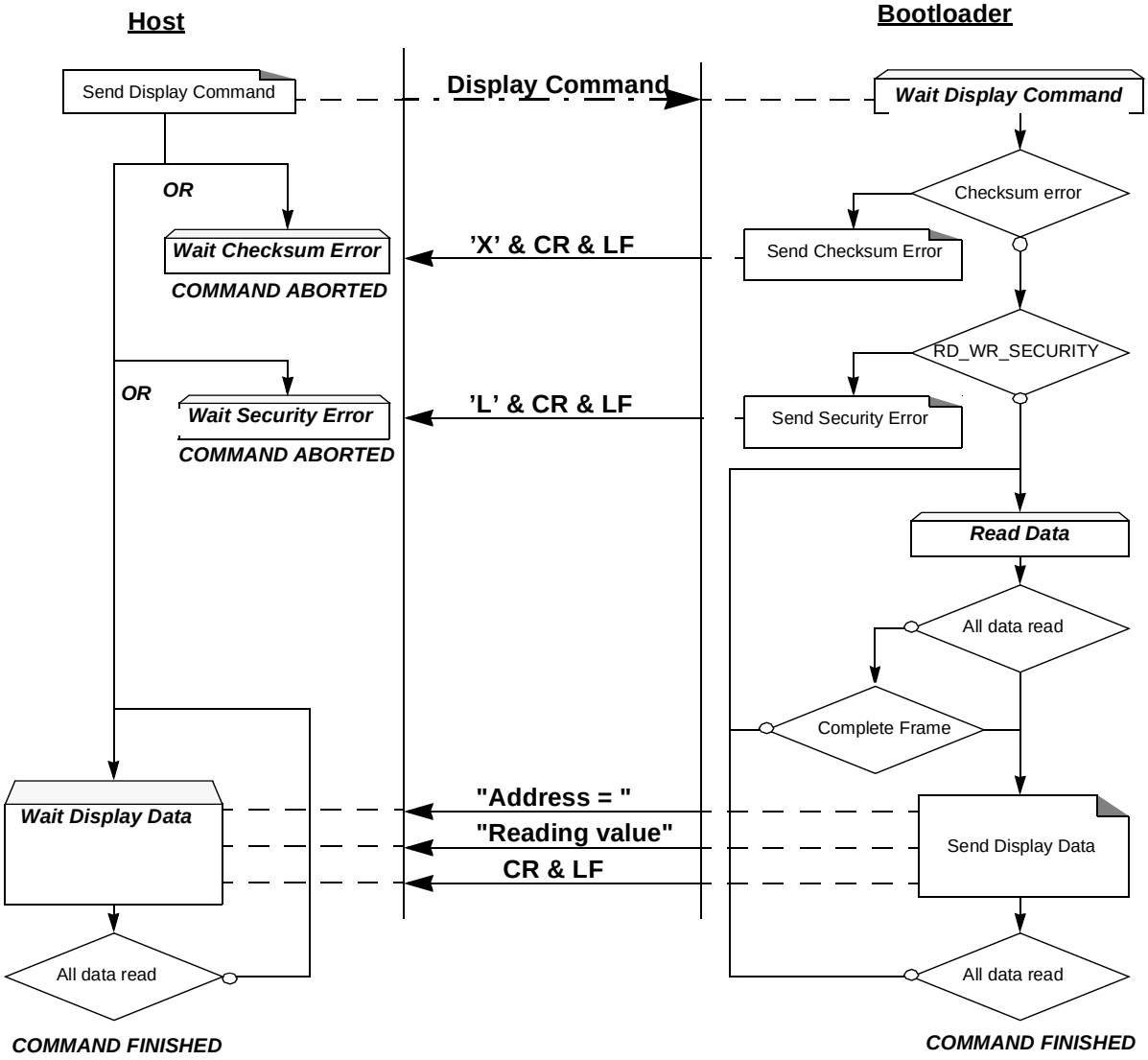

Note: The maximum size of block is 400h. To read more than 400h Bytes, the Host must send a new command.

API Call Description

Several Application Program Interface (API) calls are available for use by an application program to permit selective erasing and programming of Flash pages. All calls are made through a common interface, PGM_MTP. The programming functions are selected by setting up the microcontroller's registers before making a call to PGM_MTP at FFF0h. Results are returned in the registers.

When several Bytes have to be programmed, it is highly recommended to use the Atmel API "PROGRAM DATA PAGE" call. Indeed, this API call writes up to 128 Bytes in a single command.

All routines for software access are provided in the C Flash driver available at Atmel's web site.

The API calls description and arguments are shown in Table 74.

Table 74. API Call Summary

Command	R1	A	DPTR0	DPTR1	Returned Value	Command Effect
READ MANUF ID	00h	XXh	0000h	XXh	ACC = Manufacturer Id	Read Manufacturer identifier
READ DEVICE ID1	00h	XXh	0001h	XXh	ACC = Device Id 1	Read Device identifier 1
READ DEVICE ID2	00h	XXh	0002h	XXh	ACC = Device Id 2	Read Device identifier 2
READ DEVICE ID3	00h	XXh	0003h	XXh	ACC = Device Id 3	Read Device identifier 3
ERASE BLOCK	01h	XXh	DPH = 00h	00h	ACC = DPH	Erase block 0
			DPH = 20h			Erase block 1
			DPH = 40h			Erase block 2
PROGRAM DATA BYTE	02h	Vaue to write	Address of byte to program	XXh	ACC = 0: DONE	Program up one data byte in the on-chip flash memory.
PROGRAM SSB	05h	XXh	DPH = 00h DPL = 00h	00h	ACC = SSB value	Set SSB level 1
			DPH = 00h DPL = 01h			Set SSB level 2
			DPH = 00h DPL = 10h			Set SSB level 0
			DPH = 00h DPL = 11h			Set SSB level 1
PROGRAM BSB	06h	New BSB value	0000h	XXh	none	Program boot status byte
PROGRAM SBV	06h	New SBV value	0001h	XXh	none	Program software boot vector
READ SSB	07h	XXh	0000h	XXh	ACC = SSB	Read Software Security Byte
READ BSB	07h	XXh	0001h	XXh	ACC = BSB	Read Boot Status Byte
READ SBV	07h	XXh	0002h	XXh	ACC = SBV	Read Software Boot Vector
PROGRAM DATA PAGE	09h	Number of byte to program	Address of the first byte to program in the Flash memory	Address in XRAM of the first data to program	ACC = 0: DONE	Program up to 128 bytes in user Flash. Remark: number of bytes to program is limited such as the Flash write remains in a single 128 bytes page. Hence, when ACC is 128, valid values of DPL are 00h, or, 80h.

Table 76. AC Parameters for a Fix Clock

Symbol	-M		-L		Units
	Min	Max	Min	Max	
T	25		25		ns
T_{LHLL}	35		35		ns
T_{AVLL}	5		5		ns
T_{LLAX}	5		5		ns
T_{LLIV}		n 65		65	ns
T_{LLPL}	5		5		ns
T_{PLPH}	50		50		ns
T_{PLIV}		30		30	ns
T_{PXIX}	0		0		ns
T_{PXIZ}		10		10	ns
T_{AVIV}		80		80	ns
T_{PLAZ}		10		10	ns

Table 77. AC Parameters for a Variable Clock

Symbol	Type	Standard Clock	X2 Clock	X Parameter for -M Range	X Parameter for -L Range	Units
T_{LHLL}	Min	2 T - x	T - x	15	15	ns
T_{AVLL}	Min	T - x	0.5 T - x	20	20	ns
T_{LLAX}	Min	T - x	0.5 T - x	20	20	ns
T_{LLIV}	Max	4 T - x	2 T - x	35	35	ns
T_{LLPL}	Min	T - x	0.5 T - x	15	15	ns
T_{PLPH}	Min	3 T - x	1.5 T - x	25	25	ns
T_{PLIV}	Max	3 T - x	1.5 T - x	45	45	ns
T_{PXIX}	Min	x	x	0	0	ns
T_{PXIZ}	Max	T - x	0.5 T - x	15	15	ns
T_{AVIV}	Max	5 T - x	2.5 T - x	45	45	ns
T_{PLAZ}	Max	x	x	10	10	ns

Symbol	Type	Standard Clock	X2 Clock	X Parameter for -M Range	X Parameter for -L Range	Units
T_{RLRH}	Min	6 T - x	3 T - x	25	25	ns
T_{WLWH}	Min	6 T - x	3 T - x	25	25	ns
T_{RLDV}	Max	5 T - x	2.5 T - x	30	30	ns
T_{RHDX}	Min	x	x	0	0	ns
T_{RHDZ}	Max	2 T - x	T - x	25	25	ns
T_{LLDV}	Max	8 T - x	4T -x	45	45	ns
T_{AVDV}	Max	9 T - x	4.5 T - x	65	65	ns
T_{LLWL}	Min	3 T - x	1.5 T - x	30	30	ns
T_{LLWL}	Max	3 T + x	1.5 T + x	30	30	ns
T_{AVWL}	Min	4 T - x	2 T - x	30	30	ns
T_{QVWX}	Min	T - x	0.5 T - x	20	20	ns
T_{QVWH}	Min	7 T - x	3.5 T - x	20	20	ns
T_{WHQX}	Min	T - x	0.5 T - x	15	15	ns
T_{RLAZ}	Max	x	x	0	0	ns
T_{WHLH}	Min	T - x	0.5 T - x	20	20	ns
T_{WHLH}	Max	T + x	0.5 T + x	20	20	ns

External Data Memory Write Cycle

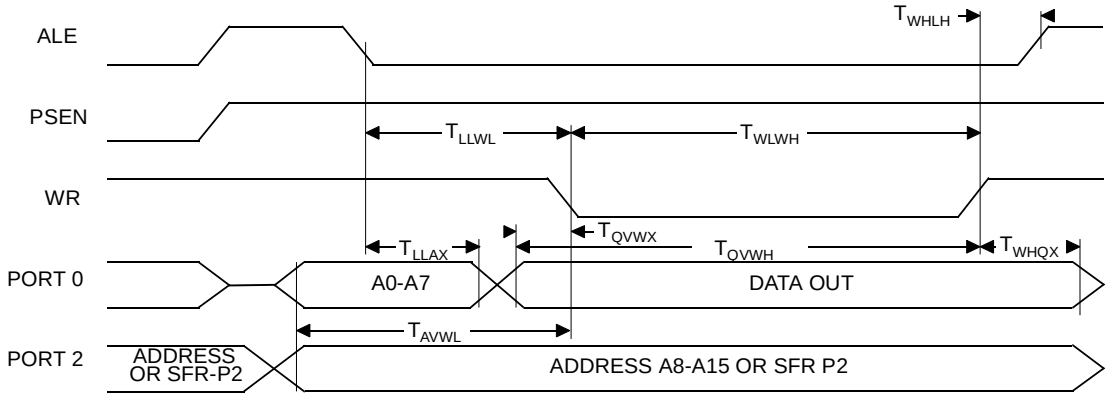
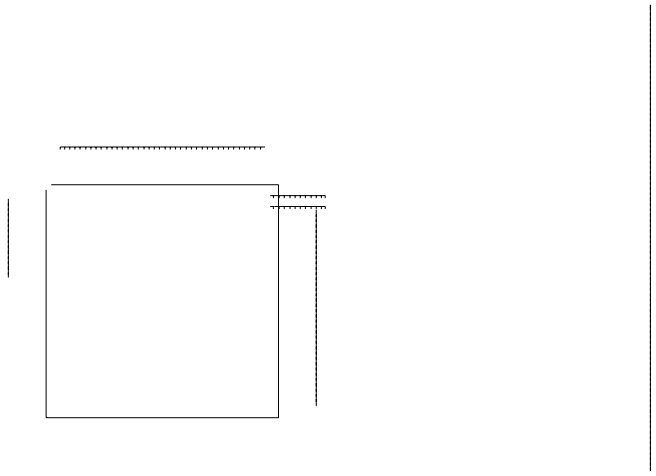
VQFP44