Welcome to E-XFL.COM

What is "Embedded - Microcontrollers"?

"Embedded - Microcontrollers" refer to small, integrated circuits designed to perform specific tasks within larger systems. These microcontrollers are essentially compact computers on a single chip, containing a processor core, memory, and programmable input/output peripherals. They are called "embedded" because they are embedded within electronic devices to control various functions, rather than serving as standalone computers. Microcontrollers are crucial in modern electronics, providing the intelligence and control needed for a wide range of applications.

Applications of "Embedded - Microcontrollers"

Details	
Product Status	Obsolete
Core Processor	80C51
Core Size	8-Bit
Speed	40/20MHz
Connectivity	UART/USART
Peripherals	POR, PWM, WDT
Number of I/O	48
Program Memory Size	64KB (64K x 8)
Program Memory Type	OTP
EEPROM Size	-
RAM Size	1K x 8
Voltage - Supply (Vcc/Vdd)	4.5V ~ 5.5V
Data Converters	-
Oscillator Type	Internal
Operating Temperature	0°C ~ 70°C (TA)
Mounting Type	Surface Mount
Package / Case	68-LCC (J-Lead)
Supplier Device Package	68-PLCC (24.23x24.23)
Purchase URL	https://www.e-xfl.com/product-detail/microchip-technology/ts87c51rd2-mcl

PDIL40 PLCC44 VQFP44 1.4	ROM (bytes)	EPROM (bytes)	XRAM (bytes)	TOTAL RAM (bytes)	I/O
TS80C51RA2 **TS80C51RD2**	0 0	0 0	256 768	512 1024	32 32
TS83C51RB2 **TS83C51RC2** **TS83C51RD2**	16k 32k 64k	0 0 0	256 256 768	512 512 1024	32 32 32
TS87C51RB2 **TS87C51RC2** **TS87C51RD2**	0 0 0	16k 32k 64k	256 256 768	512 512 1024	32 32 32

PLCC68 VQFP64 1.4	ROM (bytes)	EPROM (bytes)	XRAM (bytes)	TOTAL RAM (bytes)	I/O
TS80C51RD2	0	0	768	1024	48
TS83C51RD2	64k	0	768	1024	48
TS87C51RD2	0	64k	768	1024	48

3. Block Diagram

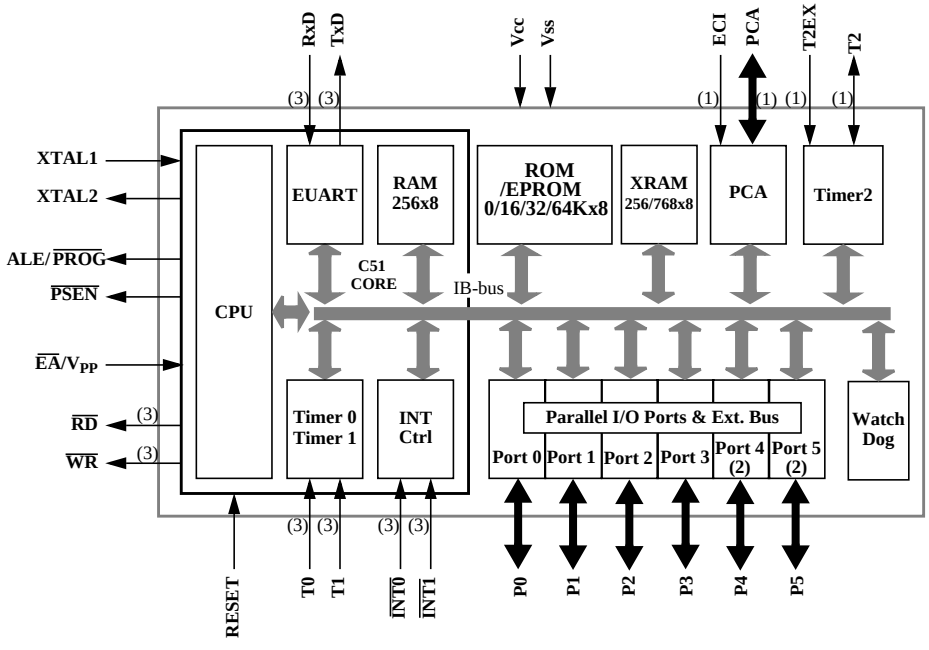

(1): Alternate function of Port 1

(2): Only available on high pin count packages

(3): Alternate function of Port 3

Mnemonic	Pin Number			Type	Name And Function
	DIL	LCC	VQFP 1.4		
V_{SS}	20	22	16	I	**Ground:** 0V reference
Vss1		1	39	I	**Optional Ground:** Contact the Sales Office for ground connection.
V_{CC}	40	44	38	I	**Power Supply:** This is the power supply voltage for normal, idle and power-down operation
P0.0-P0.7	39-32	43-36	37-30	I/O	**Port 0**: Port 0 is an open-drain, bidirectional I/O port. Port 0 pins that have 1s written to them float and can be used as high impedance inputs. Port 0 pins must be polarized to Vcc or Vss in order to prevent any parasitic current consumption. Port 0 is also the multiplexed low-order address and data bus during access to external program and data memory. In this application, it uses strong internal pull-up when emitting 1s. Port 0 also inputs the code bytes during EPROM programming. External pull-ups are required during program verification during which P0 outputs the code bytes.
P1.0-P1.7	1-8	2-9	40-44 1-3	I/O	**Port 1:** Port 1 is an 8-bit bidirectional I/O port with internal pull-ups. Port 1 pins that have 1s written to them are pulled high by the internal pull-ups and can be used as inputs. As inputs, Port 1 pins that are externally pulled low will source current because of the internal pull-ups. Port 1 also receives the low-order address byte during memory programming and verification. Alternate functions for Port 1 include:
	1	2	40	I/O	**T2 (P1.0):** Timer/Counter 2 external count input/Clockout
	2	3	41	I	**T2EX (P1.1):** Timer/Counter 2 Reload/Capture/Direction Control
	3	4	42	I	**ECI (P1.2):** External Clock for the PCA
	4	5	43	I/O	**CEX0 (P1.3):** Capture/Compare External I/O for PCA module 0
	5	6	44	I/O	**CEX1 (P1.4):** Capture/Compare External I/O for PCA module 1
	6	7	45	I/O	**CEX0 (P1.5):** Capture/Compare External I/O for PCA module 2
	7	8	46	I/O	**CEX0 (P1.6):** Capture/Compare External I/O for PCA module 3
	8	9	47	I/O	**CEX0 (P1.7):** Capture/Compare External I/O for PCA module 4
P2.0-P2.7	21-28	24-31	18-25	I/O	**Port 2**: Port 2 is an 8-bit bidirectional I/O port with internal pull-ups. Port 2 pins that have 1s written to them are pulled high by the internal pull-ups and can be used as inputs. As inputs, Port 2 pins that are externally pulled low will source current because of the internal pull-ups. Port 2 emits the high-order address byte during fetches from external program memory and during accesses to external data memory that use 16-bit addresses (MOVX @DPTR).In this application, it uses strong internal pull-ups emitting 1s. During accesses to external data memory that use 8-bit addresses (MOVX @Ri), port 2 emits the contents of the P2 SFR. Some Port 2 pins (P2.0 to P2.5) receive the high order address bits during EPROM programming and verification:
P3.0-P3.7	10-17	11, 13-19	5, 7-13	I/O	**Port 3:** Port 3 is an 8-bit bidirectional I/O port with internal pull-ups. Port 3 pins that have 1s written to them are pulled high by the internal pull-ups and can be used as inputs. As inputs, Port 3 pins that are externally pulled low will source current because of the internal pull-ups. Some Port 3 pins (P3.4 to P3.5) receive the high order address bits during EPROM programming and verification. Port 3 also serves the special features of the 80C51 family, as listed below.
	10	11	5	I	**RXD (P3.0):** Serial input port
	11	13	7	O	**TXD (P3.1):** Serial output port
	12	14	8	I	**$\overline{\text{INT0}}$ (P3.2):** External interrupt 0
	13	15	9	I	**$\overline{\text{INT1}}$ (P3.3):** External interrupt 1
	14	16	10	I	**T0 (P3.4):** Timer 0 external input
	15	17	11	I	**T1 (P3.5):** Timer 1 external input
	16	18	12	O	**$\overline{\text{WR}}$ (P3.6):** External data memory write strobe
	17	19	13	O	**$\overline{\text{RD}}$ (P3.7):** External data memory read strobe

Mnemonic	Pin Number			Type	Name And Function
ALE/$\overline{PROG}$	30	33	27	O (I)	**Address Latch Enable/Program Pulse:** Output pulse for latching the low byte of the address during an access to external memory. In normal operation, ALE is emitted at a constant rate of 1/6 (1/3 in X2 mode) the oscillator frequency, and can be used for external timing or clocking. Note that one ALE pulse is skipped during each access to external data memory. This pin is also the program pulse input ($\overline{PROG}$) during EPROM programming. ALE can be disabled by setting SFR's AUXR.0 bit. With this bit set, ALE will be inactive during internal fetches.
$\overline{PSEN}$	29	32	26	O	**Program Store ENable:** The read strobe to external program memory. When executing code from the external program memory, $\overline{PSEN}$ is activated twice each machine cycle, except that two $\overline{PSEN}$ activations are skipped during each access to external data memory. $\overline{PSEN}$ is not activated during fetches from internal program memory.
$\overline{EA}$/V_{PP}	31	35	29	I	**External Access Enable/Programming Supply Voltage:** $\overline{EA}$ must be externally held low to enable the device to fetch code from external program memory locations 0000H and 3FFFH (RB) or 7FFFH (RC), or FFFFH (RD). If EA is held high, the device executes from internal program memory unless the program counter contains an address greater than 3FFFH (RB) or 7FFFH (RC) $\overline{EA}$ must be held low for ROMless devices. This pin also receives the 12.75V programming supply voltage (V_{PP}) during EPROM programming. If security level 1 is programmed, $\overline{EA}$ will be internally latched on Reset.
XTAL1	19	21	15	I	**Crystal 1:** Input to the inverting oscillator amplifier and input to the internal clock generator circuits.
XTAL2	18	20	14	O	**Crystal 2:** Output from the inverting oscillator amplifier

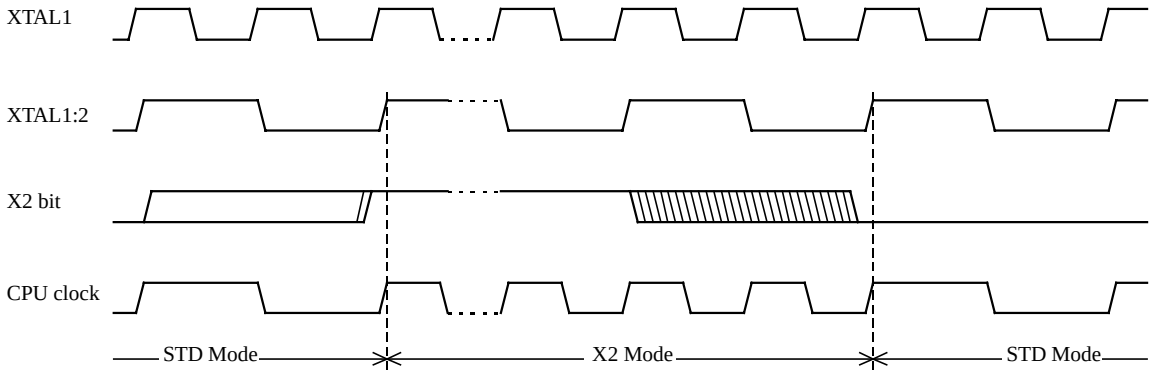

Figure 2. Mode Switching Waveforms

The X2 bit in the CKCON register (See Table 3.) allows to switch from 12 clock cycles per instruction to 6 clock cycles and vice versa. At reset, the standard speed is activated (STD mode). Setting this bit activates the X2 feature (X2 mode).

CAUTION

In order to prevent any incorrect operation while operating in X2 mode, user must be aware that all peripherals using clock frequency as time reference (UART, timers, PCA...) will have their time reference divided by two. For example a free running timer generating an interrupt every 20 ms will then generate an interrupt every 10 ms. UART with 4800 baud rate will have 9600 baud rate.

6.2. Dual Data Pointer Register Ddptr

The additional data pointer can be used to speed up code execution and reduce code size in a number of ways.

The dual DPTR structure is a way by which the chip will specify the address of an external data memory location. There are two 16-bit DPTR registers that address the external memory, and a single bit called DPS = AUXR1/bit0 (See Table 4.) that allows the program code to switch between them (Refer to Figure 3).

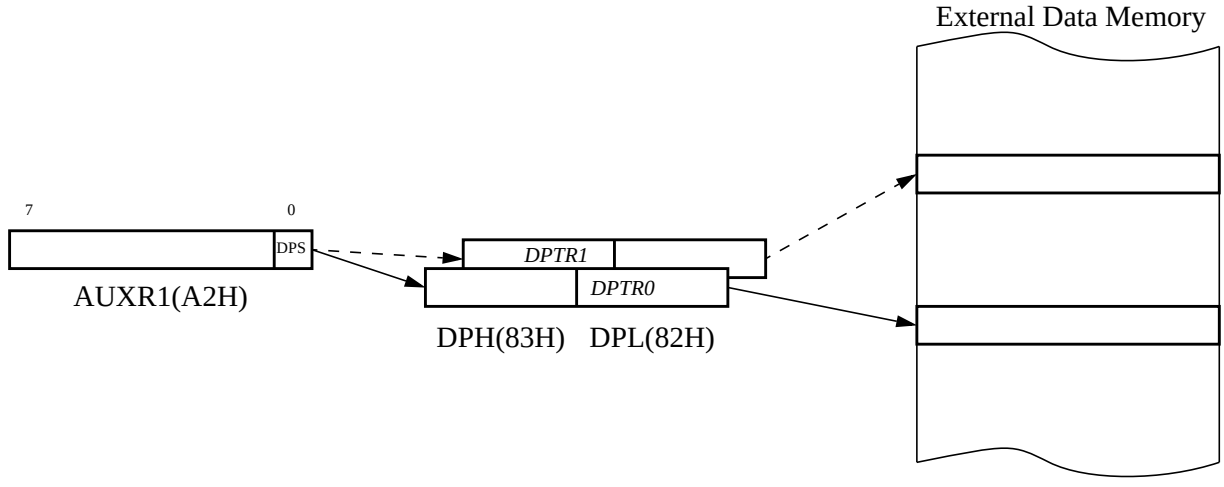

Figure 3. Use of Dual Pointer

Table 4. AUXR1: Auxiliary Register 1

AUXR1 Address 0A2H		-	-	-	-	GF3	-	-	DPS
	Reset value	X	X	X	X	0	X	X	0

Symbol	Function	
-	Not implemented, reserved for future use.[a]	
DPS	Data Pointer Selection.	
	DPS	**Operating Mode**
	0	DPTR0 Selected
	1	DPTR1 Selected
GF3	This bit is a general purpose user flag[b].	

a. User software should not write 1s to reserved bits. These bits may be used in future 8051 family products to invoke new feature. In that case, the reset value of the new bit will be 0, and its active value will be 1. The value read from a reserved bit is indeterminate.
b. GF3 will not be available on first version of the RC devices.

Application

Software can take advantage of the additional data pointers to both increase speed and reduce code size, for example, block operations (copy, compare, search ...) are well served by using one data pointer as a ’source’ pointer and the other one as a "destination" pointer.

ASSEMBLY LANGUAGE

```
; Block move using dual data pointers
; Destroys DPTR0, DPTR1, A and PSW
; note: DPS exits opposite of entry state
; unless an extra INC AUXR1 is added
;
00A2              AUXR1 EQU 0A2H
;
0000  909000      MOV  DPTR,#SOURCE      ; address of SOURCE
0003  05A2        INC  AUXR1             ; switch data pointers
0005  90A000      MOV  DPTR,#DEST        ; address of DEST
0008              LOOP:
0008  05A2        INC  AUXR1             ; switch data pointers
000A  E0          MOVX A,@DPTR           ; get a byte from SOURCE
000B  A3          INC  DPTR              ; increment SOURCE address
000C  05A2        INC  AUXR1             ; switch data pointers
000E  F0          MOVX @DPTR,A           ; write the byte to DEST
000F  A3          INC  DPTR              ; increment DEST address
0010  70F6        JNZ  LOOP              ; check for 0 terminator
0012  05A2        INC  AUXR1             ; (optional) restore DPS
```

INC is a short (2 bytes) and fast (12 clocks) way to manipulate the DPS bit in the AUXR1 SFR. However, note that the INC instruction does not directly force the DPS bit to a particular state, but simply toggles it. In simple routines, such as the block move example, only the fact that DPS is toggled in the proper sequence matters, not its actual value. In other words, the block move routine works the same whether DPS is '0' or '1' on entry. Observe that without the last instruction (INC AUXR1), the routine will exit with DPS in the opposite state.

6.3. Expanded RAM (XRAM)

The TS80C51Rx2 provide additional Bytes of ramdom access memory (RAM) space for increased data parameter handling and high level language usage.

RA2, RB2 and RC2 devices have 256 bytes of expanded RAM, from 00H to FFH in external data space; RD2 devices have 768 bytes of expanded RAM, from 00H to 2FFH in external data space.

The TS80C51Rx2 has internal data memory that is mapped into four separate segments.

The four segments are:

- 1. The Lower 128 bytes of RAM (addresses 00H to 7FH) are directly and indirectly addressable.
- 2. The Upper 128 bytes of RAM (addresses 80H to FFH) are indirectly addressable only.
- 3. The Special Function Registers, SFRs, (addresses 80H to FFH) are directly addressable only.
- 4. The expanded RAM bytes are indirectly accessed by MOVX instructions, and with the EXTRAM bit cleared in the AUXR register. (See Table 5.)

The Lower 128 bytes can be accessed by either direct or indirect addressing. The Upper 128 bytes can be accessed by indirect addressing only. The Upper 128 bytes occupy the same address space as the SFR. That means they have the same address, but are physically separate from SFR space.

When an instruction accesses an internal location above address 7FH, the CPU knows whether the access is to the upper 128 bytes of data RAM or to SFR space by the addressing mode used in the instruction.

- Instructions that use direct addressing access SFR space. **For example: MOV 0A0H, # data** ,accesses the SFR at location 0A0H (which is P2).
- Instructions that use indirect addressing access the Upper 128 bytes of data RAM. **For example: MOV @R0, # data** where R0 contains 0A0H, accesses the data byte at address 0A0H, rather than P2 (whose address is 0A0H).
- The 256 or 768 XRAM bytes can be accessed by indirect addressing, with EXTRAM bit cleared and MOVX instructions. This part of memory which is physically located on-chip, logically occupies the first 256 or 768 bytes of external data memory.
- With EXTRAM = 0, the XRAM is indirectly addressed, using the MOVX instruction in combination with any of the registers R0, R1 of the selected bank or DPTR. **An access to XRAM will not affect ports P0, P2, P3.6 ($\overline{WR}$) and P3.7 ($\overline{RD}$)**. **For example, with EXTRAM = 0, MOVX @R0, # data** where R0 contains 0A0H, accesses the XRAM at address 0A0H rather than external memory. An access to external data memory locations higher than FFH (i.e. 0100H to FFFFH) (higher than 2FFH (i.e. 0300H to FFFFH for RD devices) will be performed with the MOVX DPTR instructions in the same way as in the standard 80C51, so with P0 and P2 as data/address busses, and P3.6 and P3.7 as write and read timing signals. Refer to Figure . For RD devices, accesses to expanded RAM from 100H to 2FFH can only be done thanks to the use of DPTR.
- With EXTRAM = 1, MOVX @Ri and MOVX @DPTR will be similar to the standard 80C51. MOVX @ Ri will provide an eight-bit address multiplexed with data on Port0 and any output port pins can be used to output higher order address bits. This is to provide the external paging capability. MOVX @DPTR will generate a sixteen-bit address. Port2 outputs the high-order eight address bits (the contents of DPH) while Port0 multiplexes the low-order eight address bits (DPL) with data. MOVX @ Ri and MOVX @DPTR will generate either read or write signals on P3.6 ($\overline{WR}$) and P3.7 ($\overline{RD}$).

The stack pointer (SP) may be located anywhere in the 256 bytes RAM (lower and upper RAM) internal data memory. The stack may not be located in the XRAM.

- The ECF bit which when set causes an interrupt and the PCA overflow flag CF (in the CCON SFR) to be set when the PCA timer overflows.

The CCON SFR contains the run control bit for the PCA and the flags for the PCA timer (CF) and each module (Refer to Table 9).

- Bit CR (CCON.6) must be set by software to run the PCA. The PCA is shut off by clearing this bit.
- Bit CF: The CF bit (CCON.7) is set when the PCA counter overflows and an interrupt will be generated if the ECF bit in the CMOD register is set. The CF bit can only be cleared by software.
- Bits 0 through 4 are the flags for the modules (bit 0 for module 0, bit 1 for module 1, etc.) and are set by hardware when either a match or a capture occurs. These flags also can only be cleared by software.

Table 9. CCON: PCA Counter Control Register

CCON Address 0D8H	CF	CR	-	CCF4	CCF3	CCF2	CCF1	CCF0
Reset value	0	0	X	0	0	0	0	0

Symbol	Function
CF	PCA Counter Overflow flag. Set by hardware when the counter rolls over. CF flags an interrupt if bit ECF in CMOD is set. CF may be set by either hardware or software but can only be cleared by software.
CR	PCA Counter Run control bit. Set by software to turn the PCA counter on. Must be cleared by software to turn the PCA counter off.
-	Not implemented, reserved for future use.[a]
CCF4	PCA Module 4 interrupt flag. Set by hardware when a match or capture occurs. Must be cleared by software.
CCF3	PCA Module 3 interrupt flag. Set by hardware when a match or capture occurs. Must be cleared by software.
CCF2	PCA Module 2 interrupt flag. Set by hardware when a match or capture occurs. Must be cleared by software.
CCF1	PCA Module 1 interrupt flag. Set by hardware when a match or capture occurs. Must be cleared by software.
CCF0	PCA Module 0 interrupt flag. Set by hardware when a match or capture occurs. Must be cleared by software.

a. User software should not write 1s to reserved bits. These bits may be used in future 8051 family products to invoke new features. In that case, the reset or inactive value of the new bit will be 0, and its active value will be 1. The value read from a reserved bit is indeterminate.

The watchdog timer function is implemented in module 4 (See Figure 10).

The PCA interrupt system is shown in Figure 8

Table 10. CCAPMn: PCA Modules Compare/Capture Control Registers

CCAPMn Address n = 0 - 4	CCAPM0=0DAH CCAPM1=0DBH CCAPM2=0DCH CCAPM3=0DDH CCAPM4=0DEH							
	-	ECOMn	CAPPn	CAPNn	MATn	TOGn	PWMm	ECCFn
Reset value	X	0	0	0	0	0	0	0

Symbol	Function
-	Not implemented, reserved for future use.[a]
ECOMn	Enable Comparator. ECOMn = 1 enables the comparator function.
CAPPn	Capture Positive, CAPPn = 1 enables positive edge capture.
CAPNn	Capture Negative, CAPNn = 1 enables negative edge capture.
MATn	Match. When MATn = 1, a match of the PCA counter with this module's compare/capture register causes the CCFn bit in CCON to be set, flagging an interrupt.
TOGn	Toggle. When TOGn = 1, a match of the PCA counter with this module's compare/capture register causes the CEXn pin to toggle.
PWMn	Pulse Width Modulation Mode. PWMn = 1 enables the CEXn pin to be used as a pulse width modulated output.
ECCFn	Enable CCF interrupt. Enables compare/capture flag CCFn in the CCON register to generate an interrupt.

a. User software should not write 1s to reserved bits. These bits may be used in future 8051 family products to invoke new features. In that case, the reset or inactive value of the new bit will be 0, and its active value will be 1. The value read from a reserved bit is indeterminate.

Table 11. PCA Module Modes (CCAPMn Registers)

ECOMn	CAPPn	CAPNn	MATn	TOGn	PWMm	ECCFn	Module Function
0	0	0	0	0	0	0	No Operation
X	1	0	0	0	0	X	16-bit capture by a positive-edge trigger on CEXn
X	0	1	0	0	0	X	16-bit capture by a negative trigger on CEXn
X	1	1	0	0	0	X	16-bit capture by a transition on CEXn
1	0	0	1	0	0	X	16-bit Software Timer / Compare mode.
1	0	0	1	1	0	X	16-bit High Speed Output
1	0	0	0	0	1	0	8-bit PWM
1	0	0	1	X	0	X	Watchdog Timer (module 4 only)

There are two additional registers associated with each of the PCA modules. They are CCAPnH and CCAPnL and these are the registers that store the 16-bit count when a capture occurs or a compare should occur. When a module is used in the PWM mode these registers are used to control the duty cycle of the output (See Table 12 & Table 13)

6.5.1. PCA Capture Mode

To use one of the PCA modules in the capture mode either one or both of the CCAPM bits CAPN and CAPP for that module must be set. The external CEX input for the module (on port 1) is sampled for a transition. When a valid transition occurs the PCA hardware loads the value of the PCA counter registers (CH and CL) into the module's capture registers (CCAPnL and CCAPnH). If the CCFn bit for the module in the CCON SFR and the ECCFn bit in the CCAPMn SFR are set then an interrupt will be generated (Refer to Figure 9).

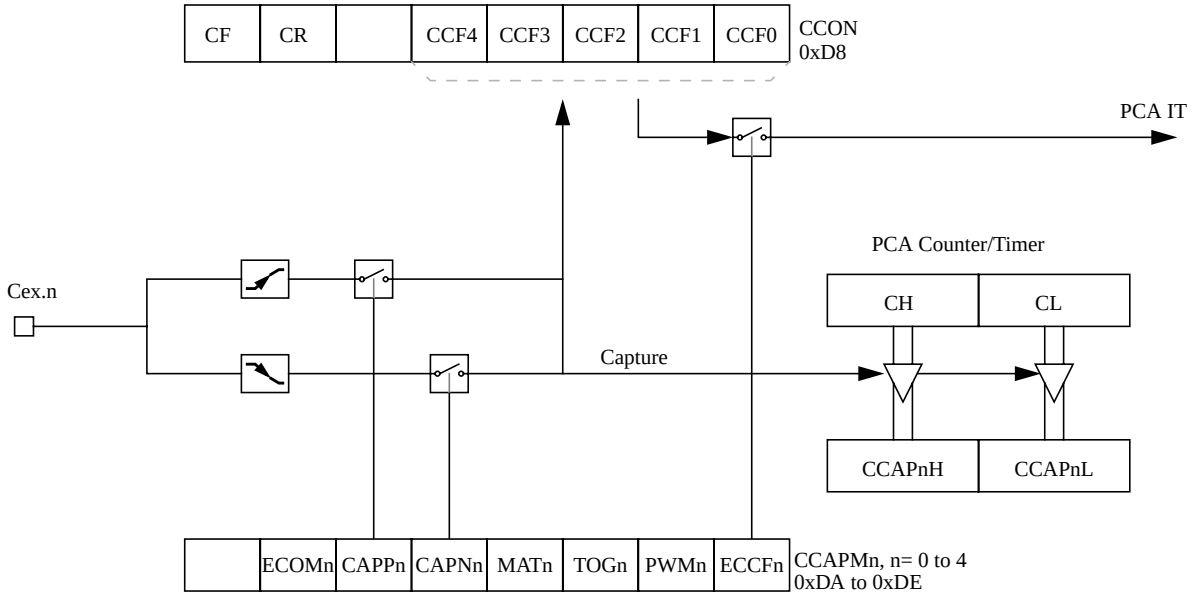

Figure 9. PCA Capture Mode

6.5.2. 16-bit Software Timer / Compare Mode

The PCA modules can be used as software timers by setting both the ECOM and MAT bits in the modules CCAPMn register. The PCA timer will be compared to the module's capture registers and when a match occurs an interrupt will occur if the CCFn (CCON SFR) and the ECCFn (CCAPMn SFR) bits for the module are both set (See Figure 10).

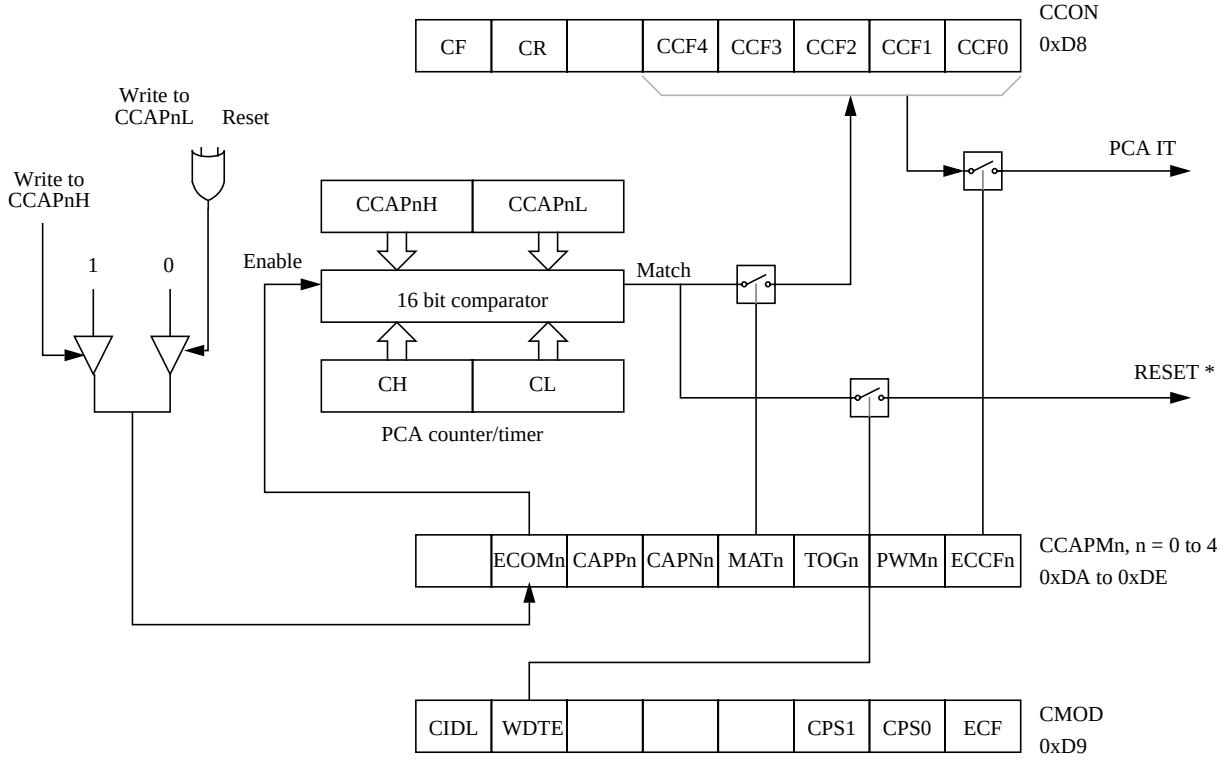

* Only for Module 4

Figure 10. PCA Compare Mode and PCA Watchdog Timer

Before enabling ECOM bit, CCAPnL and CCAPnH should be set with a non zero value, otherwise an unwanted match could happen. Writing to CCAPnH will set the ECOM bit.

Once ECOM set, writing CCAPnL will clear ECOM so that an unwanted match doesn’t occur while modifying the compare value. Writing to CCAPnH will set ECOM. For this reason, user software should write CCAPnL first, and then CCAPnH. Of course, the ECOM bit can still be controlled by accessing to CCAPMn register.

Table 20. IP Register

IP - Interrupt Priority Register (B8h)

7	6	5	4	3	2	1	0
-	PPC	PT2	PS	PT1	PX1	PT0	PX0

Bit Number	Bit Mnemonic	Description
7	-	**Reserved** The value read from this bit is indeterminate. Do not set this bit.
6	PPC	**PCA interrupt priority bit** Refer to PPCH for priority level.
5	PT2	**Timer 2 overflow interrupt Priority bit** Refer to PT2H for priority level.
4	PS	**Serial port Priority bit** Refer to PSH for priority level.
3	PT1	**Timer 1 overflow interrupt Priority bit** Refer to PT1H for priority level.
2	PX1	**External interrupt 1 Priority bit** Refer to PX1H for priority level.
1	PT0	**Timer 0 overflow interrupt Priority bit** Refer to PT0H for priority level.
0	PX0	**External interrupt 0 Priority bit** Refer to PX0H for priority level.

Reset Value = X000 0000b
Bit addressable