Renesas Electronics America Inc - R7FS5D57A2A01CLK#AC0 Datasheet

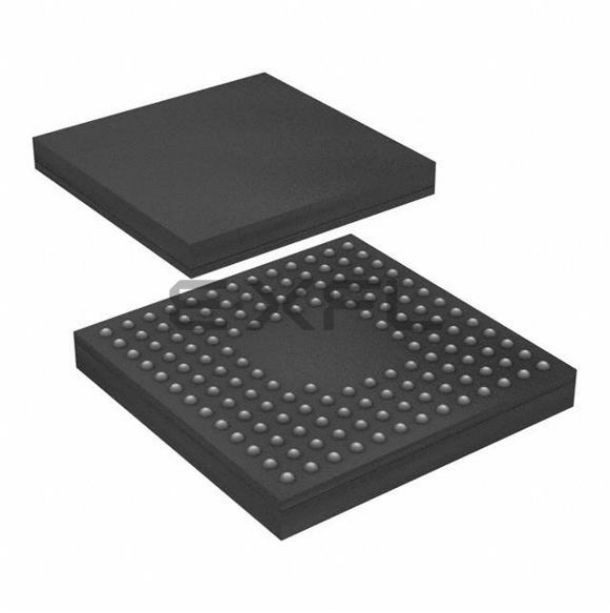

Welcome to E-XFL.COM

What is "Embedded - Microcontrollers"?

"Embedded - Microcontrollers" refer to small, integrated circuits designed to perform specific tasks within larger systems. These microcontrollers are essentially compact computers on a single chip, containing a processor core, memory, and programmable input/output peripherals. They are called "embedded" because they are embedded within electronic devices to control various functions, rather than serving as standalone computers. Microcontrollers are crucial in modern electronics, providing the intelligence and control needed for a wide range of applications.

Applications of "Embedded - Microcontrollers"

Details	
Product Status	Obsolete
Core Processor	ARM® Cortex®-M4
Core Size	32-Bit Single-Core
Speed	120MHz
Connectivity	CANbus, EBI/EMI, Ethernet, I²C, IrDA, MMC/SD, QSPI, SCI, SPI, SSI, UART/USART, USB
Peripherals	DMA, LVD, POR, PWM, WDT
Number of I/O	110
Program Memory Size	512KB (512K x 8)
Program Memory Type	FLASH
EEPROM Size	32K x 8
RAM Size	384K x 8
Voltage - Supply (Vcc/Vdd)	2.7V ~ 3.6V
Data Converters	A/D 22x12b; D/A 2x12b
Oscillator Type	Internal
Operating Temperature	-40°C ~ 85°C (TA)
Mounting Type	Surface Mount
Package / Case	145-TFLGA
Supplier Device Package	145-TFLGA (7x7)
Purchase URL	https://www.e-xfl.com/product-detail/renesas-electronics-america/r7fs5d57a2a01clk-ac0

Pin number						Extbus		Timers				Communication interfaces									Analog		HMI	
LGA145	LQFP144	LQFP100	Power, System, Clock, Debug, CAC	Interrupt	I/O port	External bus	SDRAM	AGT	GPT	GPT	RTC	USBFS, CAN	SCI0,2,4,6,8 (30 MHz)	SCI1,3,5,7,9 (30 MHz)	IIC	SPI, QSPI	SSIE	ETHERC (MII) (25 MHz)	ETHERC (RMII) (50 MHz)	SDHI	ADC12	DAC12, ACMPHS	CTSU	PDC
C11	41	30	-	-	P207	A17	-	-	-	-	-	-	-	-	-	SSLB2_A/QSSL	-	-	-	-	-	-	TS02	-
B10	42	31	-	IRQ0-DS	P206	WAIT	-	-	GTIU	-	-	USB_VBUSEN	RXD4/MISO4/SCL4	-	SDA1_A	SSLB1_A	SSIDATA0_C	ET0_LINKSTA	ET0_LINKSTA	SD0DAT2_A	-	-	TS01	-
A10	43	32	CLKOUT	IRQ1-DS	P205	A16	-	AGTO1	GTIV	GTIOC4A	-	USB_OVRCURA-DS	TXD4/MOSI4/SDA4	CTS9_RTS9/SS9	SCL1_A	SSLB0_A	SSILRCK0/SSIFS0_C	ET0_WOL	ET0_WOL	SD0DAT3_A	-	-	TSCAP	-
C10	44	-	CACREF	-	P204	A18	-	AGTIO1	GTIW	GTIOC4B	-	USB_OVRCURB-DS	SCK4	SCK9	SCL0_B	RSPCKB_A	SSIBCK0_C	ET0_RX_DV	-	SD0DAT4_A	-	-	TS00	-
A9	45	-	-	IRQ2-DS	P203	A19	-	-	-	GTIOC5A	-	CTX0	CTS2_RTS2/SS2	TXD9/MOSI9/SDA9	-	MOSIB_A	-	ET0_COL	-	SD0DAT5_A	-	-	TSCAP	-
C9	46	-	-	IRQ3-DS	P202	WR1/BC1	-	-	-	GTIOC5B	-	CRX0	SCK2	RXD9/MISO9/SCL9	-	MISOB_A		ET0_ERXD2	-	SD0DAT6_A	-	-	-	-
B9	47	-	-	-	P313	A20	-	-	-	-	-	-	-	-	-	-	-	ET0_ERXD3	-	SD0DAT7_A	-	-	-	-
D9	48	-	VSS	-	-	-	-	-	-	-	-	-	-	-	-	-	-	-	-	-	-	-	-	-
D8	49	-	VCC	-	-	-	-	-	-	-	-	-	-	-	-	-	-	-	-	-	-	-	-	-
A8	50	33	TRCLK	-	P214	-	-	-	GTIU	-	-	-	-	-	-	QSPCLK	-	ET0_MDC	ET0_MDC	SD0CLK_B	-	-	-	-
B8	51	34	TRDATA0	-	P211	CS7	-	-	GTIV	-	-	-	-	-	-	QIO0	-	ET0_MDIO	ET0_MDIO	SD0CMD_B	-	-	-	-
A7	52	35	TRDATA1	-	P210	CS6	-	-	GTIW	-	-	-	-	-	-	QIO1	-	ET0_WOL	ET0_WOL	SD0CD	-	-	-	-
B7	53	36	TRDATA2	-	P209	CS5	-	-	GTOVUP	-	-	-	-	-	-	QIO2	-	ET0_EXOUT	ET0_EXOUT	SD0WP	-	-	-	-
A6	54	37	TRDATA3	-	P208	CS4	-	-	GTOVLO	-	-	-	-	-	-	QIO3	-	ET0_LINKSTA	ET0_LINKSTA	SD0DAT0_B	-	-	-	-
C7	55	38	RES	-	-	-	-	-	-	-	-	-	-	-	-	-	-	-	-	-	-	-	-	-
B6	56	39	MD	-	P201	-	-	-	-	-	-	-	-	-	-	-	-	-	-	-	-	-	-	-
C8	57	40	-	NMI	P200	-	-	-	-	-	-	-	-	-	-	-	-	-	-	-	-	-	-	-
C6	58	-	-	-	P312	CS3	CAS	AGTOA1	-	-	-	-	-	CTS3_RTS3/SS3	-	-	-	-	-	-	-	-	-	-
B5	59	-	-	-	P311	CS2	RAS	AGTOB1	-	-	-	-	-	SCK3	-	-	-	-	-	-	-	-	-	-
D7	60	-	-	-	P310	A15	A15	AGTEE1	-	-	-	-	-	TXD3	-	QIO3	-	-	-	-	-	-	-	-
A5	61	-	-	-	P309	A14	A14	-	-	-	-	-	-	RXD3	-	QIO2	-	-	-	-	-	-	-	-
C5	62	-	-	-	P308	A13	A13	-	-	-	-	-	-	-	-	QIO1	-	-	-	-	-	-	-	-
A4	63	41	-	-	P307	A12	A12	-	GTOUUP	-	-	-	CTS6	-	-	QIO0	-	-	-	-	-	-	-	-
B4	64	42	-	-	P306	A11	A11	-	GTOULO	-	-	-	SCK6	-	-	QSSL	-	-	-	-	-	-	-	-
D6	65	43	-	IRQ8	P305	A10	A10	-	GTOWUP	-	-	-	TXD6/MOSI6/SDA6	-	-	QSPCLK	-	-	-	-	-	-	-	-
C4	66	44	-	IRQ9	P304	A09	A09	-	GTOWLO	GTIOC7A	-	-	RXD6/MISO6/SCL6	-	-	-	-	-	-	-	-	-	-	-
A3	67	45	VSS	-	-	-	-	-	-	-	-	-	-	-	-	-	-	-	-	-	-	-	-	-
B3	68	46	VCC	-	-	-	-	-	-	-	-	-	-	-	-	-	-	-	-	-	-	-	-	-
D5	69	47	-	-	P303	A08	A08	-	-	GTIOC7B	-	-	-	-	-	-	-	-	-	-	-	-	-	-
A2	70	48	-	IRQ5	P302	A07	A07	-	GTOUUP	GTIOC4A	-	-	TXD2/MOSI2/SDA2	-	-	SSLB3_B	-	-	-	-	-	-	-	-
C3	71	49	-	IRQ6	P301	A06	A06	AGTIO0	GTOULO	GTIOC4B	-	-	RXD2/MISO2/SCL2	CTS9_RTS9/SS9	-	SSLB2_B	-	-	-	-	-	-	-	-
B2	72	50	TCK/SWCLK	-	P300	-	-	-	GTOUUP	GTIOC0A_A	-	-	-	-	-	SSLB1_B	-	-	-	-	-	-	-	-
A1	73	51	TMS/SWDIO	-	P108	-	-	-	GTOULO	GTIOC0B_A	-	-	-	CTS9_RTS9/SS9	-	SSLB0_B	-	-	-	-	-	-	-	-
D4	74	52	CLKOUT/TDO/SWO	-	P109	-	-	-	GTOVUP	GTIOC1A_A	-	CTX1	-	TXD9/MOSI9/SDA9	-	MOSIB_B	-	-	-	-	-	-	-	-
B1	75	53	TDI	IRQ3	P110	-	-	-	GTOVLO	GTIOC1B_A	-	CRX1	CTS2_RTS2/SS2	RXD9/MISO9/SCL9	-	MISOB_B	-	-	-	-	-	VCOUT	-	-
C2	76	54	-	IRQ4	P111	A05	A05	-	-	GTIOC3A_A	-	-	SCK2	SCK9	-	RSPCKB_B	-	-	-	-	-	-	-	-
D3	77	55	-	-	P112	A04	A04	-	-	GTIOC3B_A	-	-	TXD2/MOSI2/SDA2	SCK1	-	SSLB0_B	SSIBCK0_B	-	-	-	-	-	-	-
C1	78	56	-	-	P113	A03	A03	-	-	GTIOC2A	-	-	RXD2/MISO2/SCL2	-	-	-	SSILRCK0/SSIFS0_B	-	-	-	-	-	-	-
E4	79	57	-	-	P114	A02	A02	-	-	GTIOC2B	-	-	-	-	-	-	SSIRXD0_B	-	-	-	-	-	-	-
E3	80	58	-	-	P115	A01	A01	-	-	GTIOC4A	-	-	-	-	-	-	SSITXD0_B	-	-	-	-	-	-	-
D2	81	-	VCC	-	-	-	-	-	-	-	-	-	-	-	-	-	-	-	-	-	-	-	-	-
D1	82	-	VSS	-	-	-	-	-	-	-	-	-	-	-	-	-	-	-	-	-	-	-	-	-
F4	83	59	-	-	P608	A00/BC0	A00/DQM1	-	-	GTIOC4B	-	-	-	-	-	-	-	-	-	-	-	-	-	-
E2	84	60	-	-	P609	CS1	CKE	-	-	GTIOC5A	-	CTX1	-	-	-	-	-	-	-	-	-	-	-	-
F3	85	61	-	-	P610	CS0	WE	-	-	GTIOC5B	-	CRX1	-	-	-	-	-	-	-	-	-	-	-	-

2. Electrical Characteristics

Unless otherwise specified, the electrical characteristics of the MCU are defined under the following conditions:

- VCC = AVCC0 = VCC_USB = VBATT = 2.7 to 3.6 V
- 2.7 ≤ VREFH0/VREFH ≤ AVCC0
- VSS = AVSS0 = VREFL0/VREFL = VSS_USB = 0 V
- $T_a = T_{opr}$.

Figure 2.1 shows the timing conditions.

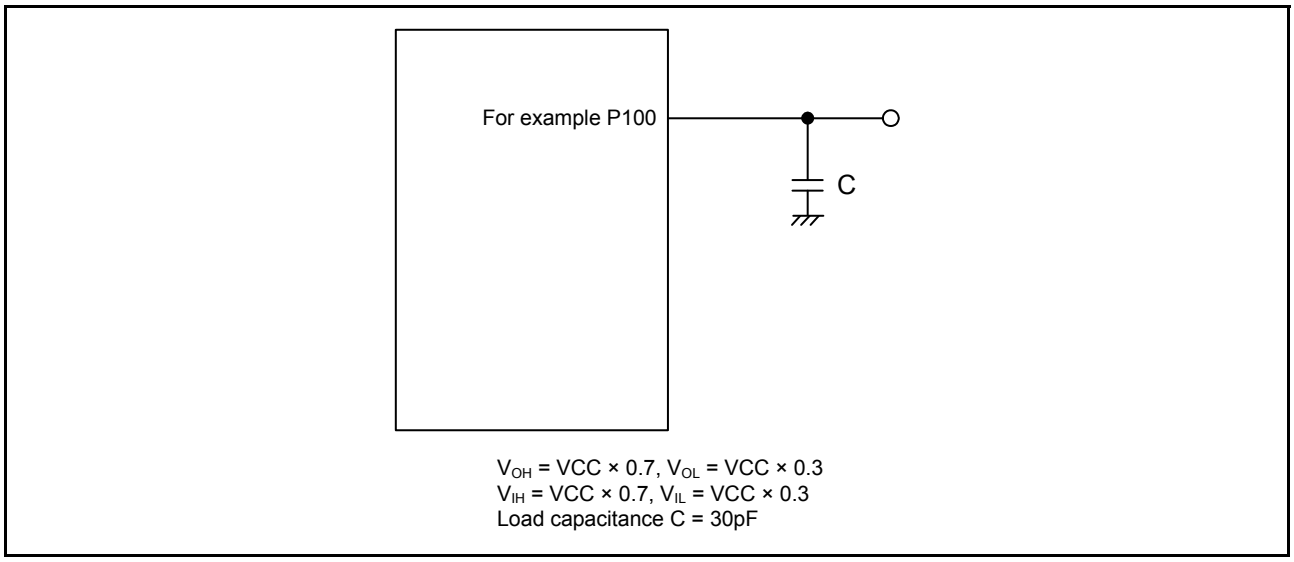

Figure 2.1 Input or output timing measurement conditions

The recommended measurement conditions for the timing specification of each peripheral provided are for the best peripheral operation. Make sure to adjust the driving abilities of each pin to meet your conditions.

2.1 Absolute Maximum Ratings

Table 2.1 Absolute maximum ratings

Item	Symbol	Value	Unit
Power supply voltage	VCC, VCC_USB *2	–0.3 to +4.0	V
VBATT power supply voltage	VBATT	–0.3 to +4.0	V
Input voltage (except for 5 V-tolerant ports*1)	V_{in}	–0.3 to VCC + 0.3	V
Input voltage (5 V-tolerant ports*1)	V_{in}	–0.3 to + VCC + 4.0 (max. 5.8)	V
Reference power supply voltage	VREFH/VREFH0	–0.3 to VCC + 0.3	V
Analog power supply voltage	AVCC0 *2	–0.3 to +4.0	V
Analog input voltage	V_{AN}	–0.3 to AVCC0 + 0.3	V
Operating temperature*3, *4, *5	T_{opr}	–40 to +85 –40 to +105	°C
Storage temperature	T_{stg}	–55 to +125	°C

Caution: Permanent damage to the MCU might result if absolute maximum ratings are exceeded.

Note 1. Ports P205, P206, P400, P401, P407 to P415, P511, P512, and P708 to P713 are 5 V tolerant.

Note 2. Connect AVCC0 and VCC_USB to VCC.

Note 3. See section 2.2.1, T_j/T_a Definition.

Note 4. Contact a Renesas Electronics sales office for information on derating operation when Ta = +85°C to +105°C. Derating is the systematic reduction of load for improved reliability.

Note 5. The upper limit of operating temperature is 85°C or 105°C, depending on the product. For details, see section 1.3, Part Numbering.

2.2.5 Operating and Standby Current

Table 2.7 Operating and standby current (1 of 2)

Item				Symbol	Min	Typ	Max	Unit	Test conditions
Supply current*1	High-speed mode	Maximum*2		I_{CC}*3	-	-	102*2	mA	ICLK = 120 MHz PCLKA = 120 MHz*7 PCLKB = 60 MHz PCLKC = 60 MHz PCLKD = 120 MHz FCLK = 60 MHz BCLK = 120 MHz
		CoreMark®*5			-	19	-		
		Normal mode	All peripheral clocks enabled, while (1) code executing from flash*4		-	26	-		
			All peripheral clocks disabled, while (1) code executing from flash*5, *6		-	12	-		
		Sleep mode*5, *6			-	10	40		
		Increase during BGO operation	Data flash P/E		-	6	-		
			Code flash P/E		-	8	-		
	Low-speed mode*5				-	1.3	-		ICLK = 1 MHz
	Subosc-speed mode*5				-	1.2	-		ICLK = 32.768 kHz
	Software Standby mode				-	1.3	15		Ta ≤ 85°C
					-	1.3	24		Ta ≤ 105°C
	Deep Software Standby mode	Power supplied to Standby SRAM and USB resume detecting unit			-	29	67	μA	Ta ≤ 85°C
					-	29	96		Ta ≤ 105°C
		Power not supplied to SRAM or USB resume detecting unit	Power-on reset circuit low power function disabled		-	11.6	32.4		Ta ≤ 85°C
					-	11.6	40		Ta ≤ 105°C
			Power-on reset circuit low power function enabled		-	4.9	23.5		Ta ≤ 85°C
					-	4.9	31		Ta ≤ 105°C
		Increase when the RTC and AGT are operating	When the low-speed on-chip oscillator (LOCO) is in use		-	4.4	-		-
			When a crystal oscillator for low clock loads is in use		-	1.0	-		-
			When a crystal oscillator for standard clock loads is in use		-	1.4	-		-
	RTC operating while VCC is off (with the battery backup function, only the RTC and sub-clock oscillator operate)		When a crystal oscillator for low clock loads is in use		-	0.9	-		V_{BATT} = 1.8 V, VCC = 0 V
					-	1.1	-		V_{BATT} = 3.3 V, VCC = 0 V
			When a crystal oscillator for standard clock loads is in use		-	1.0	-		V_{BATT} = 1.8 V, VCC = 0 V
					-	1.6	-		V_{BATT} = 3.3 V, VCC = 0 V
Analog power supply current	During 12-bit A/D conversion			AI_{CC}	-	0.8	1.1	mA	-
	During 12-bit A/D conversion with S/H amp				-	2.3	3.3	mA	-
	ACMPHS (1 unit)				-	100	150	μA	-
	Temperature sensor				-	0.1	0.2	mA	-
	During D/A conversion (per unit)		Without AMP output		-	0.1	0.2	mA	-
			With AMP output		-	0.6	1.1	mA	-
	Waiting for A/D, D/A conversion (all units)				-	0.9	1.6	mA	-
	ADC12, DAC12 in standby modes (all units)*8				-	2	8	μA	-
Reference power supply current (VREFH0)	During 12-bit A/D conversion (unit 0)			AI_{REFH0}	-	70	120	μA	-
	Waiting for 12-bit A/D conversion (unit 0)				-	0.07	0.5	μA	-
	ADC12 in standby modes (unit 0)				-	0.07	0.5	μA	-
Reference power supply current (VREFH)	During 12-bit A/D conversion (unit 1)			AI_{REFH}	-	70	120	μA	-
	During D/A conversion (per unit)		Without AMP output		-	0.1	0.4	mA	-
			With AMP ouput		-	0.1	0.4	mA	-
	Waiting for 12-bit A/D (unit 1), D/A (all units) conversion				-	0.07	0.8	μA	-
	ADC12 unit 1 in standby modes				-	0.07	0.8	μA	-

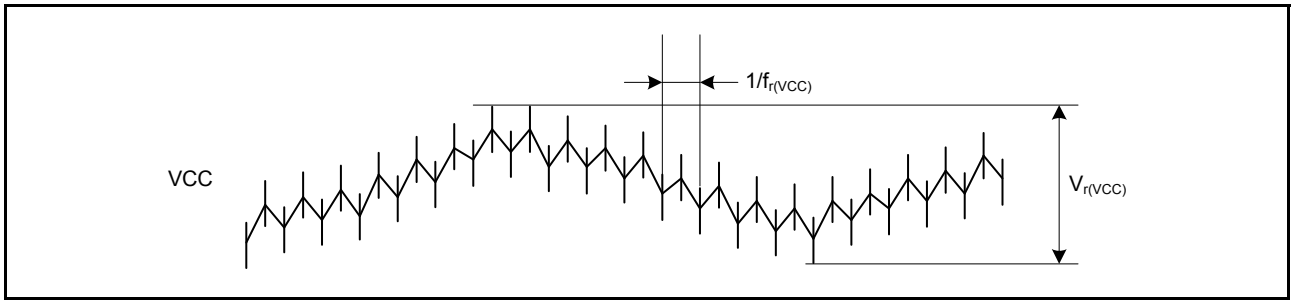

Figure 2.6 Ripple waveform

2.3 AC Characteristics

2.3.1 Frequency

Table 2.10 Operation frequency value in high-speed mode

Item			Symbol	Min	Typ	Max	Unit
Operation frequency	System clock (ICLK*2)		f	-	-	120	MHz
	Peripheral module clock (PCLKA)*2			-	-	120	
	Peripheral module clock (PCLKB)*2			-	-	60	
	Peripheral module clock (PCLKC)*2			-*3	-	60	
	Peripheral module clock (PCLKD)*2			-	-	120	
	Flash interface clock (FCLK)*2			-*1	-	60	
	External bus clock (BCLK)*2			-	-	120	
	EBCLK pin output			-	-	60	
	SDCLK pin output	VCC ≥ 3.0 V		-	-	120	

Note 1. FCLK must run at a frequency of at least 4 MHz when programming or erasing the flash memory.
Note 2. See section 9, Clock Generation Circuit in User's Manual for the relationship between the ICLK, PCLKA, PCLKB, PCLKC, PCLKD, FCLK, and BCLK frequencies.
Note 3. When the ADC12 is used, the PCLKC frequency must be at least 1 MHz.

Table 2.11 Operation frequency value in low-speed mode

Item		Symbol	Min	Typ	Max	Unit
Operation frequency	System clock (ICLK)*2	f	-	-	1	MHz
	Peripheral module clock (PCLKA)*2		-	-	1	
	Peripheral module clock (PCLKB)*2		-	-	1	
	Peripheral module clock (PCLKC)*2,*3		-*3	-	1	
	Peripheral module clock (PCLKD)*2		-	-	1	
	Flash interface clock (FCLK)*1, *2		-	-	1	
	External bus clock (BCLK)		-	-	1	
	EBCLK pin output		-	-	1	

Note 1. Programming or erasing the flash memory is disabled in low-speed mode.
Note 2. See section 9, Clock Generation Circuit in User's Manual for the relationship between the ICLK, PCLKA, PCLKB, PCLKC, PCLKD, FCLK, and BCLK frequencies.
Note 3. When the ADC12 is used, the PCLKC frequency must be set to at least 1 MHz.

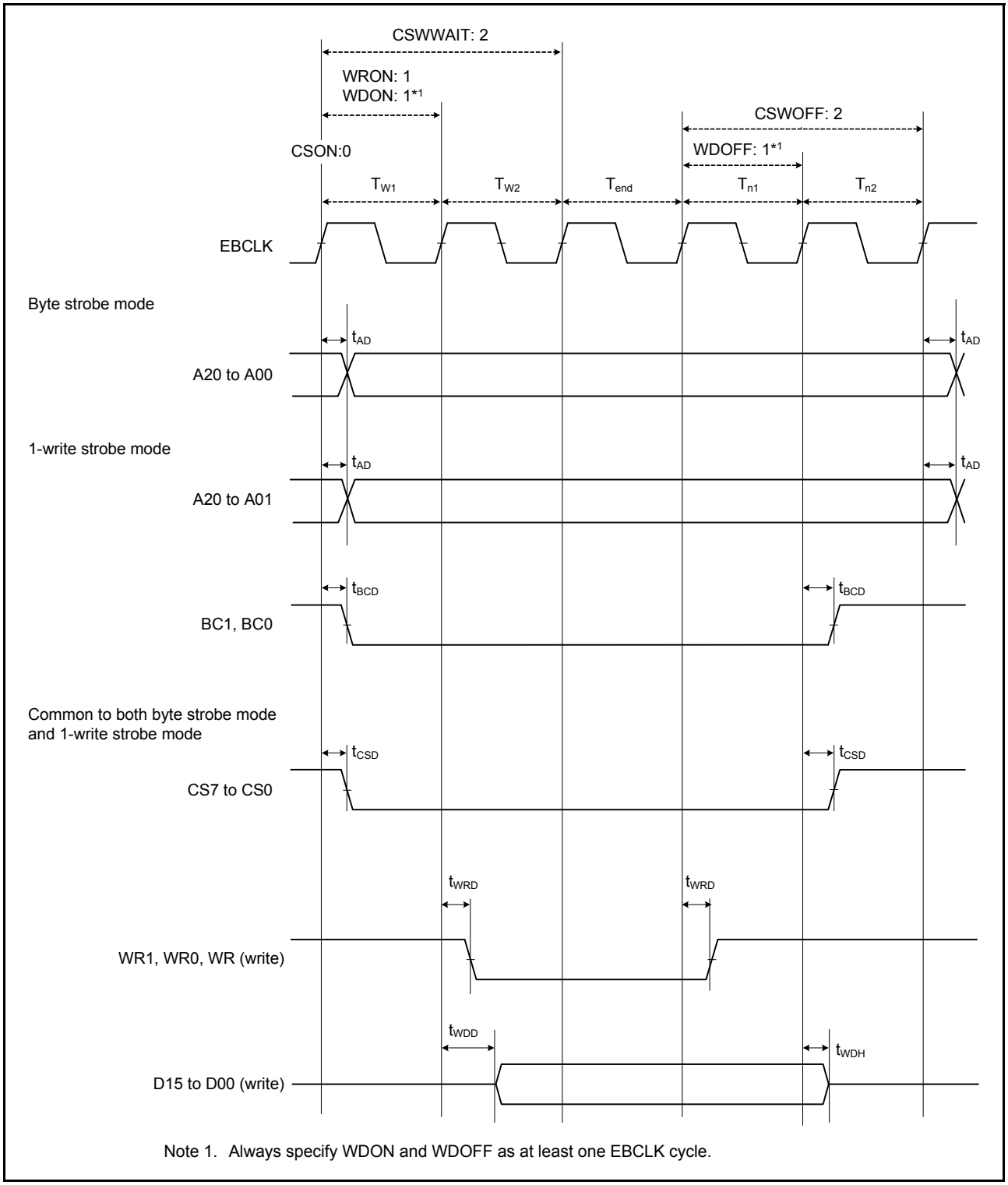

Figure 2.23 External bus timing for normal write cycle with bus clock synchronized

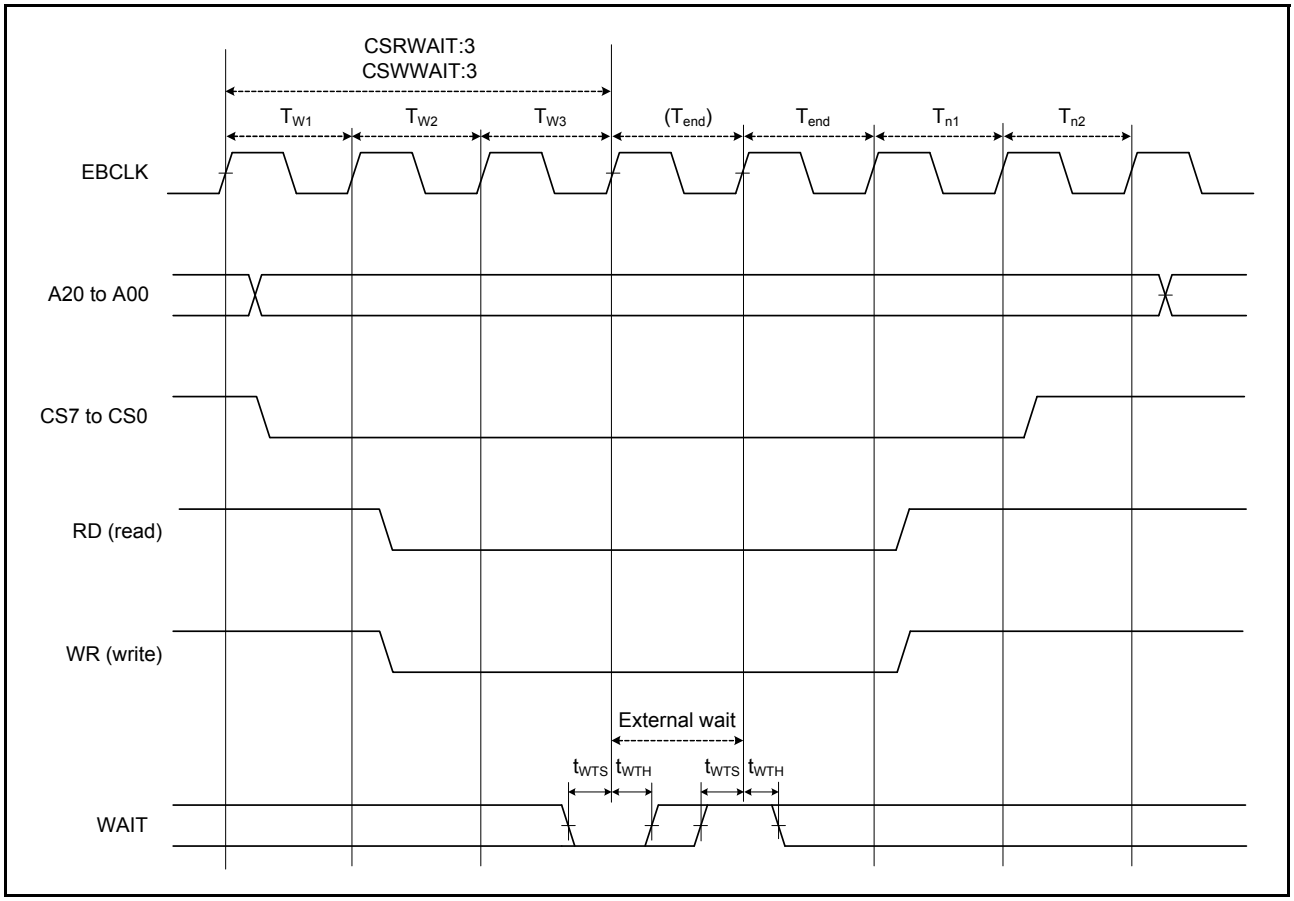

Figure 2.26 External bus timing for external wait control

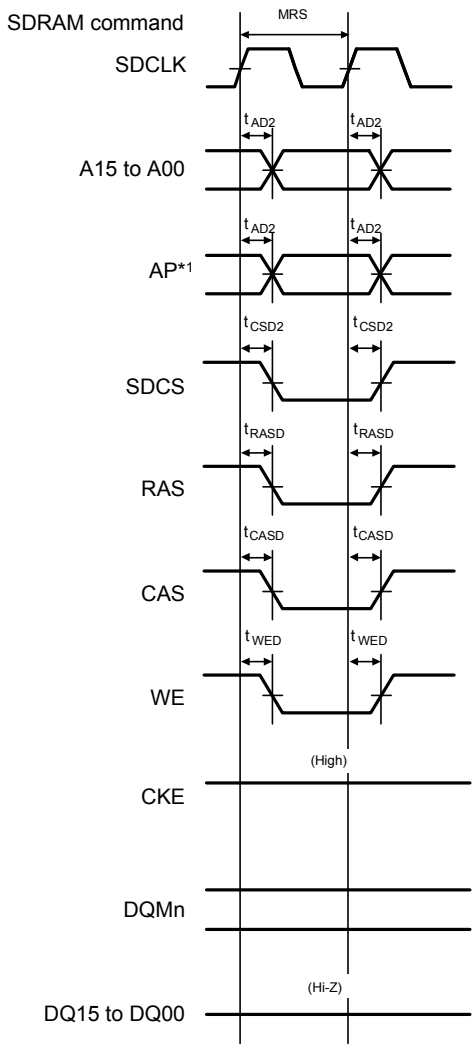

Note 1. Address pins are for output of the precharge-select command (Precharge-sel) for the SDRAM.

Figure 2.29 SDRAM mode register set timing

Note 1. t_{PBcyc}: PCLKB cycle.
Note 2. t_{cac}: CAC count clock source cycle.

2.3.10 SCI Timing

Table 2.22 SCI timing (1)
Conditions: High drive output is selected in the Port Drive Capability bit in the PmnPFS register for the following pins: SCK0 to SCK9. For other pins, middle drive output is selected in the Port Drive Capability bit in the PmnPFS register.

Item			Symbol	Min	Max	Unit*1	Test conditions
SCI	Input clock cycle	Asynchronous	t_{Scyc}	4	-	t_{Pcyc}	Figure 2.40
		Clock synchronous		6	-		
	Input clock pulse width		t_{SCKW}	0.4	0.6	t_{Scyc}	
	Input clock rise time		t_{SCKr}	-	5	ns	
	Input clock fall time		t_{SCKf}	-	5	ns	
	Output clock cycle	Asynchronous	t_{Scyc}	6	-	t_{Pcyc}	
		Clock synchronous		4	-		
	Output clock pulse width		t_{SCKW}	0.4	0.6	t_{Scyc}	
	Output clock rise time		t_{SCKr}	-	5	ns	
	Output clock fall time		t_{SCKf}	-	5	ns	
	Transmit data delay	Clock synchronous	t_{TXD}	-	25	ns	Figure 2.41
	Receive data setup time	Clock synchronous	t_{RXS}	15	-	ns	
	Receive data hold time	Clock synchronous	t_{RXH}	5	-	ns	

Note 1. t_{Pcyc}: PCLKA cycle.

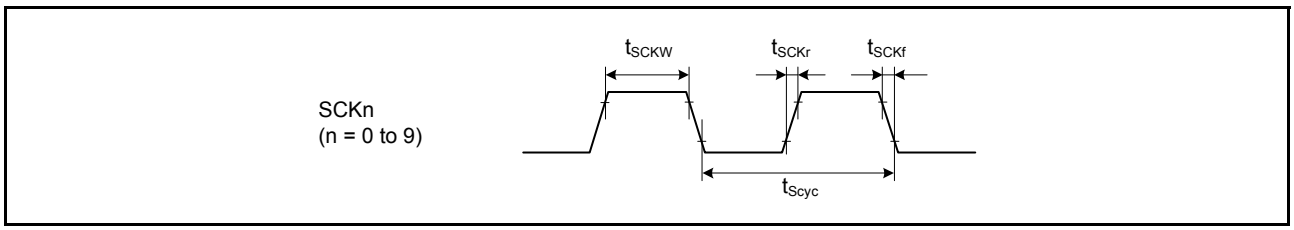

Figure 2.40 SCK clock input/output timing

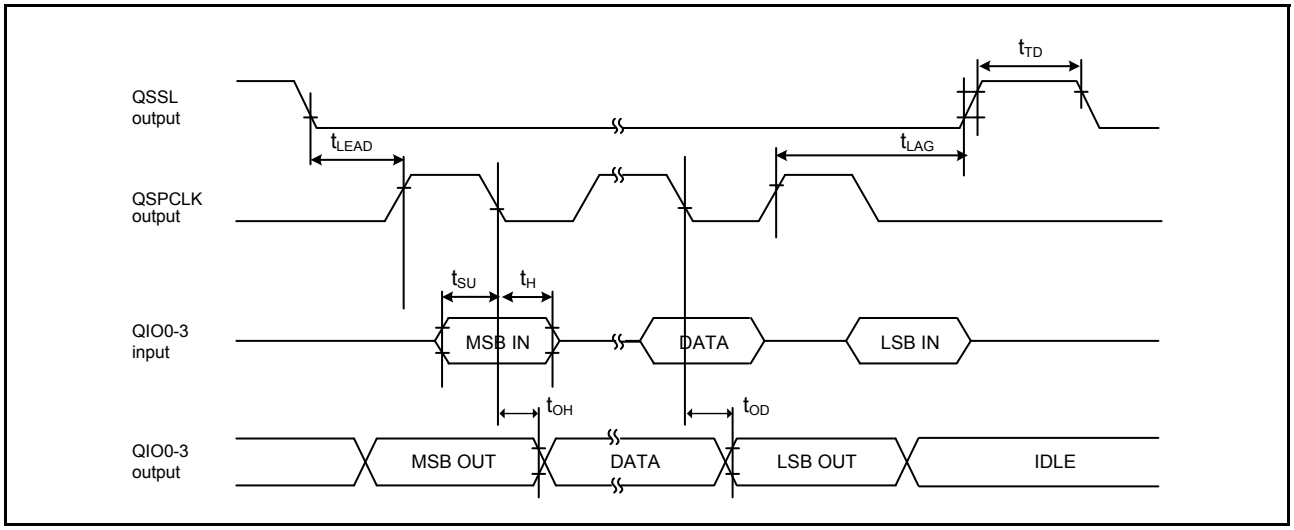

Figure 2.56 Transmit and receive timing

2.3.13 IIC Timing

Table 2.27 IIC timing (1) (1 of 2)

(1) Conditions: Middle drive output is selected in the Port Drive Capability bit in the PmnPFS register for the following pins: SDA0_B, SCL0_B, SDA1_A, SCL1_A, SDA1_B, SCL1_B.

(2) The following pins do not require setting: SCL0_A, SDA0_A, SCL2, SDA2.

(3) Use pins that have a letter appended to their names, for instance "_A" or "_B", to indicate group membership. For the IIC interface, the AC portion of the electrical characteristics is measured for each group.

Item		Symbol	Min*1	Max	Unit	Test conditions*3
IIC (Standard mode, SMBus) ICFER.FMPE = 0	SCL input cycle time	t_{SCL}	6 (12) × t_{IICcyc} + 1300	-	ns	Figure 2.57
	SCL input high pulse width	t_{SCLH}	3 (6) × t_{IICcyc} + 300	-	ns	
	SCL input low pulse width	t_{SCLL}	3 (6) × t_{IICcyc} + 300	-	ns	
	SCL, SDA input rise time	t_{Sr}	-	1000	ns	
	SCL, SDA input fall time	t_{Sf}	-	300	ns	
	SCL, SDA input spike pulse removal time	t_{SP}	0	1 (4) × t_{IICcyc}	ns	
	SDA input bus free time when wakeup function is disabled	t_{BUF}	3 (6) × t_{IICcyc} + 300	-	ns	
	SDA input bus free time when wakeup function is enabled	t_{BUF}	3 (6) × t_{IICcyc} + 4 × t_{Pcyc} + 300	-	ns	
	START condition input hold time when wakeup function is disabled	t_{STAH}	t_{IICcyc} + 300	-	ns	
	START condition input hold time when wakeup function is enabled	t_{STAH}	1 (5) × t_{IICcyc} + t_{Pcyc} + 300	-	ns	
	Repeated START condition input setup time	t_{STAS}	1000	-	ns	
	STOP condition input setup time	t_{STOS}	1000	-	ns	
	Data input setup time	t_{SDAS}	t_{IICcyc} + 50	-	ns	
	Data input hold time	t_{SDAH}	0	-	ns	
	SCL, SDA capacitive load	C_b	-	400	pF	

For the SD/MMC Host interface, the AC portion of the electrical characteristics is measured for each group.

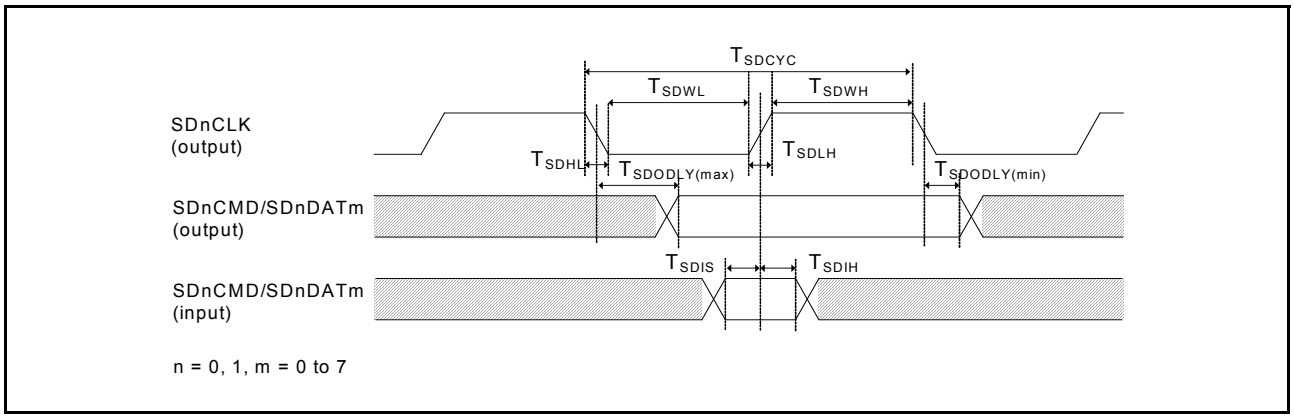

Figure 2.63 SD/MMC Host Interface signal timing

2.3.16 ETHERC Timing

Table 2.31 ETHERC timing

Conditions: ETHERC (RMII): Middle drive output is selected in the Port Drive Capability bit in the PmnPFS register for the following pins: ET0_MDC, ET0_MDIO.
For other pins, high drive output is selected in the Port Drive Capability bit in the PmnPFS register.
ETHERC (MII): Middle drive output is selected in the Port Drive Capability bit in the PmnPFS register.

Item		Symbol	Min	Max	Unit	Test conditions*3
ETHERC (RMII)	REF50CK0 cycle time	T_{ck}	20	-	ns	Figure 2.64 to Figure 2.67
	REF50CK0 frequency, typical 50 MHz	-	-	50 + 100 ppm	MHz	
	REF50CK0 duty	-	35	65	%	
	REF50CK0 rise/fall time	$T_{ckr/ckf}$	0.5	3.5	ns	
	RMII_xxxx*1 output delay	T_{co}	2.5	12.0	ns	
	RMII_xxxx*2 setup time	T_{su}	3	-	ns	
	RMII_xxxx*2 hold time	T_{hd}	1	-	ns	
	RMII_xxxx*1, *2 rise/fall time	T_r/T_f	0.5	4	ns	
	ET0_WOL output delay	t_{WOLd}	1	23.5	ns	Figure 2.68
ETHERC (MII)	ET0_TX_CLK cycle time	t_{Tcyc}	40	-	ns	-
	ET0_TX_EN output delay	t_{TENd}	1	20	ns	Figure 2.69
	ET0_ETXD0 to ET_ETXD3 output delay	t_{MTDd}	1	20	ns	
	ET0_CRS setup time	t_{CRSs}	10	-	ns	
	ET0_CRS hold time	t_{CRSh}	10	-	ns	
	ET0_COL setup time	t_{COLs}	10	-	ns	Figure 2.70
	ET0_COL hold time	t_{COLh}	10	-	ns	
	ET0_RX_CLK cycle time	t_{TRcyc}	40	-	ns	-
	ET0_RX_DV setup time	t_{RDVs}	10	-	ns	Figure 2.71
	ET0_RX_DV hold time	t_{RDVh}	10	-	ns	
	ET0_ERXD0 to ET_ERXD3 setup time	t_{MRDs}	10	-	ns	
	ET0_ERXD0 to ET_ERXD3 hold time	t_{MRDh}	10	-	ns	
	ET0_RX_ER setup time	t_{RERs}	10	-	ns	Figure 2.72
	ET0_RX_ER hold time	t_{RESh}	10	-	ns	
	ET0_WOL output delay	t_{WOLd}	1	23.5	ns	Figure 2.73

Note 1. RMII_TXD_EN, RMII_TXD1, RMII_TXD0.
Note 2. RMII_CRS_DV, RMII_RXD1, RMII_RXD0, RMII_RX_ER.

Note 3. The following pins must use pins that have a letter appended to their name, for instance "_A", "_B", to indicate group membership. For the ETHERC (RMII) Host interface, the AC portion of the electrical characteristics is measured for each group.
REF50CK0_A, REF50CK0_B, RMII0_xxxx_A, RMII0_xxxx_B.

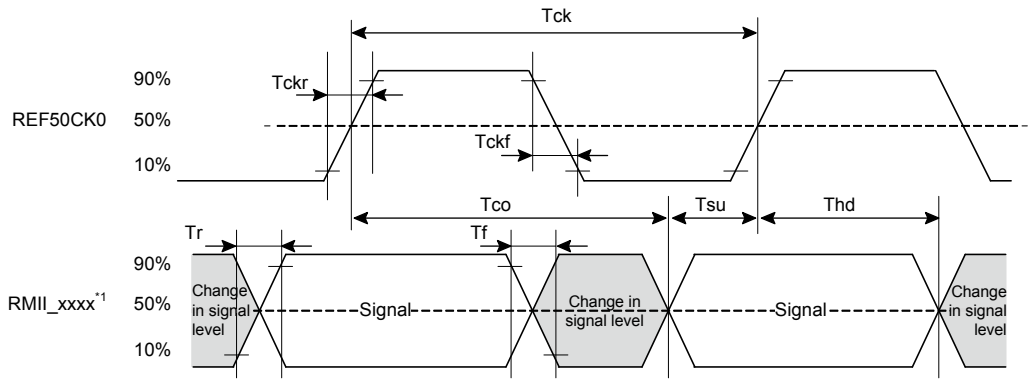

Note 1. RMII_TXD_EN, RMII_TXD1, RMII_TXD0, RMII_CRS_DV, RMII_RXD1, RMII_RXD0, RMII_RX_ER

Figure 2.64 REF50CK0 and RMII signal timing

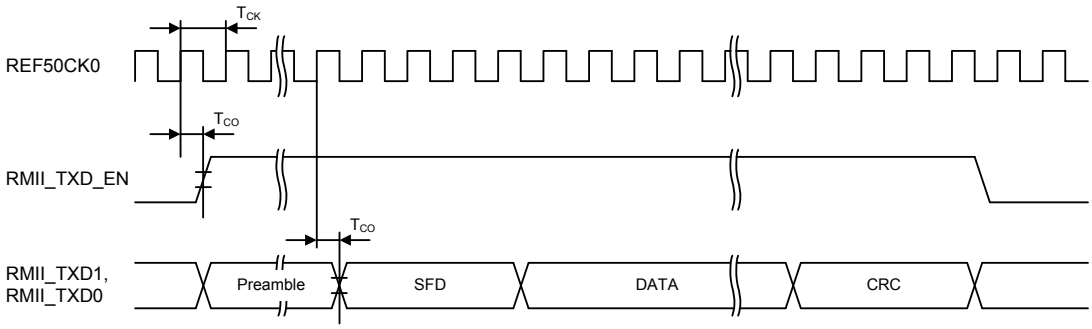

Figure 2.65 RMII transmission timing

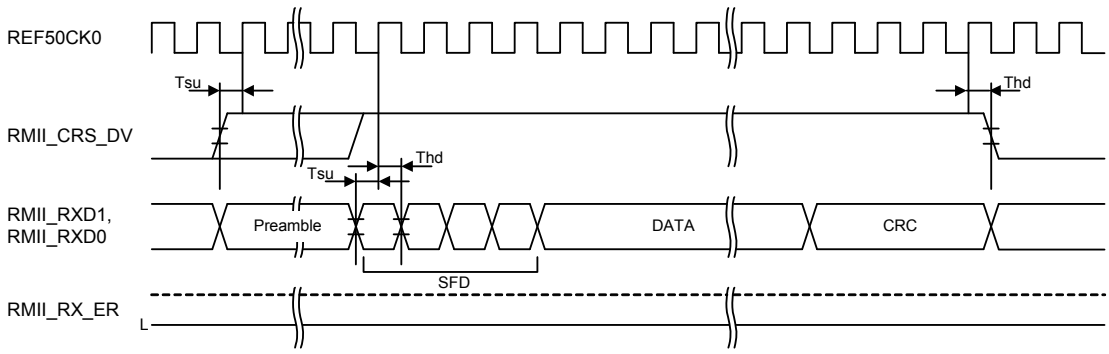

Figure 2.66 RMII reception timing in normal operation

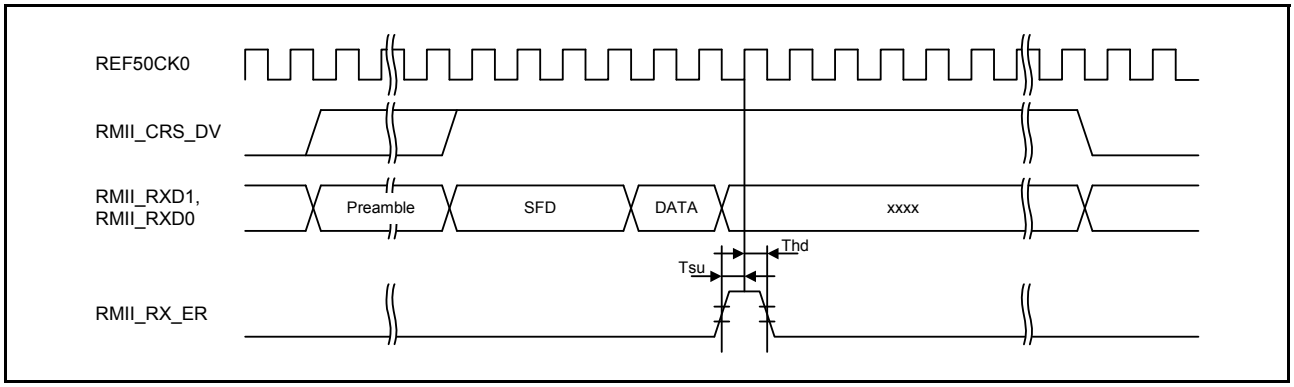

Figure 2.67 RMII reception timing when an error occurs

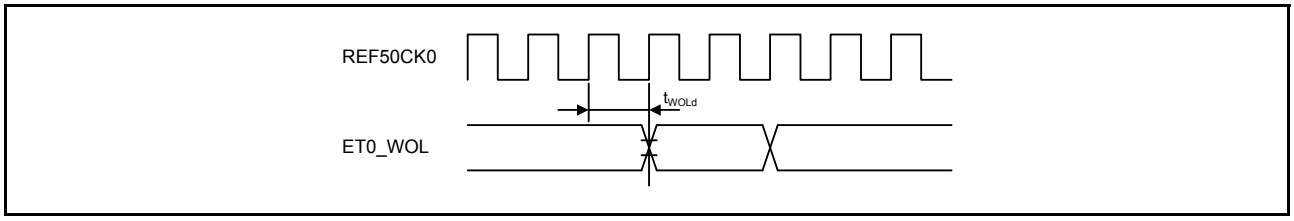

Figure 2.68 WOL output timing for RMII

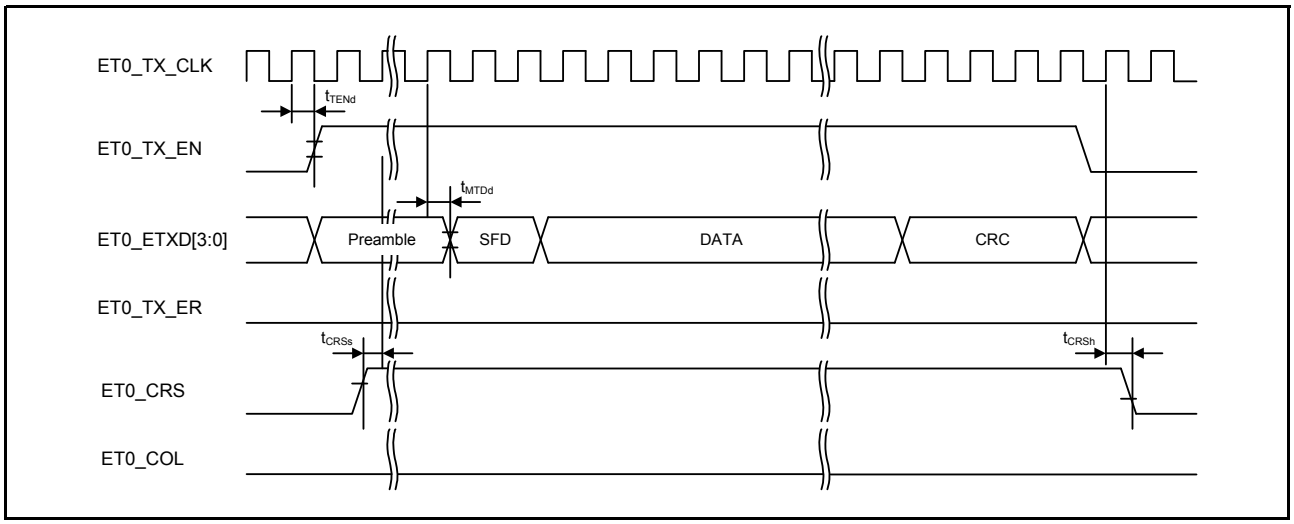

Figure 2.69 MII transmission timing in normal operation

Table 2.34 USBFS full-speed characteristics (USB_DP and USB_DM pin characteristics)
Conditions: VCC = AVCC0 = VCC_USB = VBATT = 3.0 to 3.6 V, 2.7 ≤ VREFH0/VREFH ≤ AVCC0, UCLK = 48 MHz

Item		Symbol	Min	Typ	Max	Unit	Test conditions
Input characteristics	Input high voltage	V_{IH}	2.0	-	-	V	-
	Input low voltage	V_{IL}	-	-	0.8	V	-
	Differential input sensitivity	V_{DI}	0.2	-	-	V	| USB_DP - USB_DM |
	Differential common-mode range	V_{CM}	0.8	-	2.5	V	-
Output characteristics	Output high voltage	V_{OH}	2.8	-	3.6	V	I_{OH} = –200 μA
	Output low voltage	V_{OL}	0.0	-	0.3	V	I_{OL}= 2 mA
	Cross-over voltage	V_{CRS}	1.3	-	2.0	V	Figure 2.79
	Rise time	t_{LR}	4	-	20	ns	
	Fall time	t_{LF}	4	-	20	ns	
	Rise/fall time ratio	t_{LR} / t_{LF}	90	-	111.11	%	t_{FR}/ t_{FF}
	Output resistance	Z_{DRV}	28	-	44	Ω	USBFS: Rs = 27 Ω included
Pull-up and pull-down characteristics	DM pull-up resistance in device controller mode	R_{pu}	0.900	-	1.575	kΩ	During idle state
			1.425	-	3.090	kΩ	During transmission and reception
	USB_DP and USB_DM pull-down resistance in host controller mode	R_{pd}	14.25	-	24.80	kΩ	-

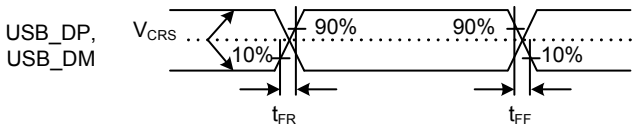

Figure 2.79 USB_DP and USB_DM output timing in full-speed mode

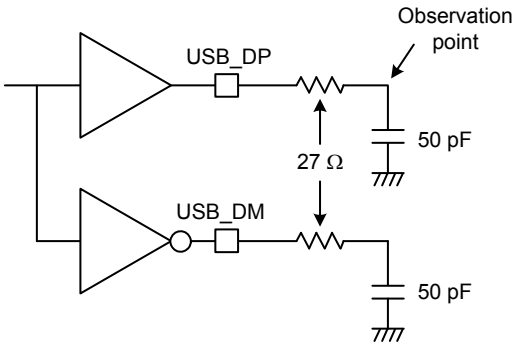

Figure 2.80 Test circuit in full-speed mode

2.5 ADC12 Characteristics

[Normal-precision channel]

Table 2.35 A/D conversion characteristics for unit 0 (1 of 2)
Conditions: PCLKC = 1 to 60 MHz

Item	Min	Typ	Max	Unit	Test conditions
Frequency	1	-	60	MHz	-
Analog input capacitance	-	-	30	pF	-

Table 2.37 A/D conversion characteristics for simultaneous use of channel-dedicated sample-and-hold circuits in unit0 and unit1

Conditions: PCLKC = 30/60 MHz

Item		Min	Typ	Max	Test conditions
Channel-dedicated sample-and-hold circuits in use with continious sampling function enabled (AN000 to AN002)	Offset error	-	±1.5	±5.0	• PCLKC = 60 MHz • Sampling in 15 states
	Full-scale error	-	±2.5	±5.0	
	Absolute accuracy	-	±4.0	±8.0	
Channel-dedicated sample-and-hold circuits in use with continious sampling function enabled (AN100 to AN102)	Offset error	-	±1.5	±5.0	
	Full-scale error	-	±2.5	±5.0	
	Absolute accuracy	-	±4.0	±8.0	
Channel-dedicated sample-and-hold circuits in use with continious sampling function enabled (AN000 to AN002)	Offset error	-	±1.5	±3.5	• PCLKC = 30 MHz • Sampling in 7 states
	Full-scale error	-	±1.5	±3.5	
	Absolute accuracy	-	±3.0	±5.5	
Channel-dedicated sample-and-hold circuits in use with continious sampling function enabled (AN100 to AN102)	Offset error	-	±1.5	±3.5	
	Full-scale error	-	±1.5	±3.5	
	Absolute accuracy	-	±3.0	±5.5	

Note: When simultaneously using channel-dedicated sample-and-hold circuits in unit0 and unit1, setting the ADSHMSR.SHMD bit to 1 is recommended.

Table 2.38 A/D internal reference voltage characteristics

Item	Min	Typ	Max	Unit	Test conditions
A/D internal reference voltage	1.13	1.18	1.23	V	-
Sampling time	4.15	-	-	μs	-

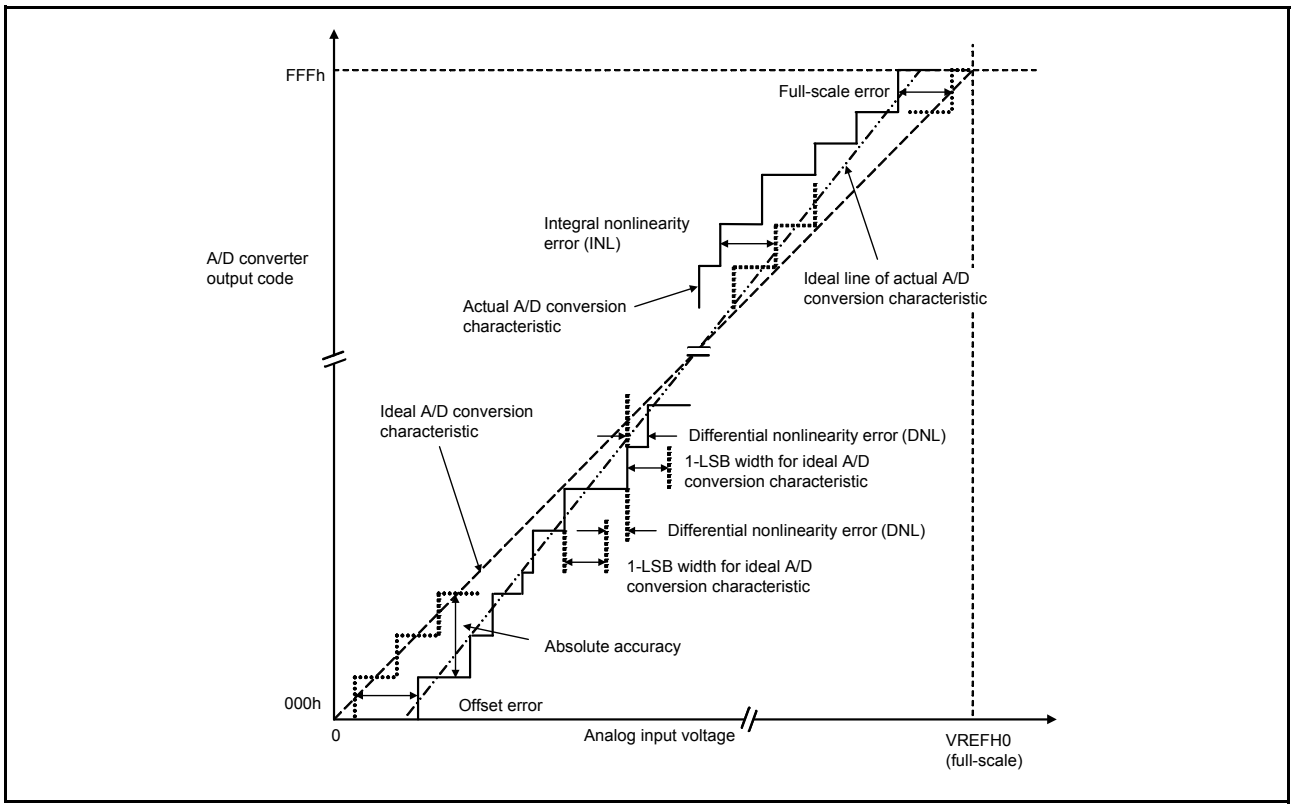

Figure 2.81 Illustration of ADC12 characteristic terms

Table 2.42 Power-on reset circuit and voltage detection circuit characteristics (2 of 2)

Item	Symbol	Min	Typ	Max	Unit	Test conditions
Minimum VCC down time*1	t_{VOFF}	200	-	-	μs	Figure 2.83, Figure 2.84
Response delay	t_{det}	-	-	200	μs	Figure 2.83 to Figure 2.86
LVD operation stabilization time (after LVD is enabled)	$t_{d(E-A)}$	-	-	10	μs	Figure 2.85, Figure 2.86
Hysteresis width (LVD1 and LVD2)	V_{LVH}	-	70	-	mV	

Note 1. The minimum VCC down time indicates the time when VCC is below the minimum value of voltage detection levels V_{POR}, V_{det1}, and V_{det2} for POR and LVD.
Note 2. The low power function is disabled and DEEPCUT[1:0] = 00b or 01b.
Note 3. The low power function is enabled and DEEPCUT[1:0] = 11b.

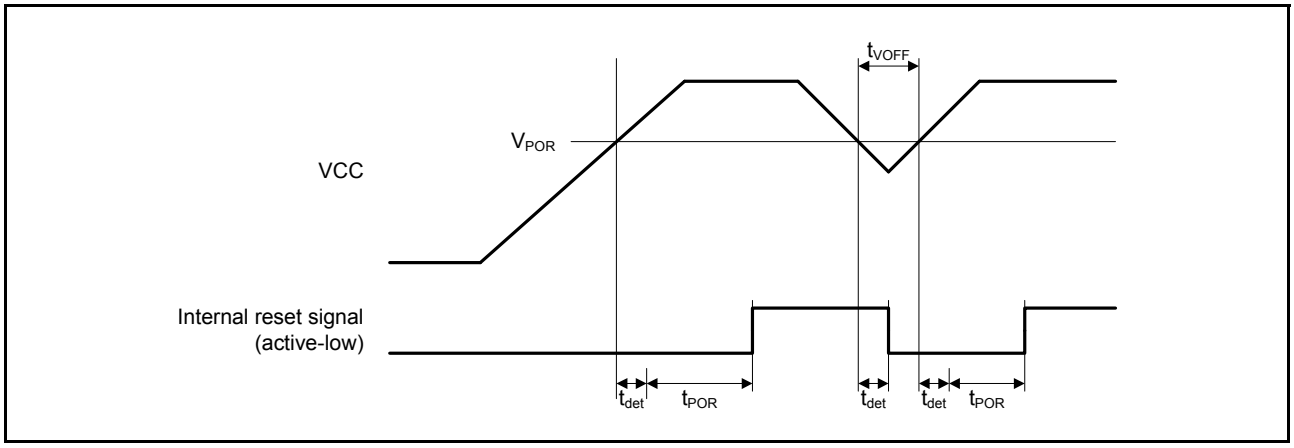

Figure 2.83 Power-on reset timing

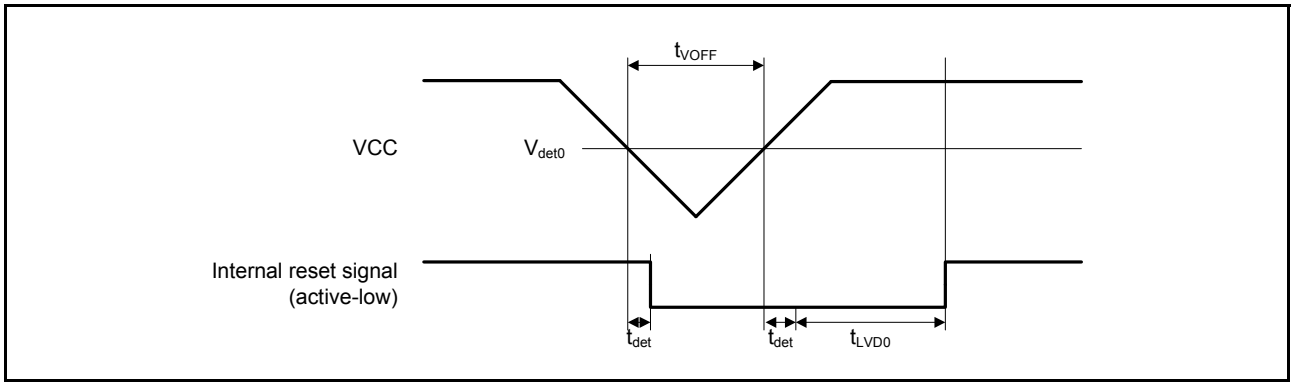

Figure 2.84 Voltage detection circuit timing (V_{det0})

2.13 Flash Memory Characteristics

2.13.1 Code Flash Memory Characteristics

Table 2.46 Code flash memory characteristics
Conditions: Program or erase: FCLK = 4 to 60 MHz
Read: FCLK ≤ 60 MHz

Item		Symbol	FCLK = 4 MHz			20 MHz ≤ FCLK ≤ 60 MHz			Unit	Test conditions
			Min	Typ	Max	Min	Typ	Max		
Programming time N_{PEC} ≤ 100 times	128-byte	t_{P128}	-	0.75	13.2	-	0.34	6.0	ms	
	8-KB	t_{P8K}	-	49	176	-	22	80	ms	
	32-KB	t_{P32K}	-	194	704	-	88	320	ms	
Programming time N_{PEC} > 100 times	128-byte	t_{P128}	-	0.91	15.8	-	0.41	7.2	ms	
	8-KB	t_{P8K}	-	60	212	-	27	96	ms	
	32-KB	t_{P32K}	-	234	848	-	106	384	ms	
Erasure time N_{PEC} ≤ 100 times	8-KB	t_{E8K}	-	78	216	-	43	120	ms	
	32-KB	t_{E32K}	-	283	864	-	157	480	ms	
Erasure time N_{PEC} > 100 times	8-KB	t_{E8K}	-	94	260	-	52	144	ms	
	32-KB	t_{E32K}	-	341	1040	-	189	576	ms	
Reprogramming/erasure cycle*4		N_{PEC}	10000*1	-	-	10000*1	-	-	Times	
Suspend delay during programming		t_{SPD}	-	-	264	-	-	120	μs	
First suspend delay during erasure in suspend priority mode		t_{SESD1}	-	-	216	-	-	120	μs	
Second suspend delay during erasure in suspend priority mode		t_{SESD2}	-	-	1.7	-	-	1.7	ms	
Suspend delay during erasure in erasure priority mode		t_{SEED}	-	-	1.7	-	-	1.7	ms	
Forced stop command		t_{FD}	-	-	32	-	-	20	μs	
Data hold time*2		t_{DRP}	10*2, *3	-	-	10*2, *3	-	-	Years	
			30*2, *3	-	-	30*2, *3	-	-		Ta = +85°C

Note 1. This is the minimum number of times to guarantee all the characteristics after reprogramming. The guaranteed range is from 1 to the minimum value.
Note 2. This indicates the minimum value of the characteristic when reprogramming is performed within the specified range.
Note 3. This result is obtained from reliability testing.
Note 4. The reprogram/erase cycle is the number of erasures for each block. When the reprogram/erase cycle is n times (n = 10,000), erasing can be performed n times for each block. For example, when 128-byte programming is performed 64 times for different addresses in 8-KB blocks, and then the entire block is erased, the reprogram/erase cycle is counted as one. However, programming the same address several times as one erasure is not enabled. Overwriting is prohibited.

Table 2.48 Boundary scan characteristics (2 of 2)

Item	Symbol	Min	Typ	Max	Unit	Test conditions
TMS setup time	t_{TMSS}	20	-	-	ns	Figure 2.90
TMS hold time	t_{TMSH}	20	-	-	ns	
TDI setup time	t_{TDIS}	20	-	-	ns	
TDI hold time	t_{TDIH}	20	-	-	ns	
TDO data delay	t_{TDOD}	-	-	40	ns	
Boundary scan circuit startup time*1	T_{BSSTUP}	t_{RESWP}	-	-	-	Figure 2.91

Note 1. Boundary scan does not function until the power-on reset becomes negative.

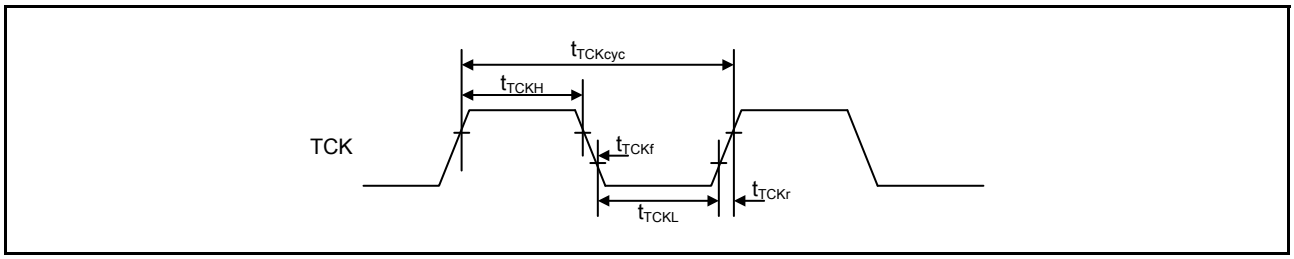

Figure 2.89 Boundary scan TCK timing

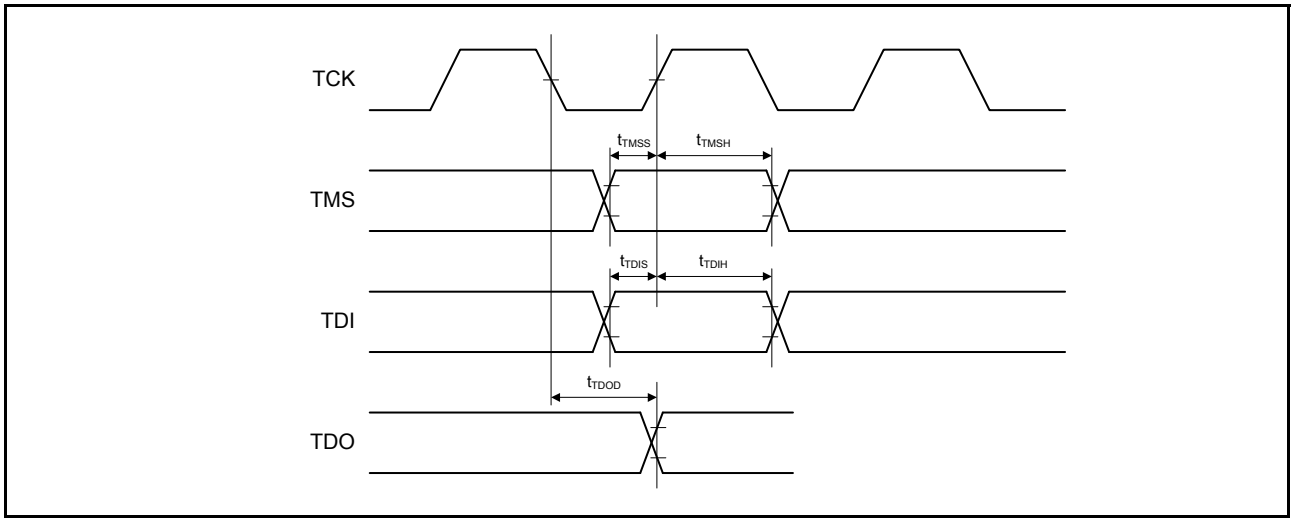

Figure 2.90 Boundary scan input/output timing

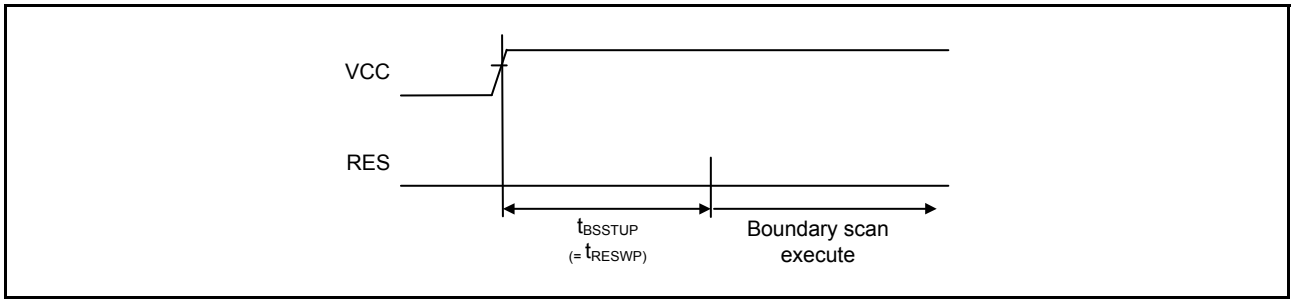

Figure 2.91 Boundary scan circuit startup timing

2.16 Serial Wire Debug (SWD)

Table 2.50 SWD

Item	Symbol	Min	Typ	Max	Unit	Test conditions
SWCLK clock cycle time	$t_{SWCKcyc}$	40	-	-	ns	Figure 2.94
SWCLK clock high pulse width	t_{SWCKH}	15	-	-	ns	
SWCLK clock low pulse width	t_{SWCKL}	15	-	-	ns	
SWCLK clock rise time	t_{SWCKr}	-	-	5	ns	
SWCLK clock fall time	t_{SWCKf}	-	-	5	ns	
SWDIO setup time	t_{SWDS}	8	-	-	ns	Figure 2.95
SWDIO hold time	t_{SWDH}	8	-	-	ns	
SWDIO data delay time	t_{SWDD}	2	-	28	ns	

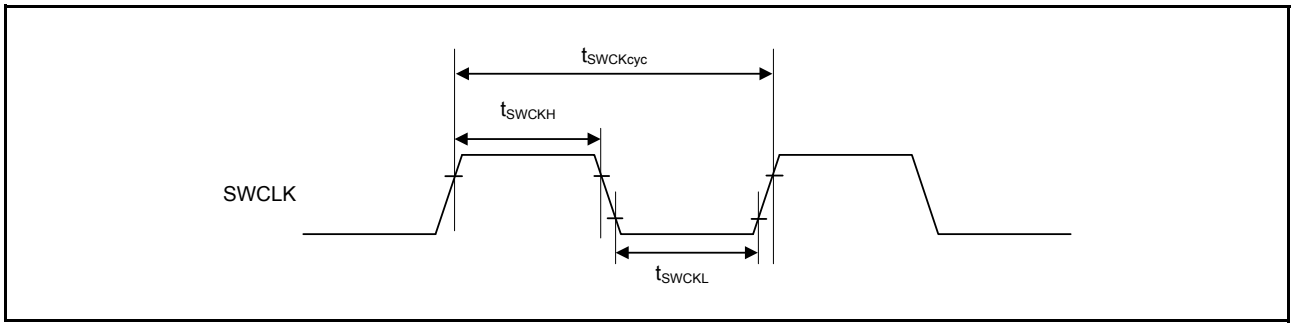

Figure 2.94 SWD SWCLK timing

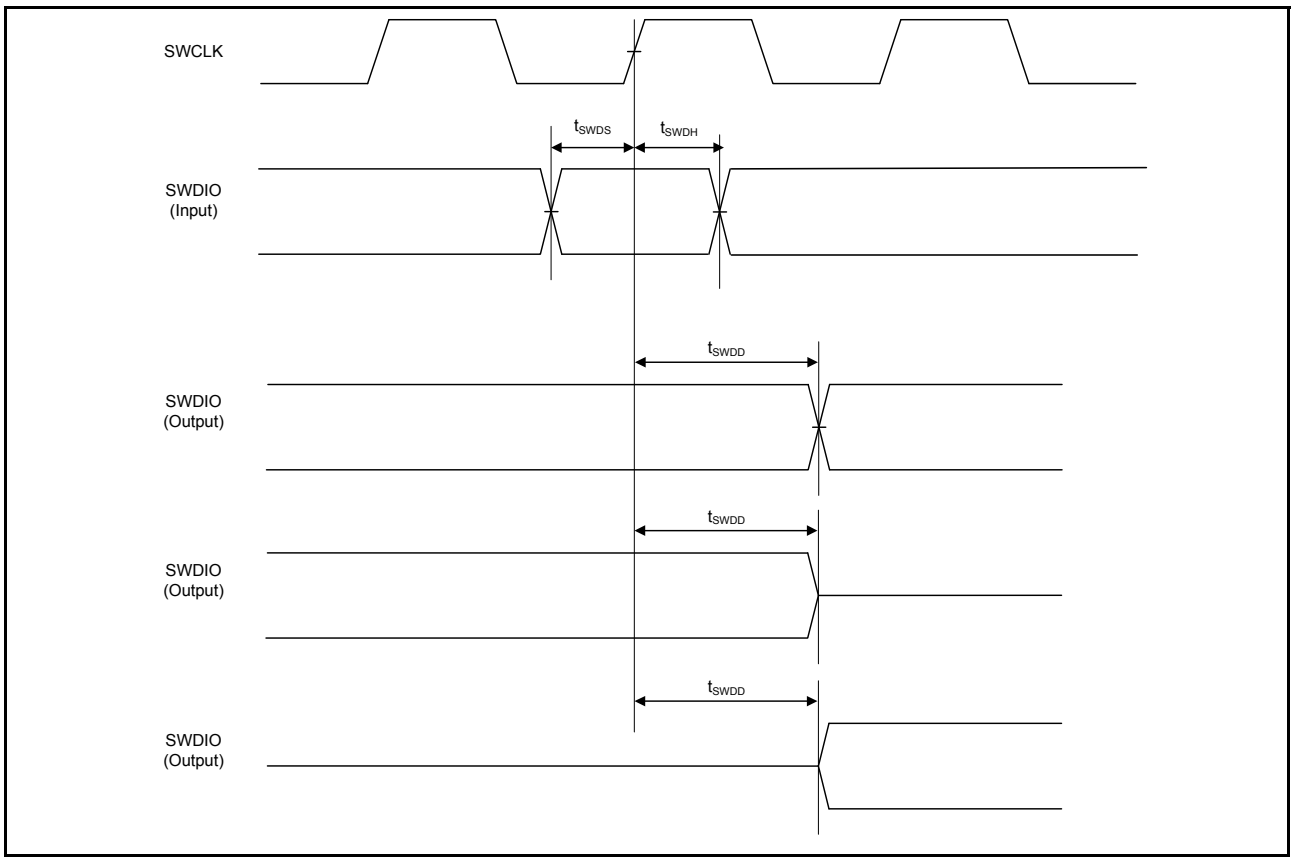

Figure 2.95 SWD input/output timing

JEITA Package Code	RENESAS Code	Previous Code	MASS (Typ) [g]
P-LFQFP144-20x20-0.50	PLQP0144KA-B	—	1.2

Unit: mm

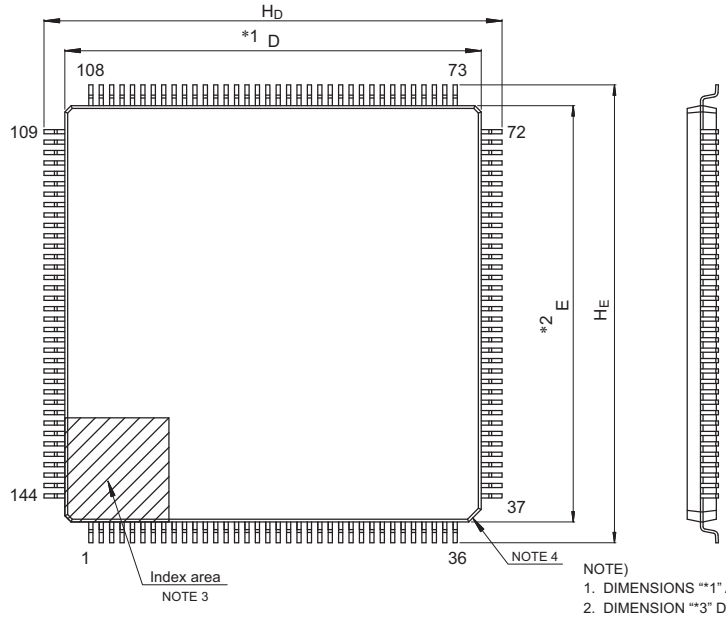

NOTE)
1. DIMENSIONS "*1" AND "*2" DO NOT INCLUDE MOLD FLASH.
2. DIMENSION "*3" DOES NOT INCLUDE TRIM OFFSET.
3. PIN 1 VISUAL INDEX FEATURE MAY VARY, BUT MUST BE LOCATED WITHIN THE HATCHED AREA.
4. CHAMFERS AT CORNERS ARE OPTIONAL, SIZE MAY VARY.

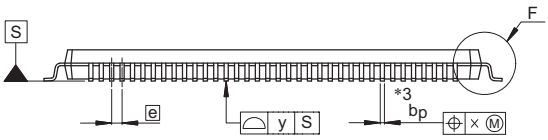

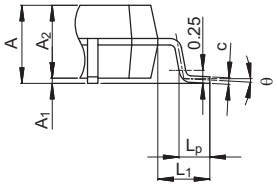

Detail F

Reference Symbol	Dimensions in millimeters		
	Min	Nom	Max
D	19.9	20.0	20.1
E	19.9	20.0	20.1
A_2	—	1.4	—
H_D	21.8	22.0	22.2
H_E	21.8	22.0	22.2
A	—	—	1.7
A_1	0.05	—	0.15
b_p	0.17	0.20	0.27
c	0.09	—	0.20
θ	0°	3.5°	8°
e	—	0.5	—
x	—	—	0.08
y	—	—	0.08
L_p	0.45	0.6	0.75
L_1	—	1.0	—

© 2016 Renesas Electronics Corporation. All rights reserved.

Figure 1.2 144-pin LQFP

General Precautions

1. Precaution against Electrostatic Discharge (ESD)

   A strong electrical field, when exposed to a CMOS device, can cause destruction of the gate oxide and ultimately degrade the device operation. Steps must be taken to stop the generation of static electricity as much as possible, and quickly dissipate it when it occurs. Environmental control must be adequate. When it is dry, a humidifier should be used. This is recommended to avoid using insulators that can easily build up static electricity. Semiconductor devices must be stored and transported in an anti-static container, static shielding bag or conductive material. All test and measurement tools including work benches and floors must be grounded. The operator must also be grounded using a wrist strap. Semiconductor devices must not be touched with bare hands. Similar precautions must be taken for printed circuit boards with mounted semiconductor devices.

2. Processing at power-on

   The state of the product is undefined at the time when power is supplied. The states of internal circuits in the LSI are indeterminate and the states of register settings and pins are undefined at the time when power is supplied. In a finished product where the reset signal is applied to the external reset pin, the states of pins are not guaranteed from the time when power is supplied until the reset process is completed. In a similar way, the states of pins in a product that is reset by an on-chip power-on reset function are not guaranteed from the time when power is supplied until the power reaches the level at which resetting is specified.

3. Input of signal during power-off state

   Do not input signals or an I/O pull-up power supply while the device is powered off. The current injection that results from input of such a signal or I/O pull-up power supply may cause malfunction and the abnormal current that passes in the device at this time may cause degradation of internal elements. Follow the guideline for input signal during power-off state as described in your product documentation.

4. Handling of unused pins

   Handle unused pins in accordance with the directions given under handling of unused pins in the manual. The input pins of CMOS products are generally in the high-impedance state. In operation with an unused pin in the open-circuit state, extra electromagnetic noise is induced in the vicinity of the LSI, an associated shoot-through current flows internally, and malfunctions occur due to the false recognition of the pin state as an input signal become possible.

5. Clock signals

   After applying a reset, only release the reset line after the operating clock signal becomes stable. When switching the clock signal during program execution, wait until the target clock signal is stabilized. When the clock signal is generated with an external resonator or from an external oscillator during a reset, ensure that the reset line is only released after full stabilization of the clock signal. Additionally, when switching to a clock signal produced with an external resonator or by an external oscillator while program execution is in progress, wait until the target clock signal is stable.

6. Voltage application waveform at input pin

   Waveform distortion due to input noise or a reflected wave may cause malfunction. If the input of the CMOS device stays in the area between V_{IL} (Max.) and V_{IH} (Min.) due to noise, for example, the device may malfunction. Take care to prevent chattering noise from entering the device when the input level is fixed, and also in the transition period when the input level passes through the area between V_{IL} (Max.) and V_{IH} (Min.).

7. Prohibition of access to reserved addresses

   Access to reserved addresses is prohibited. The reserved addresses are provided for possible future expansion of functions. Do not access these addresses as the correct operation of the LSI is not guaranteed.

8. Differences between products

   Before changing from one product to another, for example to a product with a different part number, confirm that the change will not lead to problems. The characteristics of a microprocessing unit or microcontroller unit products in the same group but having a different part number might differ in terms of internal memory capacity, layout pattern, and other factors, which can affect the ranges of electrical characteristics, such as characteristic values, operating margins, immunity to noise, and amount of radiated noise. When changing to a product with a different part number, implement a system-evaluation test for the given product.