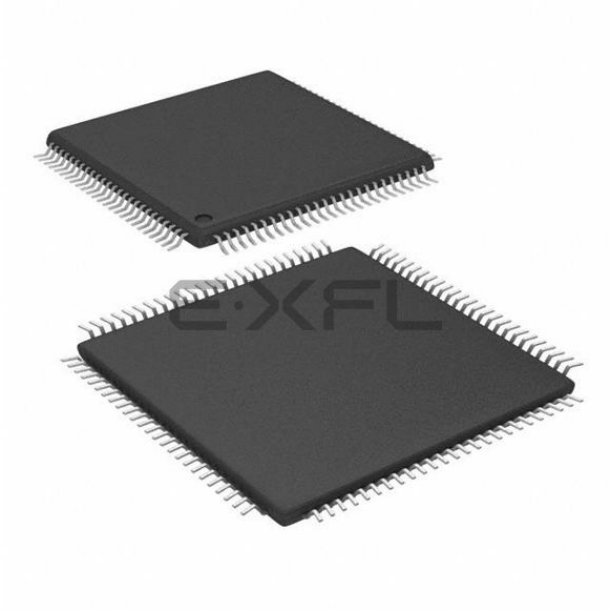

Welcome to E-XFL.COM

What is "Embedded - Microcontrollers"?

"Embedded - Microcontrollers" refer to small, integrated circuits designed to perform specific tasks within larger systems. These microcontrollers are essentially compact computers on a single chip, containing a processor core, memory, and programmable input/output peripherals. They are called "embedded" because they are embedded within electronic devices to control various functions, rather than serving as standalone computers. Microcontrollers are crucial in modern electronics, providing the intelligence and control needed for a wide range of applications.

Applications of "Embedded - Microcontrollers"

Details	
Product Status	Active
Core Processor	MIPS32® M4K™
Core Size	32-Bit Single-Core
Speed	80MHz
Connectivity	I²C, IrDA, LINbus, PMP, SPI, UART/USART, USB OTG
Peripherals	Brown-out Detect/Reset, DMA, POR, PWM, WDT
Number of I/O	85
Program Memory Size	512KB (512K x 8)
Program Memory Type	FLASH
EEPROM Size	-
RAM Size	32K x 8
Voltage - Supply (Vcc/Vdd)	2.3V ~ 3.6V
Data Converters	A/D 16x10b
Oscillator Type	Internal
Operating Temperature	-40°C ~ 105°C (TA)
Mounting Type	Surface Mount
Package / Case	100-TQFP
Supplier Device Package	100-TQFP (12x12)
Purchase URL	https://www.e-xfl.com/product-detail/microchip-technology/pic32mx460f512lt-80v-pt

TABLE 1: PIC32MX GENERAL PURPOSE – FEATURES

GENERAL PURPOSE														
Device	**Pins**	**Packages(2)**	**MHz**	**Program Memory (KB)**	**Data Memory (KB)**	**Timers/Capture/Compare**	**Programmable DMA Channels**	**VREG**	**Trace**	**EUART/SPI/I²C™**	**10-bit ADC (ch)**	**Comparators**	**PMP/PSP**	**JTAG**
PIC32MX320F032H	64	PT, MR	40	32 + 12(1)	8	5/5/5	0	Yes	No	2/2/2	16	2	Yes	Yes
PIC32MX320F064H	64	PT, MR	80	64 + 12(1)	16	5/5/5	0	Yes	No	2/2/2	16	2	Yes	Yes
PIC32MX320F128H	64	PT, MR	80	128 + 12(1)	16	5/5/5	0	Yes	No	2/2/2	16	2	Yes	Yes
PIC32MX340F128H	64	PT, MR	80	128 + 12(1)	32	5/5/5	4	Yes	No	2/2/2	16	2	Yes	Yes
PIC32MX340F256H	64	PT, MR	80	256 + 12(1)	32	5/5/5	4	Yes	No	2/2/2	16	2	Yes	Yes
PIC32MX340F512H	64	PT, MR	80	512 + 12(1)	32	5/5/5	4	Yes	No	2/2/2	16	2	Yes	Yes
PIC32MX320F128L	100	PT	80	128 + 12(1)	16	5/5/5	0	Yes	No	2/2/2	16	2	Yes	Yes
	121	BG												
PIC32MX340F128L	100	PT	80	128 + 12(1)	32	5/5/5	4	Yes	No	2/2/2	16	2	Yes	Yes
	121	BG												
PIC32MX360F256L	100	PT	80	256 + 12(1)	32	5/5/5	4	Yes	Yes	2/2/2	16	2	Yes	Yes
	121	BG												
PIC32MX360F512L	100	PT	80	512 + 12(1)	32	5/5/5	4	Yes	Yes	2/2/2	16	2	Yes	Yes
	121	BG												

Legend: PT = TQFP MR = QFN BG = XBGA

Note 1: This device features 12 KB Boot Flash memory.

2: See Legend for an explanation of the acronyms. See **Section 30.0 “Packaging Information”** for details.

© 2011 Microchip Technology Inc.

TABLE 3: PIN NAMES: PIC32MX320F128L, PIC32MX340F128L, PIC32MX360F128L, AND PIC32MX360F512L DEVICES

Pin Number	Full Pin Name
A1	PMD4/RE4
A2	PMD3/RE3
A3	TRD0/RG13
A4	PMD0/RE0
A5	PMD8/RG0
A6	PMD10/RF1
A7	ENVREG
A8	VSS
A9	IC5/PMD12/RD12
A10	OC3/RD2
A11	OC2/RD1
B1	No Connect (NC)
B2	RG15
B3	PMD2/RE2
B4	PMD1/RE1
B5	TRD3/RA7
B6	PMD11/RF0
B7	VCAP/VCORE
B8	PMRD/CN14/RD5
B9	OC4/RD3
B10	VSS
B11	SOSCO/T1CK/CN0/RC14
C1	PMD6/RE6
C2	VDD
C3	TRD1/RG12
C4	TRD2/RG14
C5	TRCLK/RA6
C6	No Connect (NC)
C7	PMD15/CN16/RD7
C8	OC5/PMWR/CN13/RD4
C9	VDD
C10	SOSCI/CN1/RC13
C11	IC4/PMCS1/PMA14/RD11
D1	T2CK/RC1
D2	PMD7/RE7
D3	PMD5/RE5
D4	VSS
D5	VSS
D6	No Connect (NC)
D7	PMD14/CN15/RD6
D8	PMD13/CN19/RD13
D9	OC1/RD0
D10	No Connect (NC)
D11	IC3/PMCS2/PMA15/RD10
E1	T5CK/RC4
E2	T4CK/RC3
E3	SCK2/PMA5/CN8/RG6
E4	T3CK/RC2
E5	VDD
E6	PMD9/RG1
E7	VSS

Pin Number	Full Pin Name
E8	INT4/RA15
E9	RTCC/IC1/RD8
E10	IC2/RD9
E11	INT3/RA14
F1	$\overline{\text{MCLR}}$
F2	SDO2/PMA3/CN10/RG8
F3	$\overline{\text{SS2}}$/PMA2/CN11/RG9
F4	SDI2/PMA4/CN9/RG7
F5	VSS
F6	No Connect (NC)
F7	No Connect (NC)
F8	VDD
F9	OSC1/CLKI/RC12
F10	VSS
F11	OSC2/CLKO/RC15
G1	INT1/RE8
G2	INT2/RE9
G3	TMS/RA0
G4	No Connect (NC)
G5	VDD
G6	VSS
G7	VSS
G8	No Connect (NC)
G9	TDO/RA5
G10	SDA2/RA3
G11	TDI/RA4
H1	AN5/C1IN+/CN7/RB5
H2	AN4/C1IN-/CN6/RB4
H3	VSS
H4	VDD
H5	No Connect (NC)
H6	VDD
H7	No Connect (NC)
H8	SDI1/RF7
H9	SCK1/INT0/RF6
H10	SCL1/RG2
H11	SCL2/RA2
J1	AN3/C2IN+/CN5/RB3
J2	AN2/C2IN-/$\overline{\text{SS1}}$/CN4/RB2
J3	PGED2/AN7/RB7
J4	AVDD
J5	AN11/PMA12/RB11
J6	TCK/RA1
J7	AN12/PMA11/RB12
J8	No Connect (NC)
J9	No Connect (NC)
J10	SDO1/RF8
J11	SDA1/RG3
K1	PGEC1/AN1/CN3/RB1
K2	PGED1/AN0/CN2/RB0
K3	VREF+/CVREF+/PMA6/RA10

© 2011 Microchip Technology Inc.

Pin Diagrams (Continued)

64-Pin QFN (USB)

■ = Pins are up to 5V tolerant

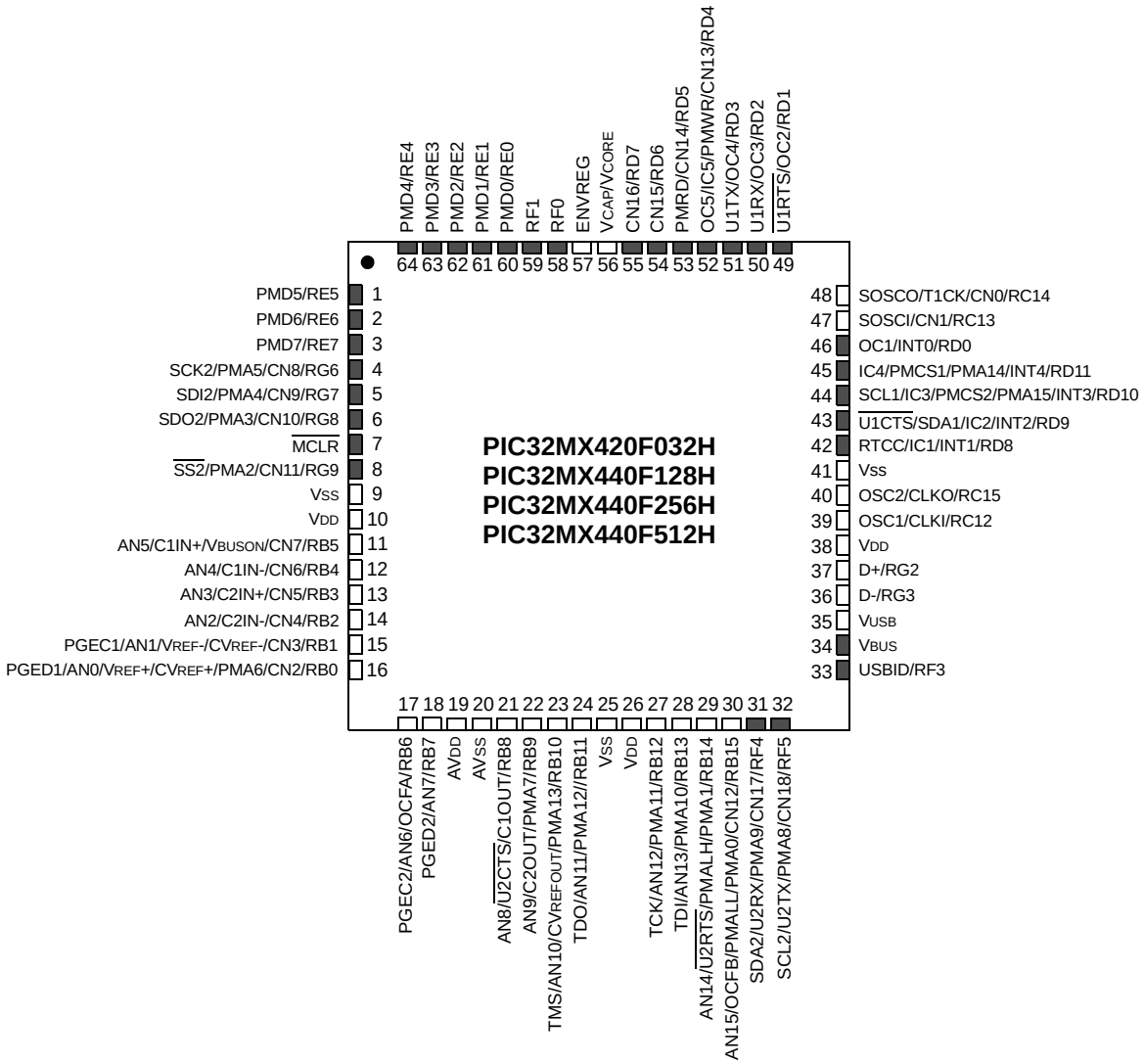

Note: The metal plane at the bottom of the device is not connected to any pins and is recommended to be connected to VSS externally.

© 2011 Microchip Technology Inc.

Table of Contents

1.0 Device Overview 21
2.0 Guidelines for Getting Started with 32-bit Microcontrollers 31
3.0 CPU 37
4.0 Memory Organization 43
5.0 Flash Program Memory 85
6.0 Resets 87
7.0 Interrupt Controller 89
8.0 Oscillator Configuration 93
9.0 Prefetch Cache 95
10.0 Direct Memory Access (DMA) Controller 97
11.0 USB On-The-Go (OTG) 99
12.0 I/O Ports 101
13.0 Timer1 103
14.0 Timer2/3 and Timer4/5 105
15.0 Input Capture 107
16.0 Output Compare 109
17.0 Serial Peripheral Interface (SPI) 111
18.0 Inter-Integrated Circuit™ (I^2C™) 113
19.0 Universal Asynchronous Receiver Transmitter (UART) 115
20.0 Parallel Master Port (PMP) 119
21.0 Real-Time Clock and Calendar (RTCC) 121
22.0 10-bit Analog-to-Digital Converter (ADC) 123
23.0 Comparator 125
24.0 Comparator Voltage Reference (CVREF) 127
25.0 Power-Saving Features 129
26.0 Special Features 131
27.0 Instruction Set 141
28.0 Development Support 147
29.0 Electrical Characteristics 151
30.0 Packaging Information 191
Index 209

© 2011 Microchip Technology Inc.

TABLE 1-1: PINOUT I/O DESCRIPTIONS (CONTINUED)

Pin Name	Pin Number(1)			Pin Type	Buffer Type	Description
	64-pin QFN/TQFP	100-pin TQFP	121-pin XBGA			
PGED2	18	27	J3	I/O	ST	Data I/O pin for programming/debugging communication channel 2.
PGEC2	17	26	L1	I	ST	Clock input pin for programming/debugging communication channel 2.
$\overline{\text{MCLR}}$	7	13	F1	I/P	ST	Master Clear (Reset) input. This pin is an active-low Reset to the device.
AVDD	19	30	J4	P	P	Positive supply for analog modules. This pin must be connected at all times.
AVSS	20	31	L3	P	P	Ground reference for analog modules.
VDD	10, 26, 38	2, 16, 37, 46, 62	C2, C9, E5, F8, G5, H4, H6, K8	P	—	Positive supply for peripheral logic and I/O pins.
VCORE/ VCAP	56	85	B7	P	—	Capacitor for Internal Voltage Regulator.
Vss	9, 25, 41	15, 36, 45, 65, 75	A8, B10, D4, D5, E7, F10, F5, G6, G7, H3	P	—	Ground reference for logic and I/O pins.
VREF+	16	29	K3	I	Analog	Analog voltage reference (high) input.
VREF-	15	28	L2	I	Analog	Analog voltage reference (low) input.

Legend: CMOS = CMOS compatible input or output; Analog = Analog input; P = Power; ST = Schmitt Trigger input with CMOS levels; O = Output; I = Input; TTL = TTL input buffer

Note 1: Pin numbers are provided for reference only. See the **"Pin Diagrams"** section for device pin availability.

FIGURE 2-1: RECOMMENDED MINIMUM CONNECTION

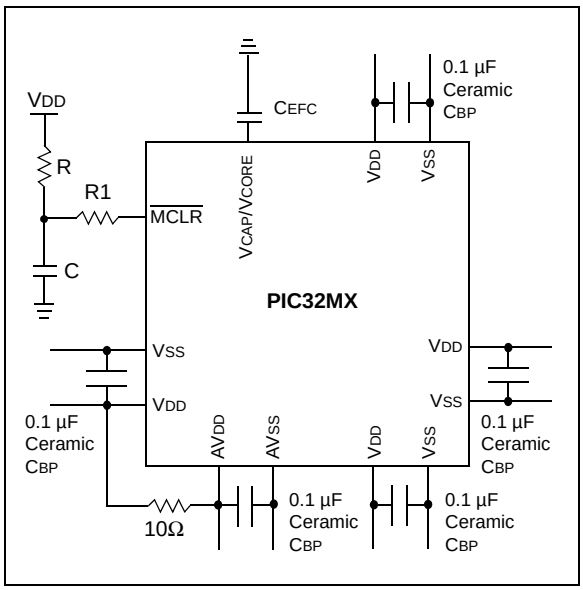

2.2.1 BULK CAPACITORS

The use of a bulk capacitor is recommended to improve power supply stability. Typical values range from 4.7 µF to 47 µF. This capacitor should be located as close to the device as possible.

2.3 Capacitor on Internal Voltage Regulator (VCAP/VCORE)

2.3.1 INTERNAL REGULATOR MODE

A low-ESR (< 1 Ohm) capacitor is required on the VCAP/VCORE pin, which is used to stabilize the internal voltage regulator output. The VCAP/VCORE pin must not be connected to VDD, and must have a CEFC capacitor, with at least a 6V rating, connected to ground. The type can be ceramic or tantalum. Refer to **Section 29.0 "Electrical Characteristics"** for additional information on CEFC specifications. This mode is enabled by connecting the ENVREG pin to VDD.

2.3.2 EXTERNAL REGULATOR MODE

In this mode the core voltage is supplied externally through the VCORE/VCAP pin. A low-ESR capacitor of 10 µF is recommended on the VCAP/VCORE pin. This mode is enabled by grounding the ENVREG pin.

The placement of this capacitor should be close to the VCAP/VCORE. It is recommended that the trace length not exceed one-quarter inch (6 mm). Refer to **Section 26.3 "On-Chip Voltage Regulator"** for details.

2.4 Master Clear ($\overline{\text{MCLR}}$) Pin

The $\overline{\text{MCLR}}$ pin provides for two specific device functions:

- Device Reset
- Device Programming and Debugging

Pulling The $\overline{\text{MCLR}}$ pin low generates a device reset. Figure 2-2 illustrates a typical MCLR circuit. During device programming and debugging, the resistance and capacitance that can be added to the pin must be considered. Device programmers and debuggers drive the $\overline{\text{MCLR}}$ pin. Consequently, specific voltage levels (VIH and VIL) and fast signal transitions must not be adversely affected. Therefore, specific values of R and C will need to be adjusted based on the application and PCB requirements.

For example, as illustrated in Figure 2-2, it is recommended that the capacitor C, be isolated from the $\overline{\text{MCLR}}$ pin during programming and debugging operations.

Place the components shown in Figure 2-2 within one-quarter inch (6 mm) from the $\overline{\text{MCLR}}$ pin.

FIGURE 2-2: EXAMPLE OF $\overline{\text{MCLR}}$ PIN CONNECTIONS

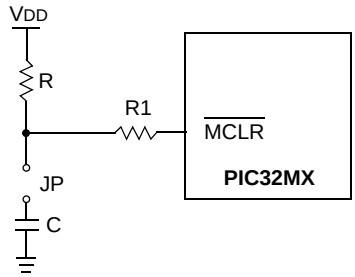

Note 1: R ≤10 kΩ is recommended. A suggested starting value is 10 kΩ Ensure that the $\overline{\text{MCLR}}$ pin VIH and VIL specifications are met.

2: R1 ≤ 470Ω will limit any current flowing into $\overline{\text{MCLR}}$ from the external capacitor C, in the event of $\overline{\text{MCLR}}$ pin breakdown, due to Electrostatic Discharge (ESD) or Electrical Overstress (EOS). Ensure that the $\overline{\text{MCLR}}$ pin VIH and VIL specifications are met.

3: The capacitor can be sized to prevent unintentional resets from brief glitches or to extend the device reset period during POR.

© 2011 Microchip Technology Inc.

2.5 ICSP Pins

The PGECx and PGEDx pins are used for In-Circuit Serial Programming™ (ICSP™) and debugging purposes. It is recommended to keep the trace length between the ICSP connector and the ICSP pins on the device as short as possible. If the ICSP connector is expected to experience an ESD event, a series resistor is recommended, with the value in the range of a few tens of Ohms, not to exceed 100 Ohms.

Pull-up resistors, series diodes and capacitors on the PGECx and PGEDx pins are not recommended as they will interfere with the programmer/debugger communications to the device. If such discrete components are an application requirement, they should be removed from the circuit during programming and debugging. Alternately, refer to the AC/DC characteristics and timing requirements information in the respective device Flash programming specification for information on capacitive loading limits and pin input voltage high (V_{IH}) and input low (V_{IL}) requirements.

Ensure that the "Communication Channel Select" (i.e., PGECx/PGEDx pins) programmed into the device matches the physical connections for the ICSP to MPLAB® ICD 2, MPLAB ICD 3 or MPLAB REAL ICE™.

For more information on ICD 2, ICD 3 and REAL ICE connection requirements, refer to the following documents that are available on the Microchip web site.

- *"MPLAB® ICD 2 In-Circuit Debugger User's Guide"* DS51331
- *"Using MPLAB® ICD 2"* (poster) DS51265
- *"MPLAB® ICD 2 Design Advisory"* DS51566
- *"Using MPLAB® ICD 3"* (poster) DS51765
- *"MPLAB® ICD 3 Design Advisory"* DS51764
- *"MPLAB® REAL ICE™ In-Circuit Debugger User's Guide"* DS51616
- *"Using MPLAB® REAL ICE™"* (poster) DS51749

2.6 JTAG

The TMS, TDO, TDI and TCK pins are used for testing and debugging according to the Joint Test Action Group (JTAG) standard. It is recommended to keep the trace length between the JTAG connector and the JTAG pins on the device as short as possible. If the JTAG connector is expected to experience an ESD event, a series resistor is recommended, with the value in the range of a few tens of Ohms, not to exceed 100 Ohms.

Pull-up resistors, series diodes and capacitors on the TMS, TDO, TDI and TCK pins are not recommended as they will interfere with the programmer/debugger communications to the device. If such discrete components are an application requirement, they should be removed from the circuit during programming and debugging. Alternately, refer to the AC/DC characteristics and timing requirements information in the respective device Flash programming specification for information on capacitive loading limits and pin input voltage high (V_{IH}) and input low (V_{IL}) requirements.

2.7 Trace

The trace pins can be connected to a hardware-trace-enabled programmer to provide a compress real time instruction trace. When used for trace the TRD3, TRD2, TRD1, TRD0 and TRCLK pins should be dedicated for this use. The trace hardware requires a 22 Ohm series resistor between the trace pins and the trace connector.

2.8 External Oscillator Pins

Many MCUs have options for at least two oscillators: a high-frequency primary oscillator and a low-frequency secondary oscillator (refer to **Section 8.0 "Oscillator Configuration"** for details).

The oscillator circuit should be placed on the same side of the board as the device. Also, place the oscillator circuit close to the respective oscillator pins, not exceeding one-half inch (12 mm) distance between them. The load capacitors should be placed next to the oscillator itself, on the same side of the board. Use a grounded copper pour around the oscillator circuit to isolate them from surrounding circuits. The grounded copper pour should be routed directly to the MCU ground. Do not run any signal traces or power traces inside the ground pour. Also, if using a two-sided board, avoid any traces on the other side of the board where the crystal is placed. A suggested layout is illustrated in Figure 2-3.

FIGURE 2-3: SUGGESTED PLACEMENT OF THE OSCILLATOR CIRCUIT

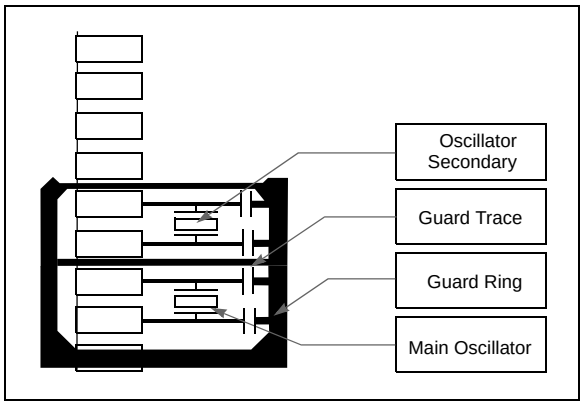

TABLE 4-13: ADC REGISTERS MAP (CONTINUED)

Virtual Address (BF80_#)	Register Name	Bit Range	Bits																All Resets
			31/15	30/14	29/13	28/12	27/11	26/10	25/9	24/8	23/7	22/6	21/5	20/4	19/3	18/2	17/1	16/0	
9110	ADC1BUFA	31:16	ADC Result Word A (ADC1BUFA<31:0>)																0000
		15:0																	0000
9120	ADC1BUFB	31:16	ADC Result Word B (ADC1BUFB<31:0>)																0000
		15:0																	0000
9130	ADC1BUFC	31:16	ADC Result Word C (ADC1BUFC<31:0>)																0000
		15:0																	0000
9140	ADC1BUFD	31:16	ADC Result Word D (ADC1BUFD<31:0>)																0000
		15:0																	0000
9150	ADC1BUFE	31:16	ADC Result Word E (ADC1BUFE<31:0>)																0000
		15:0																	0000
9160	ADC1BUFF	31:16	ADC Result Word F (ADC1BUFF<31:0>)																0000
		15:0																	0000

Legend: x = unknown value on Reset, — = unimplemented, read as '0'. Reset values are shown in hexadecimal.

Note 1: This register has corresponding CLR, SET and INV registers at its virtual address, plus an offset of 0x4, 0x8 and 0xC, respectively. See **Section 12.1.1 "CLR, SET and INV Registers"** for more information.

© 2011 Microchip Technology Inc.

TABLE 4-21: PORTA REGISTERS MAP FOR PIC32MX320F128L, PIC32MX340F128L, PIC32MX360F256L, PIC32MX360F512L, PIC32MX440F128L, PIC32MX460F256L AND PIC32MX460F512L DEVICES ONLY(1)

Virtual Address (BF88_#)	Register Name	Bit Range	Bits																All Resets
			31/15	30/14	29/13	28/12	27/11	26/10	25/9	24/8	23/7	22/6	21/5	20/4	19/3	18/2	17/1	16/0	
6000	TRISA	31:16	—	—	—	—	—	—	—	—	—	—	—	—	—	—	—	—	0000
		15:0	TRISA15	TRISA14	—	—	—	TRISA10	TRISA9	—	TRISA7	TRISA6	TRISA5	TRISA4	TRISA3	TRISA2	TRISA1	TRISA0	C6FF
6010	PORTA	31:16	—	—	—	—	—	—	—	—	—	—	—	—	—	—	—	—	0000
		15:0	RA15	RA14	—	—	—	RA10	RA9	—	RA7	RA6	RA5	RA4	RA3	RA2	RA1	RA0	xxxx
6020	LATA	31:16	—	—	—	—	—	—	—	—	—	—	—	—	—	—	—	—	0000
		15:0	LATA15	LATA14	—	—	—	LATA10	LATA9	—	LATA7	LATA6	LATA5	LATA4	LATA3	LATA2	LATA1	LATA0	xxxx
6030	ODCA	31:16	—	—	—	—	—	—	—	—	—	—	—	—	—	—	—	—	0000
		15:0	ODCA15	ODCA14	—	—	—	ODCA10	ODCA9	—	ODCA7	ODCA6	ODCA5	ODCA4	ODCA3	ODCA2	ODCA1	ODCA0	0000

Legend: x = unknown value on Reset, — = unimplemented, read as '0'. Reset values are shown in hexadecimal.

Note 1: All registers in this table have corresponding CLR, SET and INV registers at their virtual addresses, plus offsets of 0x4, 0x8 and 0xC, respectively. See **Section 12.1.1 "CLR, SET and INV Registers"** for more information.

TABLE 4-22: PORTB REGISTERS MAP(1)

Virtual Address (BF88_#)	Register Name	Bit Range	Bits																All Resets
			31/15	30/14	29/13	28/12	27/11	26/10	25/9	24/8	23/7	22/6	21/5	20/4	19/3	18/2	17/1	16/0	
6040	TRISB	31:16	—	—	—	—	—	—	—	—	—	—	—	—	—	—	—	—	0000
		15:0	TRISB15	TRISB14	TRISB13	TRISB12	TRISB11	TRISB10	TRISB9	TRISB8	TRISB7	TRISB6	TRISB5	TRISB4	TRISB3	TRISB2	TRISB1	TRISB0	FFFF
6050	PORTB	31:16	—	—	—	—	—	—	—	—	—	—	—	—	—	—	—	—	0000
		15:0	RB15	RB14	RB13	RB12	RB11	RB10	RB9	RB8	RB7	RB6	RB5	RB4	RB3	RB2	RB1	RB0	xxxx
6060	LATB	31:16	—	—	—	—	—	—	—	—	—	—	—	—	—	—	—	—	0000
		15:0	LATB15	LATB14	LATB13	LATB12	LATB11	LATB10	LATB9	LATB8	LATB7	LATB6	LATB5	LATB4	LATB3	LATB2	LATB1	LATB0	xxxx
6070	ODCB	31:16	—	—	—	—	—	—	—	—	—	—	—	—	—	—	—	—	0000
		15:0	ODCB15	ODCB14	ODCB13	ODCB12	ODCB11	ODCB10	ODCB9	ODCB8	ODCB7	ODCB6	ODCB5	ODCB4	ODCB3	ODCB2	ODCB1	ODCB0	0000

Legend: x = unknown value on Reset, — = unimplemented, read as '0'. Reset values are shown in hexadecimal.

Note 1: All registers in this table have corresponding CLR, SET and INV registers at their virtual addresses, plus offsets of 0x4, 0x8 and 0xC, respectively. See **Section 12.1.1 "CLR, SET and INV Registers"** for more information.

© 2011 Microchip Technology Inc.

TABLE 4-31: PORTF REGISTERS MAP FOR PIC32MX320F032H, PIC32MX320F064H, PIC32MX320F128H, PIC32MX340F128H, PIC32MX340F256H AND PIC32MX340F512H DEVICES ONLY(1)

Virtual Address (BF88_#)	Register Name	Bit Range	Bits																All Resets
			31/15	30/14	29/13	28/12	27/11	26/10	25/9	24/8	23/7	22/6	21/5	20/4	19/3	18/2	17/1	16/0	
6140	TRISF	31:16	—	—	—	—	—	—	—	—	—	—	—	—	—	—	—	—	0000
		15:0	—	—	—	—	—	—	—	—	—	TRISF6	TRISF5	TRISF4	TRISF3	TRISF2	TRISF1	TRISF0	07FF
6150	PORTF	31:16	—	—	—	—	—	—	—	—	—	—	—	—	—	—	—	—	0000
		15:0	—	—	—	—	—	—	—	—	—	RF6	RF5	RF4	RF3	RF2	RF1	RF0	xxxx
6160	LATF	31:16	—	—	—	—	—	—	—	—	—	—	—	—	—	—	—	—	0000
		15:0	—	—	—	—	—	—	—	—	—	LATF6	LATF5	LATF4	LATF3	LATF2	LATF1	LATF0	xxxx
6170	ODCF	31:16	—	—	—	—	—	—	—	—	—	—	—	—	—	—	—	—	0000
		15:0	—	—	—	—	—	—	—	—	—	ODCF6	ODCF5	ODCF4	ODCF3	ODCF2	ODCF1	ODCF0	0000

Legend: x = unknown value on Reset, — = unimplemented, read as '0'. Reset values are shown in hexadecimal.

Note 1: All registers in this table have corresponding CLR, SET and INV registers at their virtual addresses, plus offsets of 0x4, 0x8 and 0xC, respectively. See **Section 12.1.1 "CLR, SET and INV Registers"** for more information.

TABLE 4-32: PORTF REGISTERS MAP FOR PIC32MX420F032H, PIC32MX440F128H AND PIC2MX440F256H DEVICES ONLY(1)

Virtual Address (BF88_#)	Register Name	Bit Range	Bits																All Resets
			31/15	30/14	29/13	28/12	27/11	26/10	25/9	24/8	23/7	22/6	21/5	20/4	19/3	18/2	17/1	16/0	
6140	TRISF	31:16	—	—	—	—	—	—	—	—	—	—	—	—	—	—	—	—	0000
		15:0	—	—	—	—	—	—	—	—	—	—	TRISF5	TRISF4	TRISF3	TRISF2	TRISF1	TRISF0	03FF
6150	PORTF	31:16	—	—	—	—	—	—	—	—	—	—	—	—	—	—	—	—	0000
		15:0	—	—	—	—	—	—	—	—	—	—	RF5	RF4	RF3	RF2	RF1	RF0	xxxx
6160	LATF	31:16	—	—	—	—	—	—	—	—	—	—	—	—	—	—	—	—	0000
		15:0	—	—	—	—	—	—	—	—	—	—	LATF5	LATF4	LATF3	LATF2	LATF1	LATF0	xxxx
6170	ODCF	31:16	—	—	—	—	—	—	—	—	—	—	—	—	—	—	—	—	0000
		15:0	—	—	—	—	—	—	—	—	—	—	ODCF5	ODCF4	ODCF3	ODCF2	ODCF1	ODCF0	0000

Legend: x = unknown value on Reset, — = unimplemented, read as '0'. Reset values are shown in hexadecimal.

Note 1: All registers in this table have corresponding CLR, SET and INV registers at their virtual addresses, plus offsets of 0x4, 0x8 and 0xC, respectively. See **Section 12.1.1 "CLR, SET and INV Registers"** for more information.

© 2011 Microchip Technology Inc.

TABLE 4-43: USB REGISTERS MAP(1)

Virtual Address (BF88_#)	Register Name	Bit Range	Bits 31/15	30/14	29/13	28/12	27/11	26/10	25/9	24/8	23/7	22/6	21/5	20/4	19/3	18/2	17/1	16/0	All Resets
5040	U1OTGIR(2)	31:16	—	—	—	—	—	—	—	—	—	—	—	—	—	—	—	—	
		15:0	—	—	—	—	—	—	—	—	IDIF	T1MSECIF	LSTATEIF	ACTVIF	SESVDIF	SESENDIF	—	VBUSVDIF	0000
5050	U1OTGIE	31:16	—	—	—	—	—	—	—	—	—	—	—	—	—	—	—	—	0000
		15:0	—	—	—	—	—	—	—	—	IDIE	T1MSECIE	LSTATEIE	ACTVIE	SESVDIE	SESENDIE	—	VBUSVDIE	0000
5060	U1OTGSTAT(3)	31:16	—	—	—	—	—	—	—	—	—	—	—	—	—	—	—	—	0000
		15:0	—	—	—	—	—	—	—	—	ID	—	LSTATE	—	SESVD	SESEND	—	VBUSVD	0000
5070	U1OTGCON	31:16	—	—	—	—	—	—	—	—	—	—	—	—	—	—	—	—	0000
		15:0	—	—	—	—	—	—	—	—	DPPULUP	DMPULUP	DPPULDWN	DMPULDWN	VBUSON	OTGEN	VBUSCHG	VBUSDIS	0000
5080	U1PWRC	31:16	—	—	—	—	—	—	—	—	—	—	—	—	—	—	—	—	0000
		15:0	—	—	—	—	—	—	—	—	UACTPND(4)	—	—	USLPGRD	—	—	USUSPEND	USBPWR	0000
5200	U1IR(2)	31:16	—	—	—	—	—	—	—	—	—	—	—	—	—	—	—	—	0000
		15:0	—	—	—	—	—	—	—	—	STALLIF	ATTACHIF	RESUMEIF	IDLEIF	TRNIF	SOFIF	UERRIF	URSTIF	0000
																		DETACHIF	0000
5210	U1IE	31:16	—	—	—	—	—	—	—	—	—	—	—	—	—	—	—	—	0000
		15:0	—	—	—	—	—	—	—	—	STALLIE	ATTACHIE	RESUMEIE	IDLEIE	TRNIE	SOFIE	UERRIE	URSTIE	0000
																		DETACHIE	0000
5220	U1EIR	31:16	—	—	—	—	—	—	—	—	—	—	—	—	—	—	—	—	0000
		15:0	—	—	—	—	—	—	—	—	BTSEF	BMXEF	DMAEF	BTOEF	DFN8EF	CRC16EF	CRC5EF	PIDEF	0000
																	EOFEF		0000
5230	U1EIE	31:16	—	—	—	—	—	—	—	—	—	—	—	—	—	—	—	—	0000
		15:0	—	—	—	—	—	—	—	—	BTSEE	BMXEE	DMAEE	BTOEE	DFN8EE	CRC16EE	CRC5EE	PIDEE	0000
																	EOFEE		0000
5240	U1STAT(3)	31:16	—	—	—	—	—	—	—	—	—	—	—	—	—	—	—	—	0000
		15:0	—	—	—	—	—	—	—	—	ENDPT<3:0>(4)				DIR	PPBI	—	—	0000
5250	U1CON	31:16	—	—	—	—	—	—	—	—	—	—	—	—	—	—	—	—	0000
		15:0	—	—	—	—	—	—	—	—	JSTATE(4)	SE0(4)	PKTDIS	USBRST	HOSTEN	RESUME	PPBRST	USBEN	0000
													TOKBUSY					SOFEN	0000
5260	U1ADDR	31:16	—	—	—	—	—	—	—	—	—	—	—	—	—	—	—	—	0000
		15:0	—	—	—	—	—	—	—	—	LSPDEN	DEVADDR<6:0>							0000
5270	U1BDTP1	31:16	—	—	—	—	—	—	—	—	—	—	—	—	—	—	—	—	0000
		15:0	—	—	—	—	—	—	—	—	BDTPTRL<7:1>							—	0000

Legend: x = unknown value on Reset, — = unimplemented, read as '0'. Reset values are shown in hexadecimal.

Note 1: Except where noted, all registers in this table have corresponding CLR, SET and INV registers at their virtual addresses, plus offsets of 0x4, 0x8 and 0xC, respectively. See **Section 12.1.1 "CLR, SET and INV Registers"** for more information.

2: This register does not have associated CLR, SET, and INV registers.

3: All bits in this register are read-only; therefore, CLR, SET, and INV registers are not supported.

4: The reset value for this bit is undefined.

© 2011 Microchip Technology Inc.

19.0 UNIVERSAL ASYNCHRONOUS RECEIVER TRANSMITTER (UART)

Note 1: This data sheet summarizes the features of the PIC32MX3XX/4XX family of devices. It is not intended to be a comprehensive reference source. To complement the information in this data sheet, refer to **Section 21. "Universal Asynchronous Receiver Transmitter (UART)"** (DS61107) of the *"PIC32 Family Reference Manual"***,** which is available from the Microchip web site (www.microchip.com/PIC32).

2: Some registers and associated bits described in this section may not be available on all devices. Refer to **Section 4.0 "Memory Organization"** in this data sheet for device-specific register and bit information.

The UART module is one of the serial I/O modules available in PIC32MX3XX/4XX family devices. The UART is a full-duplex, asynchronous communication channel that communicates with peripheral devices and personal computers through protocols such as RS-232, RS-485, LIN 1.2 and IrDA®. The module also supports the hardware flow control option, with $\overline{\text{UxCTS}}$ and $\overline{\text{UxRTS}}$ pins, and also includes an IrDA encoder and decoder.

The primary features of the UART module are:

- Full-duplex, 8-bit or 9-bit data transmission
- Even, odd or no parity options (for 8-bit data)
- One or two Stop bits
- Hardware auto-baud feature
- Hardware flow control option
- Fully integrated Baud Rate Generator (BRG) with 16-bit prescaler
- Baud rates ranging from 76 bps to 20 Mbps at 80 MHz
- 4-level-deep First-In-First-Out (FIFO) Transmit Data Buffer
- 4-level-deep FIFO Receive Data Buffer
- Parity, framing and buffer overrun error detection
- Support for interrupt only on address detect (9th bit = 1)
- Separate transmit and receive interrupts
- Loopback mode for diagnostic support
- LIN protocol support
- IrDA encoder and decoder with 16x baud clock output for external IrDA encoder/decoder support

Figure 19-1 illustrates a simplified block diagram of the UART.

FIGURE 19-1: UART SIMPLIFIED BLOCK DIAGRAM

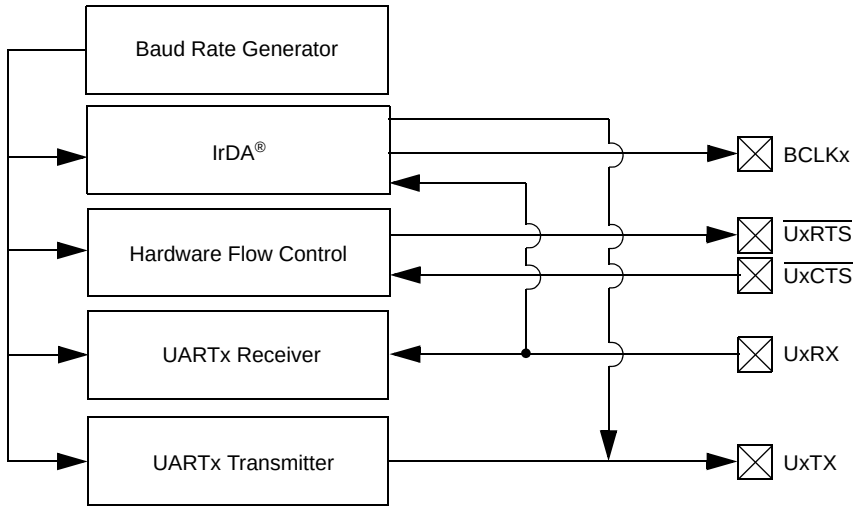

FIGURE 19-2: TRANSMISSION (8-BIT OR 9-BIT DATA)

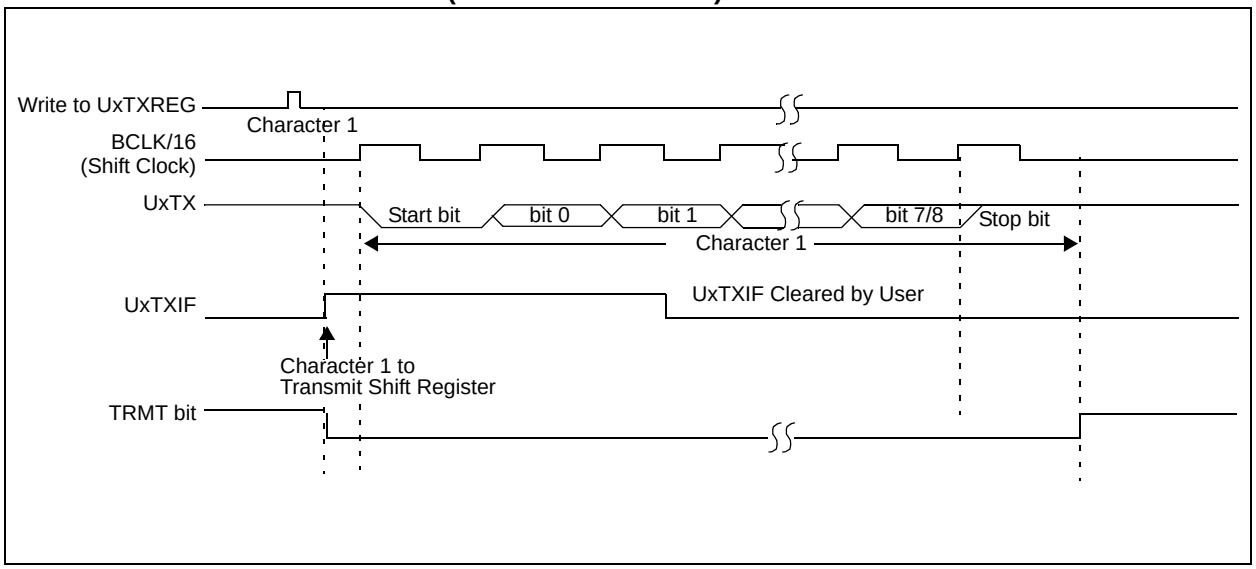

FIGURE 19-3: TWO CONSECUTIVE TRANSMISSIONS

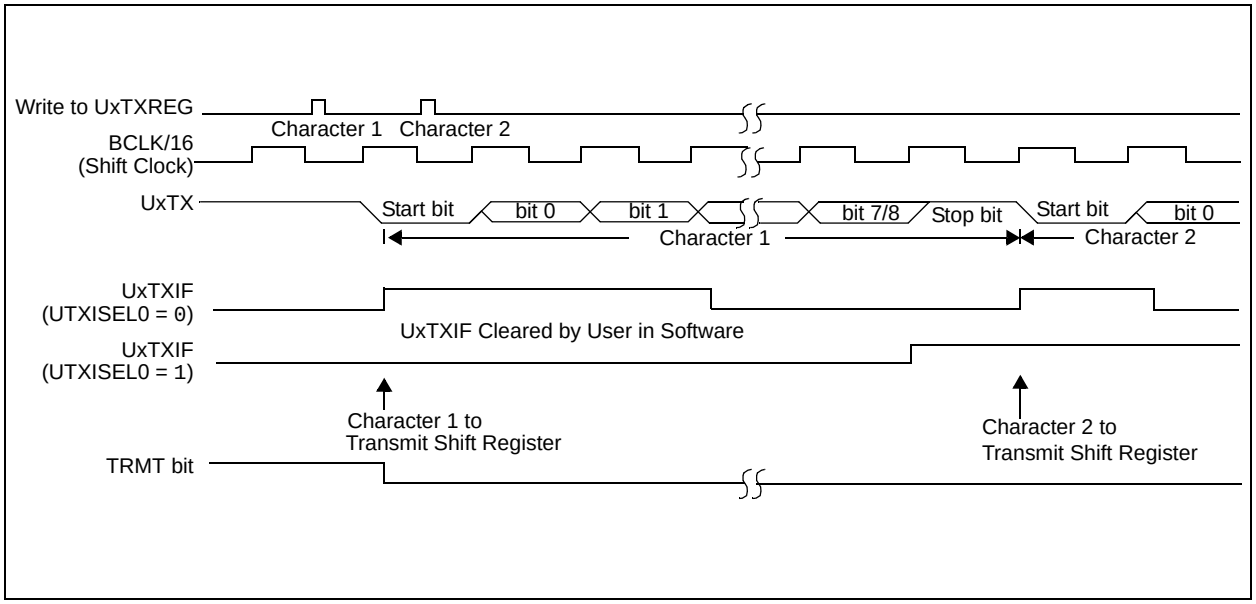

© 2011 Microchip Technology Inc.

NOTES:

© 2011 Microchip Technology Inc.

TABLE 27-1: MIPS32® INSTRUCTION SET (CONTINUED)

Instruction	Description	Function

BLEZL	Branch on Less Than or Equal to Zero Likely(1)	if Rs[31] || Rs == 0
		  PC += (int)offset
		else
		  Ignore Next Instruction

BLTZ	Branch on Less Than Zero	if Rs[31] PC += (int)offset
BLTZAL	Branch on Less Than Zero and Link	GPR[31] = PC + 8 if Rs[31] PC += (int)offset

BLTZALL	Branch on Less Than Zero and Link Likely(1)	GPR[31] = PC + 8
		if Rs[31]
		  PC += (int)offset
		else
		  Ignore Next Instruction

BLTZL	Branch on Less Than Zero Likely(1)	if Rs[31]
		  PC += (int)offset
		else
		  Ignore Next Instruction

BNE	Branch on Not Equal	if Rs != Rt PC += (int)offset

BNEL	Branch on Not Equal Likely(1)	if Rs != Rt
		  PC += (int)offset
		else
		  Ignore Next Instruction

BREAK	Breakpoint	Break Exception
CLO	Count Leading Ones	Rd = NumLeadingOnes(Rs)
CLZ	Count Leading Zeroes	Rd = NumLeadingZeroes(Rs)
DERET	Return from Debug Exception	PC = DEPC Exit Debug Mode
DI	Atomically Disable Interrupts	Rt = Status; $Status_{IE}$ = 0
DIV	Divide	LO = (int)Rs / (int)Rt HI = (int)Rs % (int)Rt
DIVU	Unsigned Divide	LO = (uns)Rs / (uns)Rt HI = (uns)Rs % (uns)Rt
EHB	Execution Hazard Barrier	Stop instruction execution until execution hazards are cleared
EI	Atomically Enable Interrupts	Rt = Status; $Status_{IE}$ = 1

ERET	Return from Exception	if $Status_{ERL}$
		  PC = ErrorEPC
		else
		  PC = EPC
		  $Status_{EXL}$ = 0
		$Status_{ERL}$ = 0
		LL = 0

EXT	Extract Bit Field	Rt = ExtractField(Rs, pos, size)
INS	Insert Bit Field	Rt = InsertField(Rs, Rt, pos, size)
J	Unconditional Jump	PC = PC[31:28] || offset<<2

Note 1: This instruction is deprecated and should not be used.

© 2011 Microchip Technology Inc.

28.11 PICkit 2 Development Programmer/Debugger and PICkit 2 Debug Express

The PICkit™ 2 Development Programmer/Debugger is a low-cost development tool with an easy to use interface for programming and debugging Microchip's Flash families of microcontrollers. The full featured Windows® programming interface supports baseline (PIC10F, PIC12F5xx, PIC16F5xx), midrange (PIC12F6xx, PIC16F), PIC18F, PIC24, dsPIC30, dsPIC33, and PIC32 families of 8-bit, 16-bit, and 32-bit microcontrollers, and many Microchip Serial EEPROM products. With Microchip's powerful MPLAB Integrated Development Environment (IDE) the PICkit™ 2 enables in-circuit debugging on most PIC® microcontrollers. In-Circuit-Debugging runs, halts and single steps the program while the PIC microcontroller is embedded in the application. When halted at a breakpoint, the file registers can be examined and modified.

The PICkit 2 Debug Express include the PICkit 2, demo board and microcontroller, hookup cables and CDROM with user's guide, lessons, tutorial, compiler and MPLAB IDE software.

28.12 MPLAB PM3 Device Programmer

The MPLAB PM3 Device Programmer is a universal, CE compliant device programmer with programmable voltage verification at V_{DDMIN} and V_{DDMAX} for maximum reliability. It features a large LCD display (128 x 64) for menus and error messages and a modular, detachable socket assembly to support various package types. The ICSP™ cable assembly is included as a standard item. In Stand-Alone mode, the MPLAB PM3 Device Programmer can read, verify and program PIC devices without a PC connection. It can also set code protection in this mode. The MPLAB PM3 connects to the host PC via an RS-232 or USB cable. The MPLAB PM3 has high-speed communications and optimized algorithms for quick programming of large memory devices and incorporates an MMC card for file storage and data applications.

28.13 Demonstration/Development Boards, Evaluation Kits, and Starter Kits

A wide variety of demonstration, development and evaluation boards for various PIC MCUs and dsPIC DSCs allows quick application development on fully functional systems. Most boards include prototyping areas for adding custom circuitry and provide application firmware and source code for examination and modification.

The boards support a variety of features, including LEDs, temperature sensors, switches, speakers, RS-232 interfaces, LCD displays, potentiometers and additional EEPROM memory.

The demonstration and development boards can be used in teaching environments, for prototyping custom circuits and for learning about various microcontroller applications.

In addition to the PICDEM™ and dsPICDEM™ demonstration/development board series of circuits, Microchip has a line of evaluation kits and demonstration software for analog filter design, KEELOQ® security ICs, CAN, IrDA®, PowerSmart battery management, SEEVAL® evaluation system, Sigma-Delta ADC, flow rate sensing, plus many more.

Also available are starter kits that contain everything needed to experience the specified device. This usually includes a single application and debug capability, all on one board.

Check the Microchip web page (www.microchip.com) for the complete list of demonstration, development and evaluation kits.

© 2011 Microchip Technology Inc.

FIGURE 29-10: SPIx MODULE MASTER MODE (CKE = 0) TIMING CHARACTERISTICS

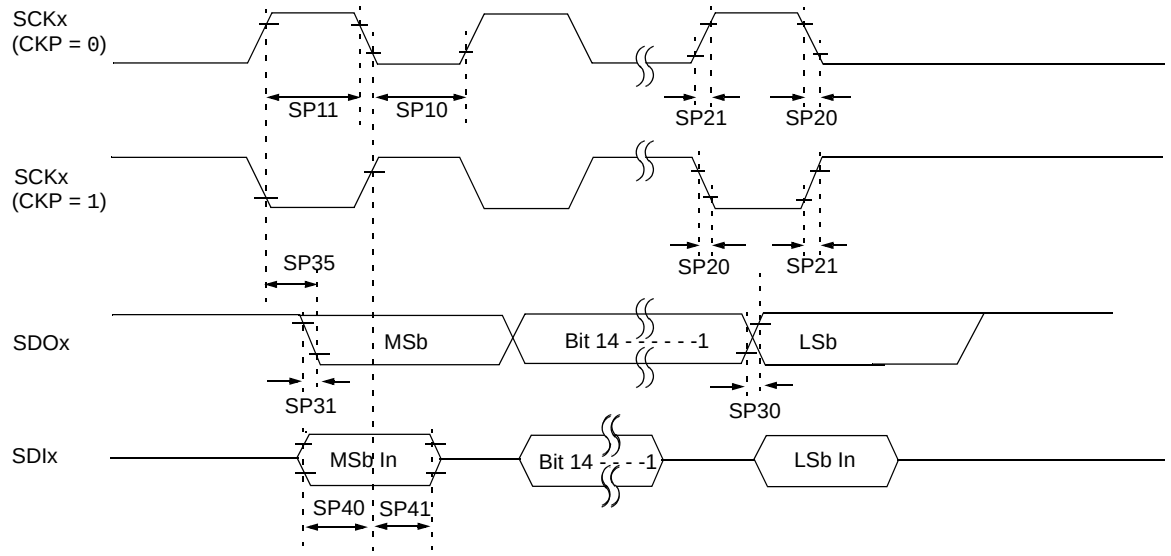

Note: Refer to Figure 29-1 for load conditions.

TABLE 29-28: SPIx MASTER MODE (CKE = 0) TIMING REQUIREMENTS

AC CHARACTERISTICS			Standard Operating Conditions: 2.3V to 3.6V (unless otherwise stated) Operating temperature -40°C ≤TA ≤+85°C for Industrial -40°C ≤TA ≤+105°C for V-Temp				
Param. No.	**Symbol**	**Characteristics(1)**	**Min.**	**Typical(2)**	**Max.**	**Units**	**Conditions**
SP10	TSCL	SCKx Output Low Time(3)	TSCK/2	—	—	ns	—
SP11	TSCH	SCKx Output High Time(3)	TSCK/2	—	—	ns	—
SP20	TSCF	SCKx Output Fall Time(4)	—	—	—	ns	See parameter DO32
SP21	TSCR	SCKx Output Rise Time(4)	—	—	—	ns	See parameter DO31
SP30	TDOF	SDOx Data Output Fall Time(4)	—	—	—	ns	See parameter DO32
SP31	TDOR	SDOx Data Output Rise Time(4)	—	—	—	ns	See parameter DO31
SP35	TSCH2DOV, TSCL2DOV	SDOx Data Output Valid after SCKx Edge	—	—	15	ns	VDD > 2.7V
			—	—	20	ns	VDD < 2.7V
SP40	TDIV2SCH, TDIV2SCL	Setup Time of SDIx Data Input to SCKx Edge	10	—	—	ns	—
SP41	TSCH2DIL, TSCL2DIL	Hold Time of SDIx Data Input to SCKx Edge	10	—	—	ns	—

Note 1: These parameters are characterized, but not tested in manufacturing.

2: Data in “Typical” column is at 3.3V, 25°C unless otherwise stated. Parameters are for design guidance only and are not tested.

3: The minimum clock period for SCKx is 40 ns. Therefore, the clock generated in Master mode must not violate this specification.

4: Assumes 50 pF load on all SPIx pins.

FIGURE 29-14: I2Cx BUS START/STOP BITS TIMING CHARACTERISTICS (MASTER MODE)

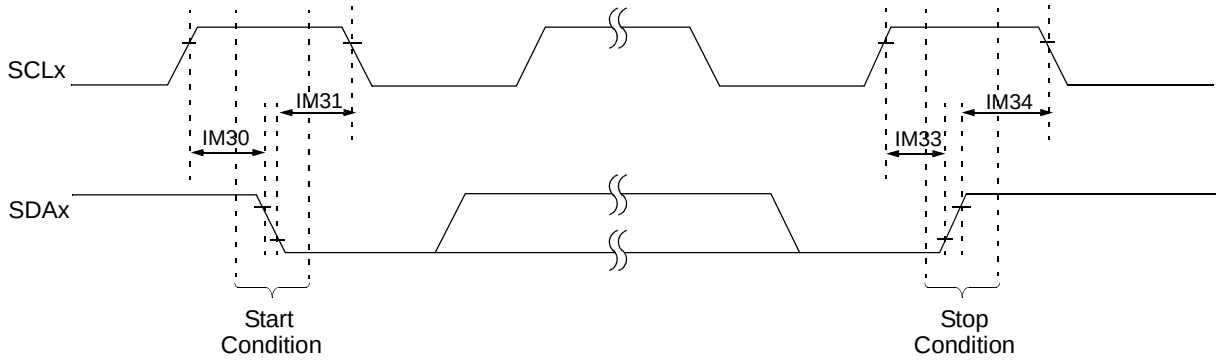

Note: Refer to Figure 29-1 for load conditions.

FIGURE 29-15: I2Cx BUS DATA TIMING CHARACTERISTICS (MASTER MODE)

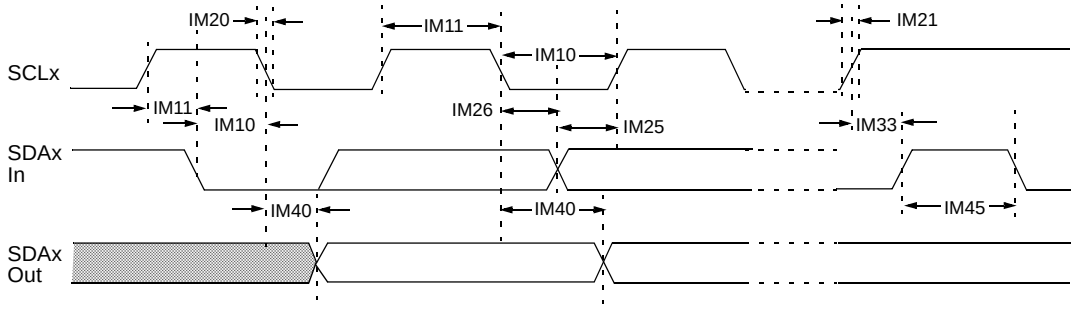

Note: Refer to Figure 29-1 for load conditions.

Revision H (May 2011)

The revision includes the following global update:

- All references to VDDCORE/VCAP have been changed to: VCORE/VCAP
- Added references to the new V-Temp temperature range: -40ºC to +105ºC

This revision also includes minor typographical and formatting changes throughout the data sheet text. Major updates are referenced by their respective section in the following table.

TABLE A-3: MAJOR SECTION UPDATES

Section Name	Update Description
Section 1.0 “Device Overview”	Updated the VBUS description in **Table 1-1: “Pinout I/O Descriptions”**.
Section 4.0 “Memory Organization”	Added Note 2 and changed the RIPL<2:0> bits to SRIPL<2:0> in the Interrupt Register Map tables (see Table 4-2 through Table 4-6. Added Note 2 to the Timer1-5 Register Map (see Table 4-7). Updated the All Resets value for I2C1CON<15:0> and I2C2CON<15:0> in the I2C1 and I2C2 Register Map (see Table 4-10). Updated the All Resets value for SPI1STAT<15:0> and SPI2STAT<15:0> in the SPI1 and SPI2 Register Map (see Table 4-12). Updated the All Resets value for CM1CON<15:0> and CM2CON<15:0> in the Comparator Register Map (see Table 4-17). Renamed the RCDIV<2:0> bits to FRCDIV<2:0> and the LOCK bit to SLOCK in the OSCCON register, and added Note 3 and the SYSKEYregister to the System Control Registers Map (see Table 4-20). Updated the All Resets value for the PMSTAT register in the Parallel Master Port Register Map (see Table 4-37). Updated the All Resets value for CHECON<15:0> and CHETAG<15:0> in the Prefetch Register Map (see Table 4-39). Renamed FUPLLEN, FUPLLIDIV, and FPLLMULT in the DEVCFG2 register to: UPLLEN, UPLLIDIV, and FPLLMUL, respectively in the Device Configuration Word Summary (see Table 4-41). Added Notes 1 through 4 to the USB Register Map (see Table 4-43).
Section 5.0 “Flash Program Memory”	Added a note on Flash LVD Delay and Example 5-1.
Section 8.0 “Oscillator Configuration”	Updated the PIC32MX3XX/4XX Family Clock Diagram (see Figure 8-1).
Section 11.0 “USB On-The-Go (OTG)”	Updated the PIC32MX3XX/4XX Family USB Interface Diagram (see Figure 11-1).
Section 16.0 “Output Compare”	Updated the Output Compare Module Block Diagram (see Figure 16-1).
Section 22.0 “10-bit Analog-to-Digital Converter (ADC)”	Updated the ADC Conversion Clock Period Block Diagram (see Figure 22-2).
Section 26.0 “Special Features”	Renamed FUPLLEN, FUPLLIDIV, and FPLLMULT in the DEVCFG2 register to: UPLLEN, UPLLIDIV, and FPLLMUL, respectively (see Register 26-3).

THE MICROCHIP WEB SITE

Microchip provides online support via our WWW site at www.microchip.com. This web site is used as a means to make files and information easily available to customers. Accessible by using your favorite Internet browser, the web site contains the following information:

- **Product Support** – Data sheets and errata, application notes and sample programs, design resources, user's guides and hardware support documents, latest software releases and archived software
- **General Technical Support** – Frequently Asked Questions (FAQs), technical support requests, online discussion groups, Microchip consultant program member listing
- **Business of Microchip** – Product selector and ordering guides, latest Microchip press releases, listing of seminars and events, listings of Microchip sales offices, distributors and factory representatives

CUSTOMER CHANGE NOTIFICATION SERVICE

Microchip's customer notification service helps keep customers current on Microchip products. Subscribers will receive e-mail notification whenever there are changes, updates, revisions or errata related to a specified product family or development tool of interest.

To register, access the Microchip web site at www.microchip.com. Under "Support", click on "Customer Change Notification" and follow the registration instructions.

CUSTOMER SUPPORT

Users of Microchip products can receive assistance through several channels:

- Distributor or Representative
- Local Sales Office
- Field Application Engineer (FAE)
- Technical Support
- Development Systems Information Line

Customers should contact their distributor, representative or field application engineer (FAE) for support. Local sales offices are also available to help customers. A listing of sales offices and locations is included in the back of this document.

Technical support is available through the web site at: http://microchip.com/support