Intel - EP2SGX60DF780C5N Datasheet

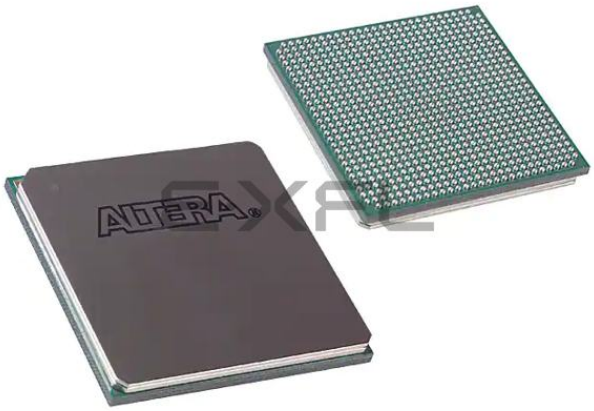

Welcome to E-XFL.COM

Understanding Embedded - FPGAs (Field Programmable Gate Array)

Embedded - FPGAs, or Field Programmable Gate Arrays, are advanced integrated circuits that offer unparalleled flexibility and performance for digital systems. Unlike traditional fixed-function logic devices, FPGAs can be programmed and reprogrammed to execute a wide array of logical operations, enabling customized functionality tailored to specific applications. This reprogrammability allows developers to iterate designs quickly and implement complex functions without the need for custom hardware.

Applications of Embedded - FPGAs

The versatility of Embedded - FPGAs makes them indispensable in numerous fields. In telecommunications.

Details	
Product Status	Obsolete
Number of LABs/CLBs	3022
Number of Logic Elements/Cells	60440
Total RAM Bits	2544192
Number of I/O	364
Number of Gates	-
Voltage - Supply	1.15V ~ 1.25V
Mounting Type	Surface Mount
Operating Temperature	0°C ~ 85°C (TJ)
Package / Case	780-BBGA
Supplier Device Package	780-FBGA (29x29)
Purchase URL	https://www.e-xfl.com/product-detail/intel/ep2sgx60df780c5n

Figure 2–21. 8B/10B Decoder

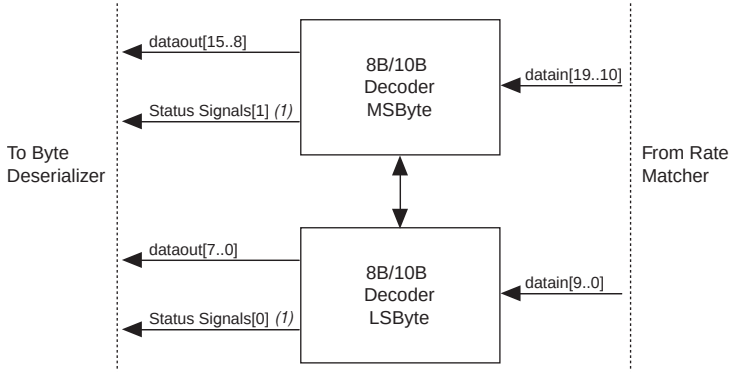

The 8B/10B decoder in single-width mode translates the 10-bit encoded data into the 8-bit equivalent data or control code. The 10-bit code received must be from the supported Dx.y or Kx.y list with the proper disparity or error flags asserted. All 8B/10B control signals, such as disparity error or control detect, are pipelined with the data and edge-aligned with the data. Figure 2–22 shows how the 10-bit symbol is decoded in the 8-bit data + 1-bit control indicator.

Figure 2–22. 8B/10B Decoder Conversion

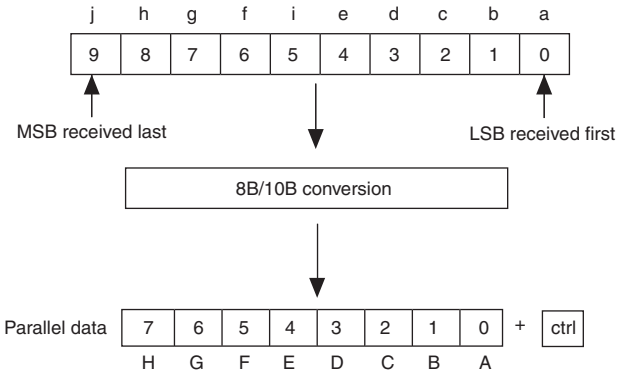

The 8B/10B decoder in double-width mode translates the 20-bit (2 × 10-bits) encoded code into the 16-bit (2 × 8-bits) equivalent data or control code. The 20-bit upper and lower symbols received must be from the supported Dx.y or Kx.y list with the proper disparity or error flags

Table 2–16. Reset Signal Map to Stratix II GX Blocks

Reset Signal	Transmitter Phase Compensation FIFO Module/ Byte Serializer	Transmitter 8B/10B Encoder	Transmitter Serializer	Transmitter Analog Circuits	Transmitter PLL	Transmitter XAUI State Machine	BIST Generators	Receiver Deserializer	Receiver Word Aligner	Receiver Deskew FIFO Module	Receiver Rate Matcher	Receiver 8B/10B Decoder	Receiver Phase Comp FIFO Module/ Byte Deserializer	Receiver PLL / CRU	Receiver XAUI State Machine	BIST Verifiers	Receiver Analog Circuits
rx_digitalreset									✓	✓	✓	✓	✓		✓	✓	
rx_analogreset								✓						✓			✓
tx_digitalreset	✓	✓				✓	✓										
gxb_powerdown	✓	✓	✓	✓	✓	✓	✓	✓	✓	✓	✓	✓	✓	✓	✓	✓	✓
gxb_enable	✓	✓	✓	✓	✓	✓	✓	✓	✓	✓	✓	✓	✓	✓	✓	✓	✓

Voltage Reference Capabilities

Stratix II GX transceivers provide voltage reference and bias circuitry. To set up internal bias for controlling the transmitter output driver voltage swings, as well as to provide voltage and current biasing for other analog circuitry, the device uses an internal bandgap voltage reference of 0.7 V. An external 2-KΩ resistor connected to ground generates a constant bias current (independent of power supply drift, process changes, or temperature variation). An on-chip resistor generates a tracking current that tracks on-chip resistor variation. These currents are mirrored and distributed to the analog circuitry in each channel.

For more information, refer to the *DC and Switching Characteristics* chapter in volume 1 of the *Stratix II GX Handbook*.

Table 2–20 shows the input and output data signal connections along with the address and control signal input connections to the row unit interfaces (L0 to L5 and R0 to R5).

Table 2–20. M-RAM Row Interface Unit Signals

Unit Interface Block	Input Signals	Output Signals
L0	datain_a[14..0] byteena_a[1..0]	dataout_a[11..0]
L1	datain_a[29..15] byteena_a[3..2]	dataout_a[23..12]
L2	datain_a[35..30] addressa[4..0] addr_ena_a clock_a clocken_a renwe_a aclr_a	dataout_a[35..24]
L3	addressa[15..5] datain_a[41..36]	dataout_a[47..36]
L4	datain_a[56..42] byteena_a[5..4]	dataout_a[59..48]
L5	datain_a[71..57] byteena_a[7..6]	dataout_a[71..60]
R0	datain_b[14..0] byteena_b[1..0]	dataout_b[11..0]
R1	datain_b[29..15] byteena_b[3..2]	dataout_b[23..12]
R2	datain_b[35..30] addressb[4..0] addr_ena_b clock_b clocken_b renwe_b aclr_b	dataout_b[35..24]
R3	addressb[15..5] datain_b[41..36]	dataout_b[47..36]
R4	datain_b[56..42] byteena_b[5..4]	dataout_b[59..48]
R5	datain_b[71..57] byteena_b[7..6]	dataout_b[71..60]

Refer to the *TriMatrix Embedded Memory Blocks in Stratix II & Stratix II GX Devices* chapter in volume 2 of the *Stratix II GX Device Handbook* for more information on TriMatrix memory.

Digital Signal Processing (DSP) Block

The most commonly used DSP functions are finite impulse response (FIR) filters, complex FIR filters, infinite impulse response (IIR) filters, fast Fourier transform (FFT) functions, direct cosine transform (DCT) functions, and correlators. All of these use the multiplier as the fundamental building block. Additionally, some applications need specialized operations such as multiply-add and multiply-accumulate operations. Stratix II GX devices provide DSP blocks to meet the arithmetic requirements of these functions.

Each Stratix II GX device has two to four columns of DSP blocks to efficiently implement DSP functions faster than ALM-based implementations. Stratix II GX devices have up to 24 DSP blocks per column (see Table 2–21). Each DSP block can be configured to support up to:

- Eight 9 × 9-bit multipliers
- Four 18 × 18-bit multipliers
- One 36 × 36-bit multiplier

As indicated, the Stratix II GX DSP block can support one 36 × 36-bit multiplier in a single DSP block, and is true for any combination of signed, unsigned, or mixed sign multiplications.

Figures 2–57 shows one of the columns with surrounding LAB rows.

Figure 2–57. DSP Blocks Arranged in Columns

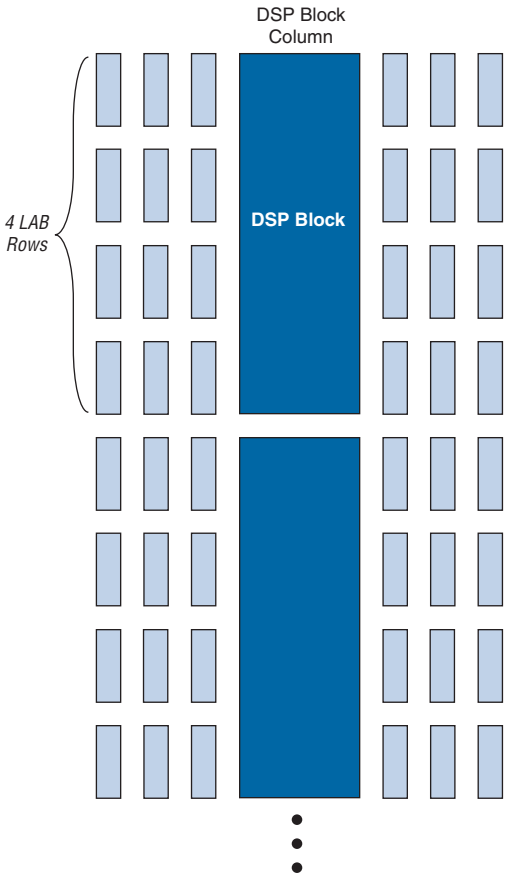

The DSP block is divided into four block units that interface with four LAB rows on the left and right. Each block unit can be considered one complete 18 × 18-bit multiplier with 36 inputs and 36 outputs. A local interconnect region is associated with each DSP block. Like a LAB, this interconnect region can be fed with 16 direct link interconnects from the LAB to the left or right of the DSP block in the same row. R4 and C4 routing resources can access the DSP block's local interconnect region. The outputs also work similarly to LAB outputs. Eighteen outputs from the DSP block can drive to the left LAB through direct link interconnects and 18 can drive to the right LAB through direct link interconnects. All 36 outputs can drive to R4 and C4 routing interconnects. Outputs can drive right- or left-column routing.

Figures 2–59 and 2–60 show the DSP block interfaces to LAB rows.

Figure 2–59. DSP Block Interconnect Interface

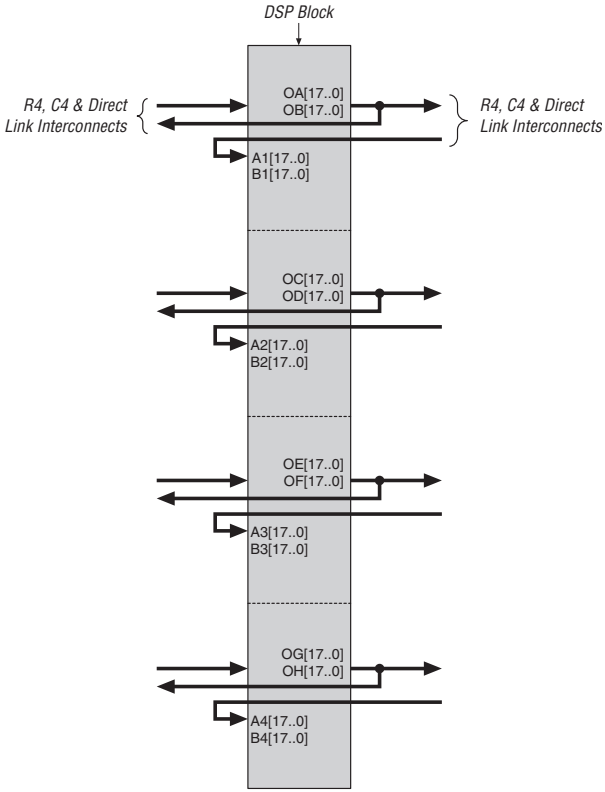

The Stratix II GX clock networks can be disabled (powered down) by both static and dynamic approaches. When a clock net is powered down, all the logic fed by the clock net is in an off-state, thereby reducing the overall power consumption of the device. The global and regional clock networks can be powered down statically through a setting in the configuration file (**.sof** or **.pof**). Clock networks that are not used are automatically powered down through configuration bit settings in the configuration file generated by the Quartus II software. The dynamic clock enable and disable feature allows the internal logic to control power up and down synchronously on `GCLK` and `RCLK` nets and `PLL_OUT` pins. This function is independent of the PLL and is applied directly on the clock network or `PLL_OUT` pin, as shown in Figures 2–67 through 2–69.

Enhanced and Fast PLLs

Stratix II GX devices provide robust clock management and synthesis using up to four enhanced PLLs and four fast PLLs. These PLLs increase performance and provide advanced clock interfacing and clock frequency synthesis. With features such as clock switchover, spread spectrum clocking, reconfigurable bandwidth, phase control, and reconfigurable phase shifting, the Stratix II GX device's enhanced PLLs provide you with complete control of clocks and system timing. The fast PLLs provide general purpose clocking with multiplication and phase shifting as well as high-speed outputs for high-speed differential I/O support. Enhanced and fast PLLs work together with the Stratix II GX high-speed I/O and advanced clock architecture to provide significant improvements in system performance and bandwidth.

Table 2–27. Global and Regional Clock Connections from Left Side Clock Pins and Fast PLL Outputs (Part 3 of 3)

Left Side Global and Regional Clock Network Connectivity	CLK0	CLK1	CLK2	CLK3	RCLK0	RCLK1	RCLK2	RCLK3	RCLK4	RCLK5	RCLK6	RCLK7
PLL 8 outputs												
c0			✓	✓					✓		✓	
c1			✓	✓						✓		✓
c2	✓	✓							✓		✓	
c3	✓	✓								✓		✓

Enhanced PLLs

Stratix II GX devices contain up to four enhanced PLLs with advanced clock management features. These features include support for external clock feedback mode, spread-spectrum clocking, and counter cascading. Figure 2–74 shows a diagram of the enhanced PLL.

Figure 2–74. Stratix II GX Enhanced PLL *Note (1)*

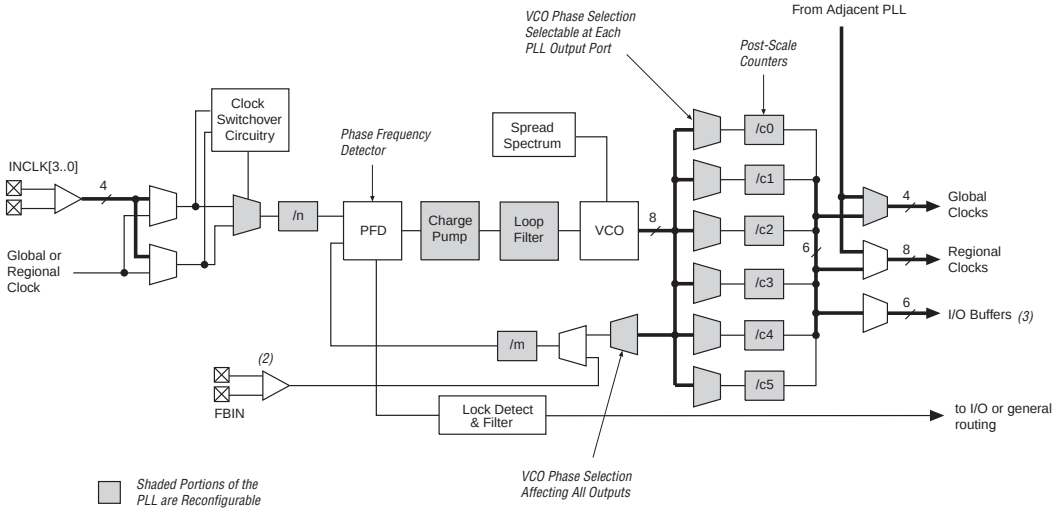

Notes to Figure 2–74:

(1) Each clock source can come from any of the four clock pins that are physically located on the same side of the device as the PLL.

(2) If the feedback input is used, you will lose one (or two, if FBIN is differential) external clock output pin.

(3) Each enhanced PLL has three differential external clock outputs or six single-ended external clock outputs.

(4) The global or regional clock input can be driven by an output from another PLL, a pin-driven dedicated global or regional clock, or through a clock control block provided the clock control block is fed by an output from another PLL or a pin-driven dedicated global or regional clock. An internally generated global signal cannot drive the PLL.

Fast PLLs

Stratix II GX devices contain up to four fast PLLs with high-speed serial interfacing ability. The fast PLLs offer high-speed outputs to manage the high-speed differential I/O interfaces. Figure 2–75 shows a diagram of the fast PLL.

Figure 2–82. Stratix II GX IOE in DDR Input I/O Configuration *Note (1)*

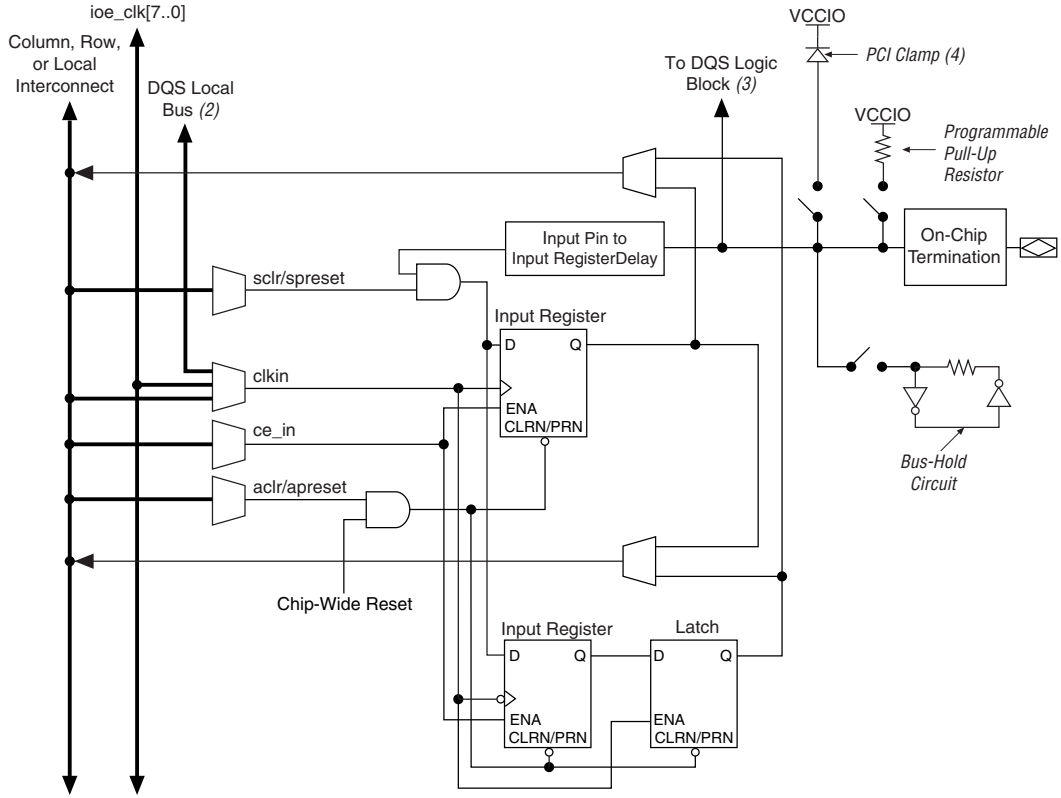

Notes to Figure 2–82:

(1) All input signals to the IOE can be inverted at the IOE.
(2) This signal connection is only allowed on dedicated DQ function pins.
(3) This signal is for dedicated DQS function pins only.
(4) The optional PCI clamp is only available on column I/O pins.

For high-speed source synchronous interfaces such as POS-PHY 4 and the Parallel RapidIO standard, the source synchronous clock rate is not a byte- or SERDES-rate multiple of the data rate. Byte alignment is necessary for these protocols because the source synchronous clock does not provide a byte or word boundary since the clock is one half the data rate, not one eighth. The Stratix II GX device's high-speed differential I/O circuitry provides dedicated data realignment circuitry for user-controlled byte boundary shifting. This simplifies designs while saving ALM resources. You can use an ALM-based state machine to signal the shift of receiver byte boundaries until a specified pattern is detected to indicate byte alignment.

Fast PLL and Channel Layout

The receiver and transmitter channels are interleaved such that each I/O bank on the left side of the device has one receiver channel and one transmitter channel per LAB row. Figure 2–90 shows the fast PLL and channel layout in the EP2SGX30C/D and EP2SGX60C/D devices. Figure 2–91 shows the fast PLL and channel layout in EP2SGX60E, EP2SGX90E/F, and EP2SGX130G devices.

Figure 2–90. Fast PLL and Channel Layout in the EP2SGX30C/D and EP2SGX60C/D Devices *Note (1)*

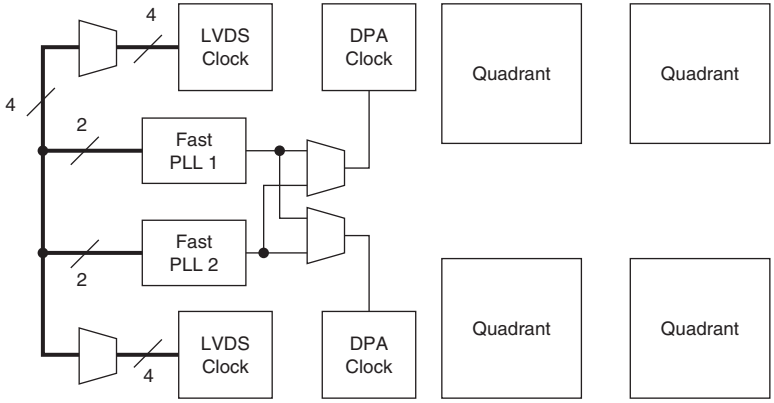

Note to Figure 2–90:

(1) See Table 2–38 for the number of channels each device supports.

(AS), passive serial (PS), passive parallel asynchronous (PPA), and JTAG configuration schemes. The Stratix II GX device's optimized interface allows microprocessors to configure it serially or in parallel and synchronously or asynchronously. The interface also enables microprocessors to treat Stratix II GX devices as memory and configure them by writing to a virtual memory location, making reconfiguration easy.

In addition to the number of configuration methods supported, Stratix II GX devices also offer the design security, decompression, and remote system upgrade features. The design security feature, using configuration bitstream encryption and advanced encryption standard (AES) technology, provides a mechanism to protect designs. The decompression feature allows Stratix II GX FPGAs to receive a compressed configuration bitstream and decompress this data in real-time, reducing storage requirements and configuration time. The remote system upgrade feature allows real-time system upgrades from remote locations of Stratix II GX designs. For more information, refer to the "Configuration Schemes" on page 3–6.

Operating Modes

The Stratix II GX architecture uses SRAM configuration elements that require configuration data to be loaded each time the circuit powers up. The process of physically loading the SRAM data into the device is called configuration. During initialization, which occurs immediately after configuration, the device resets registers, enables I/O pins, and begins to operate as a logic device. The I/O pins are tri-stated during power-up, and before and during configuration. Together, the configuration and initialization processes are called command mode. Normal device operation is called user mode.

SRAM configuration elements allow you to reconfigure Stratix II GX devices in-circuit by loading new configuration data into the device. With real-time reconfiguration, the device is forced into command mode with a device pin. The configuration process loads different configuration data, re-initializes the device, and resumes user-mode operation. You can perform in-field upgrades by distributing new configuration files either within the system or remotely.

The `PORSEL` pin is a dedicated input used to select power-on reset (POR) delay times of 12 ms or 100 ms during power up. When the `PORSEL` pin is connected to ground, the POR time is 100 ms. When the `PORSEL` pin is connected to V_{CC}, the POR time is 12 ms.

4. DC and Switching Characteristics

SIIGX51006-4.6

Operating Conditions

Stratix® II GX devices are offered in both commercial and industrial grades. Industrial devices are offered in -4 speed grade and commercial devices are offered in -3 (fastest), -4, and -5 speed grades.

Tables 4–1 through 4–51 provide information on absolute maximum ratings, recommended operating conditions, DC electrical characteristics, and other specifications for Stratix II GX devices.

Absolute Maximum Ratings

Table 4–1 contains the absolute maximum ratings for the Stratix II GX device family.

Table 4–1. Stratix II GX Device Absolute Maximum Ratings *Notes (1), (2),(3)*

Symbol	Parameter	Conditions	Minimum	Maximum	Unit
V_{CCINT}	Supply voltage	With respect to ground	–0.5	1.8	V
V_{CCIO}	Supply voltage	With respect to ground	–0.5	4.6	V
V_{CCPD}	Supply voltage	With respect to ground	–0.5	4.6	V
V_I	DC input voltage *(4)*		–0.5	4.6	V
I_{OUT}	DC output current, per pin		–25	40	mA
T_{STG}	Storage temperature	No bias	–65	150	C
T_J	Junction temperature	BGA packages under bias	–55	125	C

Notes to Table 4–1:

(1) See the *Operating Requirements for Altera Devices Data Sheet* for more information.

(2) Conditions beyond those listed in Table 4–1 may cause permanent damage to a device. Additionally, device operation at the absolute maximum ratings for extended periods of time may have adverse affects on the device.

(3) Supply voltage specifications apply to voltage readings taken at the device pins, not at the power supply.

(4) During transitions, the inputs may overshoot to the voltage shown in Table 4–2 based upon the input duty cycle. The DC case is equivalent to 100% duty cycle. During transitions, the inputs may undershoot to –2.0 V for input currents less than 100 mA and periods shorter than 20 ns.

Table 4–13. Typical Pre-Emphasis (First Post-Tap), Note (1) (Part 2 of 2)

V_{CCH} TX = 1.5 V	First Post Tap Pre-Emphasis Level											
V_{OD} Setting (mV)	1	2	3	4	5	6	7	8	9	10	11	12
1400				20%	26%	33%	41%	51%	58%	67%	77%	86%

Note to Table 4–13:
(1) Applicable to data rates from 600 Mbps to 6.375 Gbps. Specification is for measurement at the package ball.

Table 4–14. Typical Pre-Emphasis (First Post-Tap), Note (1)

V_{CCH} TX = 1.5 V	First Post Tap Pre-Emphasis Level											
V_{OD} Setting (mV)	1	2	3	4	5	6	7	8	9	10	11	12
	TX Term = 120 Ω											
240	45%											
480		41%	76%	114%	166%	257%	355%					
720		23%	38%	55%	84%	108%	137%	179%	226%	280%	405%	477%
960		15%	24%	36%	47%	64%	80%	97%	122%	140%	170%	196%
1200			18%	22%	30%	41%	51%	63%	77%	86%	98%	116%

Note to Table 4–14:
(1) Applicable to data rates from 600 Mbps to 6.375 Gbps. Specification is for measurement at the package ball.

Table 4–15. Typical Pre-Emphasis (First Post-Tap), Note (1) (Part 1 of 2)

V_{CCH} TX = 1.5 V	First Post Tap Pre-Emphasis Level											
V_{OD} Setting (mV)	1	2	3	4	5	6	7	8	9	10	11	12
	TX Term = 150 Ω											
300	32%	85%										

Table 4–19. Stratix II GX Transceiver Block AC Specification Notes (1), (2), (3) (Part 19 of 19)

Symbol/ Description	Conditions	-3 Speed Commercial Speed Grade			-4 Speed Commercial and Industrial Speed Grade			-5 Speed Commercial Speed Grade			Unit
		Min	Typ	Max	Min	Typ	Max	Min	Typ	Max	

Notes to Table 4–19:

(1) Dedicated REFCLK pins were used to drive the input reference clocks.
(2) Jitter numbers specified are valid for the stated conditions only.
(3) Refer to the protocol characterization documents for detailed information.
(4) HiGig configuration is available in a -3 speed grade only. For more information, refer to the *Stratix II GX Transceiver Architecture Overview* chapter in volume 2 of the *Stratix II GX Device Handbook*.
(5) Stratix II GX transceivers meet CEI jitter generation specification of 0.3 UI for a V_{OD} range of 400 mV to 1000 mV.
(6) The Sinusoidal Jitter Tolerance Mask is defined only for low voltage (LV) variant of CPRI.
(7) The jitter numbers for SONET/SDH are compliant to the GR-253-CORE Issue 3 Specification.
(8) The jitter numbers for Fibre Channel are compliant to the FC-PI-4 Specification revision 6.10.
(9) The jitter numbers for XAUI are compliant to the IEEE802.3ae-2002 Specification.
(10) The jitter numbers for PCI Express are compliant to the PCIe Base Specification 2.0.
(11) The jitter numbers for Serial RapidIO are compliant to the RapidIO Specification 1.3.
(12) The jitter numbers for GIGE are compliant to the IEEE802.3-2002 Specification.
(13) The jitter numbers for HiGig are compliant to the IEEE802.3ae-2002 Specification.
(14) The jitter numbers for (OIF) CEI are compliant to the OIF-CEI-02.0 Specification.
(15) The jitter numbers for CPRI are compliant to the CPRI Specification V2.1.
(16) The HD-SDI and 3G-SDI jitter numbers are compliant to the SMPTE292M and SMPTE424M Specifications.
(17) The Fibre Channel transmitter jitter generation numbers are compliant to the specification at β_T interoperability point.
(18) The Fibre Channel receiver jitter tolerance numbers are compliant to the specification at β_R interoperability point.

Table 4–20 provides information on recommended input clock jitter for each mode.

Table 4–20. Recommended Input Clock Jitter (Part 1 of 2)

Mode	Reference Clock (MHz)	Vectron LVPECL XO Type/Model	Frequency Range (MHz)	RMS Jitter (12 kHz to 20 MHz) (ps)	Period Jitter (Peak to Peak) (ps)	Phase Noise at 1 MHz (dB c/Hz)
PCI-E	100	VCC6-Q/R	10 to 270	0.3	23	-149.9957
(OIF) CEI PHY	156.25	VCC6-Q/R	10 to 270	0.3	23	-146.2169
	622.08	VCC6-Q	270 to 800	2	30	Not available
GIGE	62.5	VCC6-Q/R	10 to 270	0.3	23	-149.9957
	125	VCC6-Q/R	10 to 270	0.3	23	-146.9957
XAUI	156.25	VCC6-Q/R	10 to 270	0.3	23	-146.2169

Table 4–20. Recommended Input Clock Jitter (Part 2 of 2)

Mode	Reference Clock (MHz)	Vectron LVPECL XO Type/Model	Frequency Range (MHz)	RMS Jitter (12 kHz to 20 MHz) (ps)	Period Jitter (Peak to Peak) (ps)	Phase Noise at 1 MHz (dB c/Hz)
SONET/SDH OC-48	77.76	VCC6-Q/R	10 to 270	0.3	23	-149.5476
	155.52	VCC6-Q/R	10 to 270	0.3	23	-149.1903
	311.04	VCC6-Q	270 to 800	2	30	Not available
	622.08	VCC6-Q	270 to 800	2	30	Not available
SONET/SDH OC-12	62.2	VCC6-Q/R	10 to 270	0.3	23	-149.6289
	311	VCC6-Q	270 to 800	2	30	Not available
	77.76	VCC6-Q/R	10 to 270	0.3	23	-149.5476
	155.52	VCC6-Q/R	10 to 270	0.3	23	-149.1903
	622.08	VCC6-Q	270 to 800	2	30	Not available

Tables 4–21 and 4–22 show the transmitter and receiver PCS latency for each mode, respectively.

Table 4–21. PCS Latency (Part 1 of 2) Note (1)

Functional Mode	Configuration	Transmitter PCS Latency					
		TX PIPE	TX Phase Comp FIFO	Byte Serializer	TX State Machine	8B/10B Encoder	Sum *(2)*
XAUI		-	2-3	1	0.5	0.5	4-5
PIPE	×1, ×4, ×8 8-bit channel width	1	3-4	1	-	1	6-7
	×1, ×4, ×8 16-bit channel width	1	3-4	1	-	0.5	6-7
GIGE		-	2-3	1	-	1	4-5
SONET/SDH	OC-12	-	2-3	1	-	1	4-5
	OC-48	-	2-3	1	-	0.5	4-5
	OC-96	-	2-3	1	-	0.5	4-5
(OIF) CEI PHY		-	2-3	1	-	0.5	4-5
CPRI *(3)*	614 Mbps, 1.228 Gbps	-	2	1	-	1	4
	2.456 Gbps	-	2-3	1	-	1	4-5

Table 4–29. 2.5-V LVDS I/O Specifications

Symbol	Parameter	Conditions	Minimum	Typical	Maximum	Unit
V_{CCIO}	I/O supply voltage for left and right I/O banks (1, 2, 5, and 6)		2.375	2.5	2.625	V
V_{ID}	Input differential voltage swing (single-ended)		100	350	900	mV
V_{ICM}	Input common mode voltage		200	1,250	1,800	mV
V_{OD}	Output differential voltage (single-ended)	R_L = 100 Ω	250		450	mV
V_{OCM}	Output common mode voltage	R_L = 100 Ω	1.125		1.375	V
R_L	Receiver differential input discrete resistor (external to Stratix II GX devices)		90	100	110	Ω

Table 4–30. 3.3-V LVDS I/O Specifications

Symbol	Parameter	Conditions	Minimum	Typical	Maximum	Unit
V_{CCIO} *(1)*	I/O supply voltage for top and bottom PLL banks (9, 10, 11, and 12)		3.135	3.3	3.465	V
V_{ID}	Input differential voltage swing (single-ended)		100	350	900	mV
V_{ICM}	Input common mode voltage		200	1,250	1,800	mV
V_{OD}	Output differential voltage (single-ended)	R_L = 100 Ω	250		710	mV
V_{OCM}	Output common mode voltage	R_L = 100 Ω	840		1,570	mV
R_L	Receiver differential input discrete resistor (external to Stratix II GX devices)		90	100	110	Ω

Note to Table 4–30:

(1) The top and bottom clock input differential buffers in I/O banks 3, 4, 7, and 8 are powered by V_{CCINT}, not V_{CCIO}. The PLL clock output/feedback differential buffers are powered by `VCC_PLL_OUT`. For differential clock output/feedback operation, connect `VCC_PLL_OUT` to 3.3 V.

Duty Cycle Distortion

Duty cycle distortion (DCD) describes how much the falling edge of a clock is off from its ideal position. The ideal position is when both the clock high time (CLKH) and the clock low time (CLKL) equal half of the clock period (T), as shown in Figure 4–11. DCD is the deviation of the non-ideal falling edge from the ideal falling edge, such as D1 for the falling edge A and D2 for the falling edge B (see Figure 4–11). The maximum DCD for a clock is the larger value of D1 and D2.

Figure 4–11. Duty Cycle Distortion

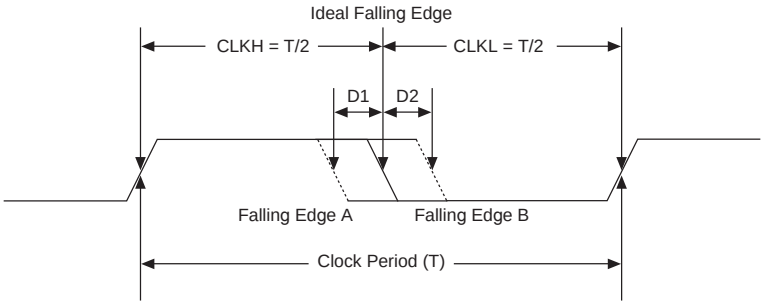

DCD expressed in absolution derivation, for example, D1 or D2 in Figure 4–11, is clock-period independent. DCD can also be expressed as a percentage, and the percentage number is clock-period dependent. DCD as a percentage is defined as:

(T/2 – D1) / T (the low percentage boundary)

(T/2 + D2) / T (the high percentage boundary)

DCD Measurement Techniques

DCD is measured at an FPGA output pin driven by registers inside the corresponding I/O element (IOE) block. When the output is a single data rate signal (non-DDIO), only one edge of the register input clock (positive or negative) triggers output transitions (Figure 4–12). Therefore, any DCD present on the input clock signal or caused by the clock input buffer or different input I/O standard does not transfer to the output signal.

Table 4–102. Maximum DCD for DDIO Output on Column I/O Pins Without PLL in the Clock Path for -3 Devices (Part 2 of 2) *Note (1)*

Maximum DCD (ps) for DDIO Column Output I/O Standard	Input IO Standard (No PLL in the Clock Path)					Unit
	TTL/CMOS		SSTL-2	SSTL/HSTL	HSTL12	
	3.3/2.5V	1.8/1.5V	2.5V	1.8/1.5V	1.2V	
SSTL-18 Class II	140	260	70	70	70	ps
1.8-V HSTL Class I	150	270	60	60	60	ps
1.8-V HSTL Class II	150	270	60	60	60	ps
1.5-V HSTL Class I	150	270	55	55	55	ps
1.5-V HSTL Class II	125	240	85	85	85	ps
1.2-V HSTL	240	360	155	155	155	ps
LVPECL	180	180	180	180	180	ps

(1) Table 4–102 assumes the input clock has zero DCD.

Table 4–103. Maximum DCD for DDIO Output on Column I/O Pins Without PLL in the Clock Path for -4 and -5 Devices *Note (1)*

Maximum DCD (ps) for DDIO Column Output I/O Standard	Input IO Standard (No PLL in the Clock Path)				Unit
	TTL/CMOS		SSTL-2	SSTL/HSTL	
	3.3/2.5V	1.8/1.5V	2.5V	1.8/1.5V	
3.3-V LVTTL	440	495	170	160	ps
3.3-V LVCMOS	390	450	120	110	ps
2.5 V	375	430	105	95	ps
1.8 V	325	385	90	100	ps
1.5-V LVCMOS	430	490	160	155	ps
SSTL-2 Class I	355	410	85	75	ps
SSTL-2 Class II	350	405	80	70	ps
SSTL-18 Class I	335	390	65	65	ps
SSTL-18 Class II	320	375	70	80	ps
1.8-V HSTL Class I	330	385	60	70	ps
1.8-V HSTL Class II	330	385	60	70	ps
1.5-V HSTL Class I	330	390	60	70	ps
1.5-V HSTL Class II	330	360	90	100	ps
LVPECL	180	180	180	180	ps

(1) Table 4–103 assumes the input clock has zero DCD.

Table 4–110. Enhanced PLL Specifications (Part 2 of 2)					
Name	**Description**	**Min**	**Typ**	**Max**	**Unit**
f_{VCO}	PLL VCO operating range for –3 and –4 speed grade devices	300		1,040	MHz
	PLL VCO operating range for –5 speed grade devices	300		840	MHz
f_{SS}	Spread-spectrum modulation frequency	100		500	kHz
% spread	Percent down spread for a given clock frequency	0.4	0.5	0.6	%
t_{PLL_PSERR}	Accuracy of PLL phase shift			±30	ps
t_{ARESET}	Minimum pulse width on `areset` signal.	10			ns
$t_{ARESET_RECONFIG}$	Minimum pulse width on the `areset` signal when using PLL reconfiguration. Reset the PLL after `scandone` goes high.	500			ns
$t_{RECONFIGWAIT}$	The time required for the wait after the reconfiguration is done and the areset is applied.			2	us

(1) This is limited by the I/O f_{MAX}. See Tables 4–91 through 4–95 for the maximum.
(2) If the counter cascading feature of the PLL is utilized, there is no minimum output clock frequency.

Table 4–111. Fast PLL Specifications (Part 1 of 2)					
Name	**Description**	**Min**	**Typ**	**Max**	**Unit**
f_{IN}	Input clock frequency (for -3 and -4 speed grade devices)	16		717	MHz
	Input clock frequency (for -5 speed grade devices)	16		640	MHz
f_{INPFD}	Input frequency to the PFD	16		500	MHz
f_{INDUTY}	Input clock duty cycle	40		60	%
$t_{INJITTER}$	Input clock jitter tolerance in terms of period jitter. Bandwidth ≤2 MHz		0.5		ns (p-p)
	Input clock jitter tolerance in terms of period jitter. Bandwidth > 0.2 MHz		1.0		ns (p-p)